Networks Buyer's Guide

digital

Annual Edition 1992 - 1993

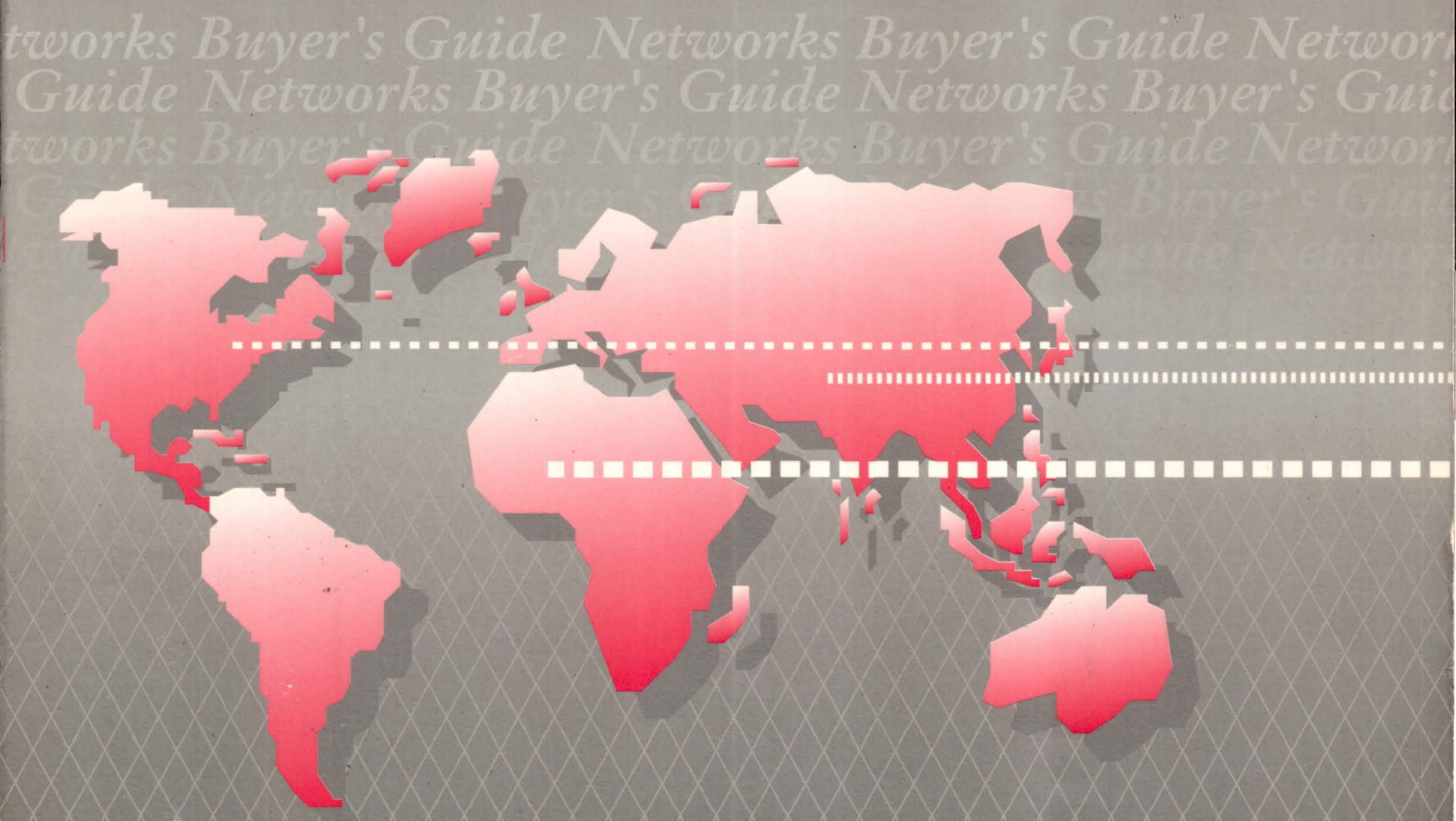

Map to the Guide

Background Information	Product Information	Configuration Information	Ordering Information
Presents a general overview of networking and communications concepts and architecture.	*Describes product features and capabilities.*	*Describes how products can be linked into networks.*	*Lists the codes required to purchase specific variations of a product.*

Contents
Ordering Information
Suggestions for Using This Guide
What's New
How to Order from this Guide
Locating Products
New Products

Overview

Section 1
Introduction

Architecture
Overview

Products

Section 2
Connectivity: 802.3/Ethernet Local Area Networks

802.3/Ethernet
OPEN DECconnect
Twisted-Pair
ThinWire Repeaters
Communications Controllers
Communications Servers
Communications Routers, Bridges, and X.25 Gateway Services

Section 3
Connectivity: FDDI

FDDI Overview
DECconcentrator Family
DECbridge Family
FDDI Network Management
DEC FDDIcontroller Family

Section 4
Connectivity: Communications Hardware

Communications Controllers
Modems
Communications Cables

Section 5
Interoperability: Communications Software

Communications Software
802.5 Token Ring Products
Digital IBM Transport Products
Access Routines and Programming Interfaces
IBM Interconnect Third-Party Solutions
OSI Products
File Transfer and Terminal Emulation Products

Section 6
Network Personal Computing

Personal Computing Overview
PATHWORKS Client Software
PATHWORKS Server Software
PATHWORKS Packaged Servers
Personal Computer Maul Solutions
LAN-Based Applications
PC Networking Hardware

Section 7
Distributed Applications

DECnet System Services
Business Communications
Electronic Messaging

Section 8
Enterprise Management Solutions

Management Products
DECmcc Family of Management Products
Additional Network Management Products
Network Security

Section 9
Network Services

Overview and Courses

Appendices and Index

Appendix A — Network Configuration Guidelines
Appendix B — Product Performance Guidelines
Appendix C — Environmental Specifications
Appendix D — Related Documentation
Glossary
Index

To locate the information in this map, refer to the Contents beginning on page v.

Networks Buyer's Guide

digital

Annual Edition 1992 – 1993

Networks

Copyright © 1992, Digital Equipment Corporation. All rights reserved.

Digital believes the information in this publication is accurate as of its publication date; such information is subject to change without notice. Digital is not responsible for any inadvertent errors.

Products and product availability may differ outside the United States.

ADVANTAGE-NETWORKS, applicationDEC, ALL-IN-1, CDD/Plus, CDA, DATATRIEVE, DEBET, DEC, DEC ACCESSWORKS, DEC EtherWORKS, DEC GKS, DEC MAILworks, DEC VTX, DECagent 90, DECathena, DECbridge, DECconnect, DECdecision, DECdx, DECforms, DECimage, DEClaser, DECmail, DECmcc, DECmux, DECNA, DECnet, DECnet-DOS, DECnet/E, DECnet-MicroRSX, DECnet-RT, DECNIS, DEComni, DECpresent, DECquery, DECrouter, DECSA, DECserver, DECservice, DECsite, DECstart, DECstart PLUS, DECstation, DECsupport, DECsystem, DECtp, DECUS, DECwindows, DECwrite, DELNI, DELUA, DEMPR, DEQNA, DESTA, DHB32, DNA, EDE, EDT, EtherWORKS, eXcursion, HUBwatch, KXJ11, LAT, METROWAVE, MicroPDP-11, MicroPower/Pascal, Micro/RSTS, Micro/RSX, MicroVAX, MicroVMS, MOBILIZER, MUXserver, NETmon, NETplan, NETstart, NETsupport, OMNIBUS, PATHWORKS, PDP, PrintServer, Q-bus, Rdb/VMS, ReGIS, RSTS/E, RSX-11M, RSX-11M-PLUS, RSX-11S, RT-11, Scholar, SQL Multimedia, TEAMDATA, TeamLinks, TeamRoute, ThinWire, TOPS-10, TOPS-20, TURBOchannel, ULTRIX, UNIBUS, VAX, VAX DATATRIEVE, VAX Ethernim, VAX GKS, VAX Notes, VAX RALLY, VAX SQL, VAXBI, VAXcluster, VAXELN, VAXft, VAXmate, VAXPAC, VAXserver, VAXstation, VIDA, VMS, WPS-PLUS, and the DIGITAL logo are trademarks of Digital Equipment Corporation.

3Com, IE2 and IE4 Etherlink are registered trademarks of 3Com Corporation.
AT&T and ACCUNET are registered trademarks of American Telephone & Telegraph Company.
Amphenol 960 is a trademark of Amphenol Corporation.
Apollo and Domain are registered trademarks of Apollo Computer, Inc., a subsidiary of Hewlett-Packard Company.
Apple, AppleShare, AppleTalk, LaserWriter, LocalTalk, Macintosh, andMacTerminal are registered trademarks of Apple Computer, Inc.
Banyan is a registered trademark of Banyan Systems, Inc.
cc:mail is a registered trademark of cc:mail, Inc.
Chipcom and Ethermodem are trademarks of Chipcom Corporation.
CMU-TEK is a registered trademark of Carnegie Mellon University.
COMPAQ and DESKPRO are registered trademarks of Compaq Computer Corporation.
CRAY is a registered trademark of Cray Research Inc.
Data Products is a registered trademark of Data Products Corp.
dBASE is a trademark of Ashton–Tate Corp.
Epson is a registered trademark of Epson America, Inc.
FastPath is a registered trademark of Kinetics, Inc.
FUSION is a trademark of Network Research Corporation.
Galaxy is a trademark of R.S. Means Company.
Gandalph is a trademark of Gandalph Data Communications.
Hewlett-Packard, HP, and PCL are registered trademarks of Hewlett–Packard Company.
IBM, NetView, OS/2, Personal Computer AT, PROFS, and PS/2 are registered trademarks and CICS, DB2, DISOSS, NETBIOS, PC-DOS, PC/XT, Personal Services, SNADS, and TSO, are trademarks of International Business Machines Corporation.
Intel is a trademark of Intel Corporation.
Jnet and Joiner are registered trademarks of Joiner Associates, Inc.

KERMIT is copyright 1985, Trustees of Columbia University.
KEYpak is a registered trademark of Keyword Office Technologies, Inc.
LinkWare is a registered trademark of the Linkware Corporation.
Lotus 1–2–3 is a registered trademark of Lotus Development Corp.
M/A-COM is a trademark of M/A-COM, Inc.
MCI Mail is a registered trademark of MCI Communications Corporation.
MICOM, NI5010-1, and NI5010-2 are trademarks of MICOM System, Inc.
MICROCOM is a registered trademark of Microcom, Inc.
Motif and OSF/Motif are Registered trademarks of the Open Systems Foundation.
MS, MS-DOS, and PowerPoint are registered trademarks, and Windows is a trademark of Microsoft Corporation.
Multinet is a trademark of SRI International and TGV, Inc.
NET/MASTER is a trademark of System Center, Inc.
NetWare is a registered trademark of Novell, Inc.
Northern Telecom is a registered trademark of Northern Telecom, Ltd.
Olivetti is a registered trademark of Ing C. Olivetti.
Open Look and UNIX are registered trademarks of UNIX Systems Labs, Inc.
ORACLE is a registered trademark of Oracle Corp.
PacerPrint is a trademark of Pacer Software, Inc.
PC-Interface and PC Xsight are registered trademarks of Locus Computing Corporation.
poly-BSC/RJE, poly-XFR, poly-COM, and poly-BSC/3270 are trademarks of Polygon Associates, Inc.
PostScript is a registered trademark of Adobe Systems, Inc.
PRISM is a trademark of Advanced Systems Concepts, Inc.
PVC is a registered trademark of Robert S. Galen, M.D.
Retix is a registered trademark of Retix Corp.
Rolm is a registered trademark of Rolm Corp.
SCO is a registered trademark of Santa Cruz Operation, Inc.
Siemens is a registered trademark of Siemens Akatiengesellschaft.
SINEC and Siemens are registered trademarks of Siemens AG.
SPARC and Sun are registered trademarks of Sun Microsystems, Inc.
StrataCom is a registered trademark of StrataCom, Inc.
Sytek and LocalNet 20 are trademarks of Sytek, Inc.
Teflon is a registered trademark of E.I. duPont de Nemours and Company.
TEKTRONIX 4010/4014, and Tek are registered trademarks of Tektronix, Inc.
Telenet is a registered trademark of GTE Telenet Communication Corporation.
Toshiba is a registered trademark of Kabushiki Kaisha Toshiba.
TransLAN, TransPATH and Vitalink are registered Trademarks of Vitalink Communications Corp.
TYMNET is a registered trademark of British Telecommunications PLC
UNISYS is a registered trademark of UNISYS Corporation.
UNIX is a registered trademark of UNIX System Laboratories, Inc.
Wang is a trademark of Wang Laboratories, Inc.
WIN/TCP and WIN/TCP-DDN are trademarks of the Wollongong Group.
Xerox is a registered trademark of Xerox Corp.
Zenith is a registered trademark of Zenith Data Systems Corp.

Contents v

Ordering Information xxiii
DECdirect Europe xxiv

Suggestions for Using this Guide xxvi

What's New to the Networks Buyer's Guide xxviii
Open Advantage: A New Era in Digital History xxviii
Innovations to Buyer's Guide xxviii
New Products xxix

Key to Symbols Used in This Guide xxxvii

Section 1 Introduction to Digital's Networks

Introduction 1-1
Digital Network Architecture 1-3
The Evolution of Digital's Networks 1-6
What People Expect from Networks Today 1-7
Digital's Strategic Networking Vision 1-7
Future Directions 1-9

Building the Network 1-10
Analyzing an Enterprise's Needs 1-10
Digital's Networking Products 1-11
An Example of a Network Solution Using Open Systems Interconnect 1-12
Network Management 1-20

Section 2 Connectivity: 802.3/Ethernet Local Area Network

802.3/Ethernet 2-1
IEEE 802.3 Compliance 2-1
802.3/Ethernet Advantages 2-1
802.3/Ethernet Transmission Technology 2-1
Ethernet Media Options 2-2
IEEE 802.3/Ethernet Communications Controllers 2-5
Servers 2-5
Extended Local Area Networks 2-7
Network Security 2-9
802.3/Ethernet Advantages 2-9

Typical 802.3/Ethernet Applications 2-10
Office Applications 2-10
Factory Applications 2-11
CAD/CAM Applications 2-12
Hospital Applications 2-13
Laboratory Applications 2-15
University Applications 2-16

802.3/Ethernet Products **2-17**
Baseband IEEE 802.3/Ethernet Transceiver (H4005) 2-19
Local Network Interconnect (DELNI) 2-20
Standard Baseband 802.3/Ethernet Cable 2-24
Fiber Optic Cable 2-25
Fiber Optic Connectors 2-25
Transceiver Cable 2-25
Office Transceiver Cable 2-26
ThinWire 802.3/Ethernet Cable 2-27
Standard 802.3/Ethernet Cable Connectors and Terminators 2-28

802.3/Ethernet Twisted-Pair Products **2-30**
Unshielded Twisted-Pair 10BaseT Connectivity 2-30
DECrepeater 90T 2-31
DECrepeater 350 (DETPR) 2-32
DEC EtherWORKS Turbo/TP (DE201) 2-32
Unshielded Twisted-Pair Media Access Unit (H3350) 2-33
802.3/Ethernet Adapters for IBM Shielded Twisted-Pair Cabling ... 2-35

802.3/Ethernet ThinWire Products **2-36**
Overview 2-36
DECrepeater 90C 2-36
ThinWire Ethernet Multiport Repeater (DEMPR) 2-38
ThinWire Ethernet Singleport Repeater (DESPR) 2-39

Other IEEE 802.3/Ethernet Repeaters **2-42**
DECrepeater 200 2-42
Fiber Optic IEEE 802.3/Ethernet Repeater (DEREN) 2-42
ThinWire Ethernet Station Adapter DECextender 204 (DESTA) 2-46

OPEN DECconnect Overview **2-47**
New OPEN DECconnect Solutions 2-47
Structured Wiring: Planning for the Future 2-48
Advantages of Structured Wiring 2-48
Structured vs Unstructured Cabling 2-48
EIA/TIA Standard 2-49
OPEN DECconnect Structured Wiring Architecture 2-50
OPEN DECconnect Product Overview 2-50
OPEN DECconnect Fiber Optic Network 2-52
Fiber Optic Advantages 2-52
Fiber Optic Structured Wiring Strategy 2-53
Fiber Optic Components 2-54
OPEN DECconnect Horizontal Structured Wiring 2-54
Unshielded Twisted-Pair Cabling 2-55
Shielded Twisted-Pair Cabling (IBM) 2-56
ThinWire 802.3/Ethernet Cabling 2-56
Standard Thick Wire Coaxial Cabling 2-58

Broadband 2-58
EIA-423 Signaling 2-58
Terminal Connections 2-58

OPEN DECconnect Products 2-59
OPEN DECconnect Communication Outlets 2-59
Fiber Optic OPEN DECconnect Products 2-61
Horizontal/Copper Wiring Products for Work Area and Horizontal Subsystems 2-63
OPEN DECconnect Optional Connectors 2-67
OPEN DECconnect Terminal-Connection Components 2-68
Services from Network Integration Services 2-71

Wiring Hubs 2-72
WorkGroup Family of Networking Products 2-72
DEChub 90 2-73
DECagent 90, HUBwatch for Windows HUBwatch for DECmcc MSU 2-74

Fiber Optic 802.3/Ethernet Products 2-77
Fiber Optic Ethernet System 2-77

802.3/Ethernet Communications Controllers 2-79

802.3/Ethernet System Controllers 2-82
Digital Ethernet VAXBI to NI Adapter (DEBNA) 2-82
DEC LAN Controller 200 (DEBNI) 2-83
Digital Ethernet Large-Scale-Integration Unibus Adapter (DELUA) . 2-84
Digital Ethernet LSI Q-Bus Communications Controller (DELQA) . 2-85
Digital Ethernet Station Q-Bus Communications Controller (DESQA) 2-86
DESVA 2-87
DEC TRNcontroller 100 (DEQRA) 2-88

Extended 802.3/Ethernet Local Area Network Products 2-90
Introduction 2-90
DECbridge 90 2-92
LAN Bridge 150 (DEBET) 2-94
LAN Bridge 200 (DEBAM) 2-98
METROWAVE Bridge METROWAVE 150/200 2-100
TransLAN Bridges: TransLAN 320/335/350, TransLAN III 2-104

802.3/Ethernet Communications Servers 2-108
Terminal Server Overview 2-110
DECserver 700 2-113
DECserver 90TL Telnet/LAT Terminal Server 2-116
DECserver 90L+ 2-119
DECserver 250 2-121
MUXserver 320/380 and DECmux 300 Remote Terminal Server ... 2-123

Terminal Server Manager (TSM) 2-128
DEC Commserver (DSPAA/DSPAB) 2-130

802.3/Ethernet Special Purpose Servers 2-134
DEC ACCESSWORKS 2-134
InfoServer 150/150VXT 2-139
PrintServer Family 2-141

Routers, Bridges, and X.25 Gateway Services 2-148
Introduction 2-148
DEC MicroServer-SP (DEMSB) 2-155
DEC X25gateway 100 2-156
DEC X25router 100 2-158
DECrouter 250 (DSRVR) Hardware 2-159
DEC WANrouter 250 (Multiprotocol Router) 2-159
DECrouter 250 (Phase IV Router) 2-162
DEC MicroServer (DEMSA) 2-163
DEC WANrouter 500 (Multiprotocol Router) 2-163
DEC X25gateway 500 2-166
DEC X25router 2000 2-169
DECNIS 600 2-171
DECNIS 500 2-176
DEC ISDNrouter 100 2-178
TransPATH 335, TransPATH 350 2-179

Section 3 Connectivity: FDDI

FDDI Overview 3-1
Digital's FDDI Product Set 3-5
Software Upgrade Packages for Installed FDDI Products 3-6
Automatic Subscription Software Update Service for Digital's FDDI Products 3-6

FDDI DECconcentrator Family 3-8
DECconcentrator 500 3-8
DECconcentrator 500 Software Enhancements 3-21

FDDI DECbridge Family 3-26
DECbridge 5xx, DECbridge 6xx 3-26

FDDI Network Management 3-40

FDDIcontroller Family 3-41
DEC FDDIcontroller/EISA (DEFEA) 3-41
DEC FDDIcontroller 700, DEC FDDIcontroller 700-C 3-43
DEC FDDIcontroller 400 3-47

Section 4 Connectivity: Communications Hardware

Overview **4-1**
Communications Controllers 4-2

Communications Hardware Ordering Information **4-3**
Modules and Cabinet Kits 4-3
External Cables 4-3

VAXBI Communications Controllers **4-4**
DHB32 4-5
DMB32 4-7
DEC WANcontroller 220 4-10

VAXft Communications Controllers **4-12**
DEC WANcontroller 620 4-12

TURBOchannel Communications Controllers **4-14**
DEC WANcontroller 720 4-14

Q-bus Communications Controllers **4-16**
CX Communications Controllers 4-18
DHF11 4-20
DHQ11 4-22
DLVJ1 4-25
DPV11 4-26
DSV11 4-27
DZQ11 4-30
DEC ISDNcontroller 100 (DIV32) 4-31
DMV11 4-34
KMV1A 4-36

MicroVAX 2000 Communications Controllers **4-39**
DHT32 4-40
DST32 4-41
DSH32 4-42
DSW41-AA, DSW42-AA Synchronous Controllers 4-44
DHW41-xx, DHW42-xx Asynchronous Multiplexers 4-45

Communications Processors **4-47**
KXT11-AB 4-47
KXT11-CA 4-47
KXJ11-CA 4-48

Transmission Resource Management Systems **4-50**
StrataCom IPX Transmission Resource Manager 4-50

Modems **4-55**
Introduction 4-55
Private Leased Telecommunications Network (PLTN) Modems 4-58

Scholar Plus Modem 4-58
DECmodem V32 Modem 4-59
DECmodem V32 Rackmount 4-61
Multiple Modem (Rackmount) Enclosure 4-62
Data Service Unit/Channel Service Unit (DSU/CSU) 4-62

Communications Cables 4-65

Section 5 Connectivity: Communications Software

Introduction 5-1
Software Ordering Information 5-1

DECnet/OSI Communications Software 5-4
Introduction 5-4
DECnet/OSI Product Capabilities 5-8
DECnet-VAX 5-10
DECnet-VAX V5.4 Extensions 5-11
DECnet/OSI for VMS V5.5 5-13
DECnet with VAXELN 5-15
DECnet/OSI for ULTRIX V5.1 5-17
DECnet for SCO UNIX V1.1 5-20
DECnet RSX 5-21
DECnet-DOS 5-22
DECnet for OS/2 5-22
DECnet/E 5-24
DECnet-RT 5-24

Digital Internet Communications Software 5-25
Internet Communications with VAXELN 5-25
ULTRIX-TCP/IP and NFS 5-25
DEC TCP/IP Services for VMS 5-27
WIN/TCP, WIN/TCP DDN and WIN/TCP SCI 5-29

802.5/Token Ring Products 5-31
Overview 5-31
DEC TRNcontroller 100 5-35
ProNET-4/16 AT Network Interface Card 5-36
ProNET-4/16 Micro Channel Interface Cards 5-37
ProNET-4/16 EISA Network Interface Card 5-38
ProNET-4/16 Unshielded Twisted-Pair (UTP) Media Filter 5-39
ProNET-4/16 Unshielded Twisted-Pair (UTP) Media Filter 5-40
4100+ Bridging Router Base Systems 5-41
CNX 500 Bridging Router Base Systems 5-48
Series 70 STP and UTP MAUs with Fiber Support 5-53
Series 70 Workgroup Wire Center (WWC) 5-55
Series 70 Unit Power Supplies 5-56
Series 70 Group Power Supply 5-57

Series 70 External Power Supplies 5-58
Configuration Guidelines 5-61

Digital to IBM Transport Products 5-62
Comparison of DEC SNA Domain Gateway and DECnet SNA Gateway Products 5-64
Comparison of VMS SNA and DECnet SNA Gateway Products 5-64
DEC ChannelServer II 5-66
DECnet SNA Gateway for Channel Transport 5-68
DEC SNA Domain Gateway for Channel Transport 5-70
DEC SNA VMS 3270 Application Services, V1.0 5-73
DECnet SNA Gateway for Synchronous Transport 5-74
VMS SNA 5-80
ULTRIX SNA 5-82
VAX Business-Integration Gateway (VBG) 5-84

DECnet SNA Access Routines and Programming Interfaces 5-88
Message Router/S Gateway (for IBM SNADS) 5-90
Message Router/P Gateway (for IBM PROFS) 5-90
DECnet SNA VMS 3270 Terminal Emulator (VMS 3270 TE) 5-90
DECnet SNA ULTRIX 3270 Terminal Emulator (ULTRIX 3270 TE) 5-92
DECnet SNA MS-DOS 3270 Terminal Emulator (MS-DOS 3270 TE) 5-93
DECwindows DECnet SNA 3270 Terminal Emulator for VMS (DW VMS 3270 TE) 5-95
DECwindows DECnet SNA 3270 Terminal Emulator for ULTRIX (DW ULTRIX 3270 TE) 5-97
DECnet SNA ULTRIX 3270 Terminal/Print Services 5-99
DECnet SNA VMS Remote Job Entry (RJE) 5-100
DECnet SNA ULTRIX Remote Job Entry (ULTRIX RJE) 5-101
DECnet SNA Data Transfer Facility (DTF) 5-101
DECnet SNA Integrated Information Access Packages 5-104
DECnet SNA VMS Distributed Host Command Facility (DHCF) ... 5-106
DECnet SNA VMS Printer Emulator (PrE) 5-106
DECnet SNA VMS Application Programming Interface (API) 5-107
DECnet SNA VMS Advanced Program-to-Program Communication/LU6.2 Programming Interface (VMS APPC) 5-108
DECnet SNA ULTRIX Advanced Program-to-Program Communication/LU6.2 Programming Interface (ULTRIX APPC) .. 5-108
DECnet SNA VMS 3270 Data Stream Programming Interface (VMS 3270 DSPI) 5-109
DECnet SNA ULTRIX 3270 Data Stream Programming Interface (ULTRIX 3270 DSPI) 5-110
DECnet SNA ULTRIX High Level Language Application Programming Interface (HLLAPI) 5-111
DECnet SNA FLASH/IMS Programming Interface (FPI) 5-112

VIDA for DB2 5-113
DEC RdbAccess for VAX RMS on VMS, Version 2.0 5-114
SQL Access Server for Rdb/VMS 5-115

IBM Interconnect Third-Party Solutions 5-116
Jnet 5-116
Jnet BSC/400 5-117
Jnet BSC/370 5-117
Jnet TCP NJE 5-118
Jnet SNA NJE 5-119

Binary Synchronous Communications Protocol Emulators 5-120
VAX 2780/3780 Protocol Emulator 5-120
VAX 3271 Protocol Emulator 5-121
RSX-11M/RSX-11M-PLUS RJE/HASP Emulator 5-122

Packetnet Communications Software 5-124
Overview 5-124
DEC X25router 2000, DEC X25gateway 100/500 5-131
VAX P.S.I. and VAX P.S.I. Access 5-131
X.25 Packet Switching Support for ULTRIX 5-135
DEC X.25 Access for ULTRIX 5-136

Open Systems Interconnection (OSI) Products 5-139
OSI and Government Open System Interconnection Profile (GOSIP) 5-139
OSI Application Developer's Toolkit 5-141
VAX DEC/MAP 5-142
DEComni/VMS V1.1, OSI Manufacturing Network Interconnect ... 5-143
DECosap/VMS V1.0 5-144

File Transfer and Terminal Emulation Products 5-146
VAX Public Access Communications (VAXPAC) 5-146
VTERM II, poly-COM 220, and poly-COM 240
for the IBM PC/XT/AT 5-147

Additional Software Products 5-149
WPS-PLUS/PC 5-149
Software Development Tools 5-150
HDLC Framing Software 5-151
X.25 Link Level Software 5-152
VAX ISDN Software V1.1 5-152
VAX ISDN Access Software V1.1 5-154

Section 6 Network Personal Computing

Overview **6-1**
Network Personal Computing 6-1

PATHWORKS Client Software **6-4**
PATHWORKS for DOS and Windows 6-5
PATHWORKS for DOS (TCP/IP) 6-8
PATHWORKS for DOS (NetWare Coexistence) 6-9
PATHWORKS Access Solution for TCP/IP 6-10
PATHWORKS for OS/2 6-12
PATHWORKS for OS/2 (TCP/IP) 6-14
PATHWORKS for Macintosh 6-15

PATHWORKS Server Software **6-17**
PATHWORKS for VMS 6-18
PATHWORKS for VMS (Macintosh) 6-19
PATHWORKS for ULTRIX 6-20
Pacer for ULTRIX 6-21
PATHWORKS for OS/2 6-22

PATHWORKS Packaged Servers **6-24**
PATHWORKS Server 333 6-26
PATHWORKS Server 433 6-27
PATHWORKS Server 3100 6-28

Personal Computer Mail Solutions **6-34**
DEC MAILworks for PCs 6-34

LAN-Based Applications **6-36**
TeamLinks for PATHWORKS 6-36
PATHWORKS Links for Windows 6-40
PATHWORKS Desktop Backup 6-41
PATHWORKS Browser for Windows 6-43
PATHWORKS Conferencing for Windows 6-44
eXcursion for Windows 6-46

PC Networking Hardware **6-48**
DEC EtherWORKS Network Interface Cards 6-48
EtherWORKS Router DECnet 6-51

Section 7 Distributed Applications

Distributed Applications Overview **7-1**

DECnet System Services **7-2**
VAX Distributed File Service (DFS) 7-3
VAX Distributed Queueing Services (DQS) 7-5
DECdns 7-7

DECmessageQ Message Bus 7-8
Remote System Manager (RSM) 7-11

Business Communications 7-14
Overview 7-14
VAX Notes 7-14
DEC VTX 7-16
TeamRoute V1.0 7-19
DEC Computer Integrated Telephony Server for VMS, V3.0 (CITSR) 7-22
DEC Computer Integrated Telephony Server 100/500 V1.0 (CITSR 100/500) 7-23
DEC Computer Integrated Telephony Applications Interface for VMS, ULTRIX V3.0 7-24
VOICEmail for VAX VMS Systems 7-26

Electronic Data Interchange 7-28
DEC/EDI 7-28
FileBridge for DEC/EDI 7-30

Electronic Messaging 7-31
Overview 7-31

Electronic Messaging — MAILbus 7-34
MAILbus 7-34
VAX Message Router 7-35
VAX Message Router X.400 Gateway (MRX) 7-37
VAX Message Router, VMSmail Gateway (MRGATE) 7-39
ULTRIX Mail Connection 7-40
VAX Message Router/S Gateway (MR/S) for IBM SNADS 7-41
VAX Message Router/P Gateway (MR/P) for IBM PROFS 7-42
VAX Message Router Programmer's Kit (MRIF) 7-44
Retix OpenServer 400 7-45

Electronic Messaging — Services 7-48
MAILbus Integration Services 7-48
DEC MAILworks PostMaster for LANs and WANs 7-49
MAILbus Planning and Design 7-52
MAILbus Installation and Configuration 7-53
MAILbus Data Collector 7-53
MAILbus Directory Registrar 7-54
MAILbus DDS Rapid Replicator 7-55
MAILbus Monitor 7-55
MAILbus Directory Synchronizer 7-57
MAILbus Directory Query 7-59

Electronic Messaging — Enterprise Messaging Server 7-60
Enterprise Messaging Server 7-60

Electronic Messaging — User Agents **7-62**
Overview 7-62
Simple Mail 7-63
DEC MAILworks 7-64
DEC MAILworks Server 7-68
DEC MAILworks for Windows 7-72
DEC MAILworks for DOS 7-73
DEC MAILworks for Macintosh 7-75
DEC MAILworks for Video Terminals 7-77
DEC MAILworks for VMS DECwindows 7-77
ALL–IN–1 Integrated Office System (IOS) Server for VMS 7-78
ALL–IN–1 Personal Assistant 7-80
ALL–IN–1 Desktop Integration 7-81
ALL–IN–1 DESKtop Server for VMS 7-82
ALL–IN–1 STARTER 7-85
MOBILIZER for ALL–IN–1 7-85

Electronic Messaging — ULTRIX **7-87**
MAILbus 400 for ULTRIX 7-87
MAILbus 400 Message Transfer Agent (MTA) 7-89
X.400 MAIL User Agent on UNIX Operating System: Alfalfa POSTE 7-91

Section 8 Network Management Solutions

Manageability: Management Products **8-1**

DECmcc Family of Management Products **8-5**
EMA — the Framework 8-5
DECmcc Packages 8-6
Management Modules 8-9
DECmcc Developer's Toolkit 8-13

Additional Network Management Products **8-15**
Overview 8-15
DECmcc Management Station for ULTRIX (MSU) V1.1 8-15
Terminal Server Manager V1.4 8-17
DECelms V1.1 8-17
DECmcc Extended LAN Manager V1.2 8-20
LAN Traffic Monitor V1.2 8-26
LAN Traffic Monitor-Reports (LTM-Reports) V2.0 8-27
NMCC VAX ETHERnim (Ethernet Network Integrity Monitor) V2.3 8-29
NMCC DECnet Monitor V2.3 8-30
DECmcc WANdesigner 8-31
NET/MASTER 8-33
TokenVIEW Plus 8-34

SNMP/Token Ring Proxy Agent 8-35
Remote System Manager 8-36

Network Security 8-37
Ethernet Enhanced Security System (DESNC) 8-37
DECinspect Family of Security Management Tools 8-41
DECinspect Compliance Manager for VMS V2.2 8-41
DECinspect Compliance Manager for ULTRIX V2.2 and for SunOS V2.2 8-42
DECinspect Intrusion Detector for VMS V1.0 8-44
DECinspect Security Reporting Facility for VMS V2.0 8-45

Section 9 Network Services

Network Integration Services 9-1
Overview 9-1
Network Integration Services 9-1
Open Network Customer Training 9-4
Sales Case Study: Multivendor Network Integration 9-7
Software Installation Services 9-8

Appendix A Network Configuration Guidelines

802.3/Ethernet Configuration Guidelines A-1
Phase IV Network Terms A-1
DNA Phase IV Network Configuration Guidelines A-1
Converting Networks from Phase III to Phase IV A-4
802.3/Ethernet-Based Products A-6
Planning a Baseband 802.3/Ethernet LAN A-9
Planning an Unshielded Twisted-Pair 802.3 LAN A-18
Planning a ThinWire 802.3/Ethernet LAN A-21
Planning an Extended Baseband 802.3/Ethernet LAN A-26
Mixed Spanning Tree Networks A-26
Planning a Broadband 802.3/Ethernet LAN A-33
Planning an Extended Broadband 802.3/Ethernet LAN A-35
Connecting Baseband to Broadband LANs A-36
Connecting Shared Resources to an 802.3/Ethernet LAN A-38
Connecting an 802.3/Ethernet LAN to Remote Networks A-40
DECnet-to-IBM/SNA Communications A-47

FDDI Configuration Guidelines A-48
DECconcentrator 500 ..... A-51
DECbridge Family A-55
FDDI Cabling Requirements A-59

Configuring the Messaging Network A-63
Enterprise Messaging Server A-63
QUICKSTEP A-65

Appendix B Product Performance Guidelines

Performance Guidelines Overview **B-1**

DECnet Communications Software Performance Guidelines **B-2**
DECnet-RSX B-2
PATHWORKS for DOS B-5
PATHWORKS for OS/2 ..... B-8

Router Performance Guidelines **B-11**
DECrouter 250 ..... B-11
DEC X25router 2000 ..... B-14

OSI Applications Performance Guidelines **B-15**
FTAM B-15

DECnet System Services Performance Guidelines **B-18**
Distributed File Service V1.1 ..... B-18
DECdns B-24

Special Server Performance Guidelines **B-32**
DEC ACCESSWORKS B-32

Digital to IBM Interconnect Product Performance Guidelines **B-33**
Bisync Emulators B-33
Data Transfer Facility (DTF) V3.0 ..... B-34

Digital Internet Interconnect Product Performance Guidelines **B-39**
DECnet Internet Gateway B-39
Internet Portal V1.0 ..... B-41

Appendix C Environmental Specifications

Environmental Specifications **C-1**

Appendix D Related Documentation

Related Documentation **D–1**
The Cost of Network Ownership D–4
Network Troubleshooting Guide D–5

Glossary

Index

Figures

Open Systems Interconnection Model 1-4
DNA, FDDI, and 802.3/Ethernet Digital Relationships 1-5
Business Architecture 1-10
New York-to-London Connection 1-13
New York Local Area Networks 1-15
New York – Washington – Philadelphia Connection 1-16
New York Departmental Networks 1-17
New Jersey Buildings Connected via Fiber Optic LAN Bridges 1-18
New York-to-New Jersey Connection 1-19
Sydney Building and Remote Office Connected to New York via X.25 Link 1-20

Baseband Ethernet Cabling Layout 2-3
ThinWire Cabling Layout 2-4
Generic LAN Servers 2-5
Fiber Optic Ethernet LAN 2-7
Baseband/Broadband 802.3/Ethernet LAN Configuration with LAN Bridge 2-8
Baseband 802.3/Ethernet Office Application 2-10
Baseband 802.3/Ethernet Factory Application 2-11
Baseband 802.3/Ethernet CAD/CAM Application 2-12
Baseband 802.3/Ethernet Hospital Application 2-14
Baseband 802.3/Ethernet Laboratory Application 2-15
Baseband 802.3/Ethernet University Application 2-16
802.3/Ethernet Products 2-18
DELNI Standalone Configuration 2-21
DELNI Hierarchical Standalone Configuration 2-22
DELNI Connected Configuration 2-22
DETPR 10BaseT Workgroup Hub 2-30
Workgroup LAN Hub 2-38
Fiber Optic DECrepeater 200-to-LAN Bridge Configuration 2-44
EIA/TIA 568 Commercial Building Wiring Standards 2-49
OPEN DECconnect System Network 2-51
OPEN DECconnect Radial (Star) Topology Work Area 2-55
Office Faceplate Configuration 2-60
H3111-C Modular Faceplate 2-60
Office Configuration with Passive Adapters 2-69
Office Configuration with Active Converter 2-69
Fiber Optic Ethernet System 2-78
802.3/Ethernet Communications Controllers 2-80
Local LAN Bridge 150 Configuration 2-95
Remote Fiber Optic LAN Bridge 150 Configuration 2-95
METROWAVE Bridge Configuration 2-101
LAN Configuration Using Terminal Servers 2-112

Figures, Continued

MUXserver 380 and DECmux 300 Configuration 2-125
Terminal Server Manager Configuration 2-129
Digital's Routing Portfolio – Digital's Multiprotocol Routing Family 2-151
DEC WANrouter 250 Sample Topology 2-160
DEC WANrouter 500 Sample Topology 2-164
DEC X25gateway 500 Configuration (Digital-to-Multivendor Host) 2-167
X.25/X.29 Terminal Access Configuration 2-168
FDDI Network Overview 3-1
FDDI Backbone 3-9
Cable Assembly, Fiber Optics, FDDI-to-FDDI (BN24B-xx) 3-25
Cable Assembly, Fiber Optics, FDDI-to-2.5 mm Bayonet ST-Connector (BN24D-xx) 3-25
Cable Assembly, Fiber Optics, 2.5 mm Bayonet-ST-to-2.5 mm Bayonet ST-Connector (BN24E-xx) 3-25
DECbridge Family Upgrade Alternatives 3-38

DMB32 Typical Configuration 4-8
DEC WANcontroller 220 Typical Configuration 4-10
DEC WANcontroller 720 Connectivity Options 4-14
DHQ11 Configuration with EIA-423-A Cabinet Kit 4-23
DIV32 Typical Configuration 4-32

ADVANTAGE-NETWORKS Architecture 5-5
ADVANTAGE-NETWORK Configuration 5-6
Typical 802.5/Token Ring Network Configuration 5-33
Typical Multi-LAN Enterprise Network Configuration 5-34
MAU Connectivity 5-59
MAU and WWC Connectivity 5-60
WWC Connectivity 5-60
DECnet SNA Environment 5-63
DECnet SNA Gateway-CT Configuration 5-69
DECnet SNA Domain Gateway Configuration 5-71
DECnet SNA Gateway-ST Configuration 5-75
DECnet SNA VMS Gateway Management Configuration 5-79
VMS SNA Configuration 5-81
VAX Business-Integration Gateway and DECnet 5-85
VMS 3270 Terminal Emulator Configuration 5-91
ULTRIX 3270 Terminal Emulator Configuration 5-93
MS-DOS 3270 Terminal Emulator Configuration 5-94
DECwindows 3270 Terminal Emulator for VMS Configuration 5-97
DECwindows 3270 Terminal Emulator for ULTRIX Configuration . 5-99
DTF Configuration 5-103
Native-Mode Operation 5-125
Access Mode Operation 5-126

Figures, Continued

Packetnet Communications Including Multivendor Computers 5-130
VAX P.S.I. Native Mode of Operation 5-132
VAX P.S.I. Multihost Mode of Operation 5-133
DEC X.25 Access for ULTRIX 5-137
OSI-to-GOSIP Standards Process 5-140
Integrated Personal Computing Network 6-2
TeamLinks for PATHWORKS Application Integration HUB for Networked Solutions 6-36

DECnet System Services Configuration 7-3
VAX Distributed File Service 7-4
VAX Distributed Queueing Service 7-6
DECdns Configuration 7-7
DECmessageQ Architecture 7-9
Remote System Manager Configuration 7-11
TeamRoute Workflow Management 7-19
Computer Integrated Telephony (CIT) Configuration 7-26
DEC/EDI Sample Solution 7-29
X.400 Model 7-32
Digital's Implementation of X.400 Model 7-33
Digital's Electronic Messaging Components 7-34
Retix OpenServer 400 DOS 7-45
DEC MAILworks PostMaster for LANs/WANs Sample Solution ... 7-50
Electronic Messaging Topology 7-63
ALL–IN–1 Desktop Integration 7-81
Multiplatform Mail Configuration 7-88
Typical Configuration 7-90

DECmcc Configuration 8-4
DECmcc Package Matrix 8-8

Conventional Point-to-Point Remote Configuration A-2
Remote Multipoint Nonnested Configurations A-3
Typical Phase III Network A-4
802.3/Ethernet-Based Phase IV Network A-5
DECnet Network with Many Segments A-7
DECstart Network with Many Segments (Continued) A-8
Standard 802.3/Ethernet Cable Segment Using Barrel Connectors .. A-9
802.3/Ethernet LAN with Connected Processors A-12
IEEE 802.3/Ethernet LAN Expansion Using a Local Repeater (100 m [328 feet] maximum separation between Ethernet cables) .. A-13
IEEE 802.3/Ethernet LAN Expansion Using a Fiber Optic Repeater (1.0 km maximum separation between repeaters) A-14
DELNI Standalone Configuration A-14

Figures, Continued

DELNI Hierarchical Standalone Configuration A-15
DELNI Connected Configuration A-16
Baseband 802.3/Ethernet Distance Guidelines A-18
Unshielded Twisted-Pair Workgroup/Departmental Configurations .. A-19
Unshielded Twisted-Pair/10BaseT Connected Departmental Configuration A-20
ThinWire Small Workgroup Configuration A-22
ThinWire Standalone Departmental Configuration A-22
ThinWire Connected Departmental Configuration A-23
Extended Baseband LAN Configuration and Distance Guidelines (Standard, Fiber Optic, and METROWAVE Bridges) A-32
Broadband 802.3/Ethernet Distance Guidelines: Single-Cable Networks A-34
Broadband 802.3/Ethernet Distance Guidelines: Dual-Cable Networks A-34
Extended Broadband LAN Configuration and Distance Guidelines (Single Cable) A-36
Baseband-to-Broadband LAN Configuration Guidelines (Standard Bridge) A-37
Baseband-to-Broadband LAN Configuration Guidelines (Fiber Optic Bridge) A-37
802.3/Ethernet LAN with Many Terminals Per Host A-38
802.3/Ethernet LAN Configuration Using Terminal Servers A-39
Connecting Host Systems to an 802.3/Ethernet LAN A-40
802.3/Ethernet LAN Configuration Using a DECrouter 2000 ..... A-43
DEC X25router 2000 Configuration (DECnet-to-DECnet) A-46
DECnet/SNA Gateway Configuration A-47
Dual Homing Topology Using Concentrators and a DAS Bridge A-49
DECconcentrator 500 and Station Port Connections A-52
Dual Homing for Two Concentrators A-53
DECconcentrator 500 in a Standalone Workgroup Topology A-53
DECconcentrators in a Dual Ring of Trees A-54
DECbridges in an FDDI-to-802.3/Ethernet Thick Wire Topology ... A-56
DECbridge Devices in an FDDI-to-802.3/Ethernet ThinWire Topology A-58
Shielded Twisted-Pair Cables A-60
ThinWire Cables A-61
Enterprise Message Server Configuration A-63

Effects of Multibuffering on Bit Rate B-2
Throughput with Equal-Cost Load Splitting B-5
Test Configurations for the PATHWORKS for DOS Software B-6
Test Configurations for PATHWORKS for OS/2 ..... B-8
DECnet/DAP, DFS and Local File Access Performance Comparison B-21
Effects of Multibuffering on Bit Rate B-22

Figures, Continued

DECdns Test Configuration B-25
Response Time of READ and ADD Operations B-26
Server CPU Time of READ and ADD Operations B-27
Response Time vs RMS Buffer Count B-28
Test Configuration B-38
Single/Multiple DECnet or Internet Configuration B-39

Tables

802.3/Ethernet Communications Controllers 2-80
802.3/Token Ring Controller 2-81
Comparison of Extended LAN Devices 2-92
Primary Buying Reasons for 802.3/Ethernet Terminal Servers 2-108
Summary of 802.3/Ethernet Terminal Servers 2-109
Summary of Multiprotocol Router, Bridges, and Gateways 2-150
Summary of DECnet Phase IV Routers 2-154
Summary of 802.3/Ethernet Routers 2-179

Modem Selections 4-56

DECnet Packaging Support 5-7
DECnet Product Capabilities 5-9
4100+ Bridging Router Base Systems Supported Protocols 5-41
CNX 500 Bridging Router Base Systems Supported Protocols 5-48
Summary of 802.3/Ethernet Gateways 5-65
Comparison of VMS SNA and DECnet SNA Gateway Capabilities . 5-66

Comparison of DEC EtherWORKS Product Family 6-49

Typical DESNC Configuration 8-39

Connectivity Reference Table A-25
FDDI Multimode Fiber Cable Matrix A-59

Comparative FTAM Test Results, Throughput, Kb/s, on DECstation 3100s B-16
FTAM–1 Comparative File Copy CPU Usage, on DECstation 3100s B-16
FTAM–3 Comparative File Copy CPU Usage, on DECstation 3100s B-16
Comparative FTAM Test Results, Throughput, Kb/s B-17
FTAM–1 Comparative File Copy CPU Usage on VAXserver 3600s . B-17
FTAM–3 Comparative File Copy CPU Usage on VAXserver 3600s . B-17

In the U.S., one call (between 8:30 a.m. to 6 p.m. Eastern Standard Time) to 800 DIGITAL (800 344–4825) gives you

- Product information and availability
- Pre-purchase technical information
- Order placement
- Order status
- Price quotes and confirmation

Order by Computer (800 234–1998)

Dial into the Electronic Connection information and ordering number with any Digital compatible terminal or PC at 1200, 2400, or 9600 baud. For access information, contact your Digital sales representative.

Browse and buy seven days a week, 7 a.m. to midnight Eastern Standard Time.

Call Your Sales Representative

Your local Digital Sales Representative will be glad to help you place an order or give you further information on the products offered in this catalog.

The corporate Customer Relations number for other questions not related to orders and products listed in the catalog is 800 DEC–INFO (800 332–4636) 8:15 a.m. to 5:00 p.m. Easter Standard Time.

Europe and GIA

European customers should contact their local sales office or DECdirect office (refer to the following listing).

GIA customers should contact their local sales office.

DECdirect Europe

To provide customers with prompt technical and service support, Digital Equipment Corporation has DECdirect offices in the following European countries.

Contact your local DECdirect office for information on networks products, answers to questions relating to Digital products, and many other special services.

Austria	Digital Equipment Corporation GmbH, DECdirect, Ziedlerstrasse 21, 1230, Wien.	TEL: 0222 869640
Belgium	Digital Equipment Corporation NV/SA, DECdirect, 1 rue de l'Aeronef, 1140 Brussels.	TEL: 02 729 8888
Denmark	Digital Equipment Corporation A/S, DECdirect, Aadalsvej 99, 2970 Horsholm.	TEL: 45 172003 *or* DECsite TEL: 45 172241
Finland	Digital Equipment Corporation Oy, DECdirect, PL16, 02201 Espoo.	TEL: 90 452 2455
France	Digital Equipment France, 11 avenue Joliot Curie, ZI bois de l'Epine, BP 202, 91007 Evry Cedex.	TEL: 1 6987 6987
Germany	Digital Equipment GmbH, DECdirect, Bahnhofstrasse 27, 8043 Unterfoehring.	TEL: 0130 7778 (Toll-free call)
Ireland	Digital Equipment Ireland Ltd., DECdirect, Park House, North Circular Road, Dublin 7.	TEL: 01 384231
Israel	Digital Equipment (DEC) Ltd., DECdirect, PO Box 2033, Herzelia 46120.	TEL: 052 593260 TEL: 052 593407
Italy	Digital Equipment S.p.A., Via A. Pacinotti 22, 16151 Genova.	TEL: 1 678 02075

DECdirect Europe (cont.)

Luxemburg	Digital Equipment Corporation SA, DECdirect, 23 rue des Bruyères, 1274 Howald.	TEL: (352) 496421
Netherlands	Digital Equipment BV, DECdirect, Antwoord Nummer 1736, 3500 VC, Utrecht.	TEL: 030 832 883
Norway	Digital Equipment Corporation A/S, DECdirect, Ammerudveien 22, 0958 Oslo 9.	TEL: 02 160550
Portugal	Digital Equipment Portugal Ltd., Empreendimento Torres/Amoreiras, Av. Eng. Duarte Pacheco, Torre 1–9 Andar, 1000 Lisbon.	TEL: 0500 1500 (Toll-free call)
Spain	Digital Equipment Corporation S.A. DECdirect, Cerro del Castanar 72, Mirasierra, 28034 Madrid.	TEL: 900 100685 (Toll-free call)
Sweden	Digital Equipment AB, DECdirect, 17289 Sundyberg.	TEL: 629 8180 from Stockholm, *or* TEL: 020 78 8280 from outside Stockholm
Switzerland	Digital Equipment Corporation AG, DECdirect, Ueberlandstrasse 1, 8600 Duebendorf 1.	TEL: 155 3388 (Toll-free call)
UK	Digital Equipment Co. Ltd., DECdirect, PO Box 85, Reading RG2 0TU.	TEL: 0734 393200

Customers can use this guide to find the following kinds of information about Digital's networking and communications products:

- *Background Information* presents a general overview of networking and communications concepts and architecture.
- *Product Information* describes product features and capabilities.
- *Configuration Information* describes how products can be linked into networks.
- *Ordering Information* lists the Software Product Description and Unique Product Identifiers required to purchase specific variations of a product.

To locate information in this guide, find specific topics listed below and refer to the Contents for page numbers.

Background Information

General background information about Digital networking and communications is presented in Section 1.

Product Information

Locating Products

Products are listed in the Contents and alphabetically in the Index.

New Products

New products and new information for specific products are highlighted under "What's New to the Networks Buyer's Guide."

Hardware Product Descriptions

Hardware product descriptions are in Section 2, "Connectivity: 802.3/Ethernet Local Area Networks," Section 3, "Connectivity: FDDI," and Section 4, "Connectivity: Hardware Communications Controllers." Each description is followed by specifications and order codes as well as any prerequisite hardware and software.

Software Product Descriptions

Descriptions of software products are located in Section 5, "Interoperability: Communications Software," Section 6, "Network Personal Computing," Section 7, "Distributed Applications," and Section 8, "Manageability: Management Products." Each description is followed by the specific Software Product Description, Unique Product Identifier, and any prerequisite hardware and software.

Network Services Products

Network Services Products are listed in Section 8, "Enterprise Management Solutions," and Section 9, "Network Services."

Product Comparisons

Tables comparing the features and capabilities of products are located throughout this guide. To locate comparisons for specific products, refer to the "Tables" section of the Contents.

Specifications

Specifications for hardware products are listed in individual product descriptions and in summary tables.

Prerequisite Products

Any prerequisite hardware or software necessary to use a product is listed in the individual product description.

Configuration Information

Overview configurations are described in Section 2, "Connectivity: 802.3/Ethernet Local Area Networks."

Detailed configuration and performance information are located in Appendices A and B.

Ordering Information

Order codes are listed in tables after each description of a hardware product. Software Product Description numbers and Unique Product Identifiers follow each description of a software product.

Order code formats are explained at the beginning of Section 5. To order network products in prepackaged configurations, contact the appropriate product marketing manager.

Comments and Suggestions

Use the reply card at the end of this guide to make comments and suggestions.

Open Advantage: A New Era in Digital History

Digital is entering a new era in which its customers will be able to choose the best solutions available while protecting existing investments.

The company's open business practices are leading the way. Digital has symbiotic relationships with a number of other vendors in areas such as engineering, marketing, and distribution.

An active member and founder of many standards organizations, Digital's open services help integrate and support multivendor environments.

Digital is moving ahead with open technology by announcing that it plans to open the VMS operating system. This new Open VMS replaces Digital's last proprietary network architecture.

Innovations to Buyer's Guide

We provide a six-fold choice of media, meeting the many and different individual needs and requirements of our audience. Today, the information from the *Networks Buyer's Guide* is available in the following formats and media:

- the traditional **hardcopy** catalog format, distributed to a worldwide audience.
- **online** for Digital customers through DECdirect's "Electronic Connection," allowing customers to order directly or merely "windowshop" for the products.
- **demand print** capabilities, either in (editable) ASCII format (for proposals, etc.), or alternatively, in PostScript format with integrated text and graphics. This latter capability allows the user to extract the information in customer-quality form and reprint the material either as standalone single- or multiple-topic documentation for a wide range of purposes.
- on **VTX** through US Access to Selling Information. The Buyer's Guide information is presented in both Competitive Information and in Digital's Proposal Development System. This VTX-based application allows the sales force to access the Networks Buyer's Guide information through easy-to-use menus or through keyword searches.
- on **CD-ROM** or in **Bookreader** format, providing high-speed correlated data and information access in a powerful and compact format.
- **in Europe** through an On-Line Information System (OLIS), for content-based information retrieval and automated multiformat printed output. This videotex-like database front-end allows users to pinpoint specific data via English-like queries, Boolean Logic, or SQL-type textbase searches across all major Digital catalogs: "Anytime and Anywhere" in the world.

Electronic Edition

The complete *Networks Buyer's Guide* is available on line either as a PostScript file (text with integrated graphics in read- and print-only format), or as a text-only ASCII file.

To access the instructions for copying the files, enter the following:

```
$COPY TNPUBS::PUBLIC$DISK:[PUBLIC.BG]BG_README.FIRST *
```

For external access via modem connection, the networks product information is available through the **Electronic Connection**. For access information, contact your Digital sales representative.

New Products

DECagent 90
HUBwatch for Windows
HUBwatch for DECmcc MSU

With the DECagent 90 and HUBwatch software, the WorkGroup Family of Networking Products will be manageable through an easy-to-use, graphical SNMP-based interface on a choice of management platforms.

Only Digital's hub management solution has the flexibility to manage multiple hubs with a single module that works both inside and outside of the hub. One DECagent 90 can manage up to four daisy-chained hubs (two daisy-chained hubs count as one hub). Up to 480 10BaseT repeater ports can be managed by a single DECagent 90. The ability to use the DECagent 90 as a standalone unit frees up a slot in the hub. ▲ Refer to Section 2, "Wiring Hubs," for more information.

DECserver 90TL Telnet/LAT Terminal Server

Designed for high-speed asynchronous connections to UNIX, ULTRIX, VMS, DOS, and multivendor network services, the DECserver 90TL delivers the performance of a midrange terminal server in a compact, low-cost module. This 8-port multi-session Telnet/LAT terminal server offers industry-standard connections at speeds up to 57.6 Kb/s. It supports TCP/IP, Telnet, LAT, and SLIP protocols and several remote management systems.

As part of the award-winning WorkGroup Family of Networking Products, the DECserver 90TL brings a unique flexibility to networking. Designed for office environments, it can be used standalone for small workgroups, or combined with other modules in the DEChub 90 to connect dozens of terminals, printers, and PCs to large enterprise networks. ▲ Refer to Section 2, "802.3/Ethernet Communications Servers," for more information.

DEC ACCESSWORKS

DEC ACCESSWORKS is Digital's family of server products that provide multivendor client platforms with manageable access to multivendor information. DEC ACCESSWORKS provides a client/server integrated solution to a major problem that faces the industry today — the ability to access information across an enterprise, particularly from disparate desktops. Many organizations are attempting to solve this problem today by creating direct desktop-to-database connectivity, which is creating a massive management problem. Now you can provide a robust, manageable, cost-effective solution. ▲ Refer to Section 2, "802.3/Ethernet Special Purpose Servers," for more information.

Software Upgrade Packages for Installed FDDI Products

For those customers who currently have DECconcentrator 500s, DECbridge 500/600 series, DEC FDDIcontroller 700s, and/or DEC FDDIcontroller 400s installed, software upgrade packages are available that provide the latest in FDDI features and functionality. The new features are added using a downline-load utility to upgrade the device's permanently resident firmware over the network. This utility is used to load new versions of FDDI-specific software into the FDDI device. It is included as part of each software enhancement package and does not need to be ordered separately.

Each Software Upgrade Package contains the FDDI device-specific software and documentation along with the downline-load utility license, media, and documentation. ▲ For more information, refer to Section 3, "FDDI Overview," and to the following publications: *FDDI Networking, Digital's Next Generation of High-Speed LAN Solutions* (EC-F0542-42); and *A Primer to FDDI: Fiber Distributed Data Interface* (EC-H0750-42).

Automatic Subscription Software Update Service for Digital's FDDI Products

Digital offers a wide variety of FDDI products based on the ANSI FDDI standard. As this standard evolves, Digital is committed to stay compliant with the standard. Often this means enhancements and software fixes to our existing FDDI software microcode.

As these new versions of FDDI software become available, customers are required to learn that a new version of software is available, and then place an order for this new version of FDDI software. With the availability of the FDDI Software Update Subscription Service, customers will now have two options. They can choose to continue tracking and ordering new versions of FDDI software as they become available, or they can now purchase the FDDI Software Update Subscription Service.

This subscription service sends new versions of customer-installable software directly to the customer. Customers then update their FDDI devices at their convenience. This service will be offered for each FDDI device. ▲ Refer to Section 3, "FDDI Overview," for more information.

DEC FDDIcontroller/EISA (DEFEA)

Digital is announcing the newest member of its FDDI-based controller family, the DEC FDDIcontroller/EISA (DEFEA-AA). This option is a low cost, single attachment station (SAS). It includes an ANSI-standard Media Interface Connector (MIC) that supports multimode fiber connection to an ANSI-compliant FDDI concentrator, such as the DECconcentrator 500.

The DEC FDDIcontroller/EISA supports Digital's EISA-based PCs including applicationDEC433T, DECpc433T and open, industry standard EISA-based systems. SCO UNIX and Novell NetWare software drivers are available for flexible configurations of networks. ▲ Refer to Section 3, "FDDIcontroller Family," for more information.

DEC WANcontroller 720 (DSYT1)

The DEC Wide Area Network Controller 720 (DEC WANcontroller 720) is a high-speed synchronous communication processor for Digital's TURBOchannel RISC-based DECstation and DECsystem product set. The DSYT1 enables standalone RISC workstation users to conveniently and economically establish peer-to-peer communications with DECnet OSI, SNA, TCP/IP, and X.25 processing environments, either locally or over telephone lines.

The DSYT1 contains two synchronous ports which can operate at speeds up to 64 Kb/s simultaneously (with like or unlike protocols), or one of the ports can operate at up to 1.544 Mb/s for T1 clear-channel communications over leased telephone lines (external DSU/CSU required). Both HDLC/LAPB and SDLC protocols are supported at these speeds. Clocking may be either internally or externally supplied. ▲ Refer to Section 4, "TURBOchannel Communications Controllers," for more information.

DSW41-AA, DSW42-AA Synchronous Controllers

The DSW41-AA and DSW42-AA are high-performance synchronous communication controllers for the new MicroVAX 3100 models 30, 40, and 80. These options provide higher performance than currently available with the DSH32 on the MicroVAX 3100 models 10e and 20e. In addition, the synchronous options are no longer bundled with the asynchronous options, but can be used in conjunction with the DHW4x-xx asynchronous options. The benefit is greater choice and configuration flexibility. ▲ Refer to Section 4, "MicroVAX 2000 Communications Controllers," for more information.

DHW41-xx, DHW42-xx Asynchronous Multiplexers

The DHW41/DHW42 are high-performance asynchronous multiplexers which provide full-duplex, serial data lines for terminal connections or full modem control. These options are mounted directly inside the MicroVAX 3100 models 30, 40, or 80 systems. They are an excellent alternative to terminal servers. ▲ Refer to Section 4, "MicroVAX 2000 Communications Controllers," for more information.

DECnet/OSI for VMS V5.5

DECnet/OSI for VMS implements both OSI and DECnet protocols for VMS systems and supersedes DECnet-VAX. It provides support for multivendor connectivity, larger networks, and EMA-based network management products. DECnet/OSI for VMS also supports backward compatibility with DECnet Phase IV implementations, transition tools (for Phase IV to DECnet/OSI), and an integrated naming service for object names and address resolution.

This release features GOSIP compliant OSI components, FDDI support, DECdns (including support for the local naming option) and DECdts. For small networks (less than 100 nodes), a local naming option is provided as an alternative to the DECdns server.

The OSI components provided in DECnet/OSI for VMS include: FTAM, VT, the Upper Layers (OSI Applications Kernel — OSAK), Transport (VAX OSI Transport Service — VOTS), X.25 (VAX Packetnet System Interface [P.S.I.] Access), and the Wide Area Network Device Drivers (WANDD). ▲ Refer to Section 5, "DECnet/OSI Communications Software," for more information.

DEC SNA Domain Gateway for Channel Transport

The DEC SNA Domain Gateway for Channel Transport is a functional enhancement to the DECnet SNA Gateway for Channel Transport (DECnet SNA Gateway-CT), the high-end members of the DEC SNA Transport family. The Domain Gateway is software that runs on the DEC ChannelServer II dedicated server hardware. The DEC SNA Domain Gateway CT operates as part of both the DECnet and SNA networks, allowing users to exchange information and share resources between suitably configured Digital systems in a DECnet environment and suitably configured IBM systems in a Systems Network Architecture (SNA) environment. The Domain Gateway fully supports existing access routines with the exception of the Distributed Host Command Facility (DHCF). ▲ Refer to Section 5, "Digital to IBM Transport Products," for more information.

DEC SNA VMS 3270 Application Services, V1.0

The DEC SNA VMS 3270 Application Services is a layered software product that enables IBM 3270 terminal and PC users in an SNA network to access transaction processing applications on Digital systems as block mode terminals.

The DEC SNA VMS 3270 Application Services provides a library of routines to call from a VMS application. The VMS application, which serves as a primary logical unit, can activate and accept sessions with remote 3270 devices. VMS applications can be developed using the 3270 Application Services API.

The VMS 3270 Application Services integrates with DECforms for 3270 terminal support. DECforms for 3270 terminals allows application developers to design forms and build applications without knowledge of the 3270 data stream, SNA, or the DEC SNA 3270 Application Services API. (DECforms is Digital's implementation of the proposed ANSI/ISO standard for a Form Interface Management System (FIMS).) ▲ Refer to Section 5, "Digital to IBM Transport Products," for more information.

DEC RdbAccess for VAX RMS on VMS, Version 2.0

Version 2.0 of DEC RdbAccess for VAX RMS on VMS now provides direct read-write SQL access to RMS files. Known as RdbAccess for VAX RMS, this product also provides a read-only VAX SQL access gateway to IBM VSAM (and some non-VSAM) data sets. Applications using this product can perform relational operations such as selects, sorts, joins, and projects on a single RMS or VSAM file, or on multiple files.

With Version 2.0, transaction semantics were added to RdbAccess for VAX RMS, including 2-phase commit support for accessing multiple resource managers. The rollback operation is supported for files for which RMS journaling is enabled. ▲ Refer to Section 5, "DECnet SNA Access Routines and Programming Interfaces," for more information.

SQL Access Server for Rdb/VMS

SQL Access Server for Rdb/VMS is Digital's first product offering based on specifications for remote database access that have been developed by The SQL Access Group, a consortium of more than 40 software development companies.

The SQL Access model is based on client/server architecture. The SQL Access Server for Rdb/VMS enables SQL Access client applications on any platform to perform read- and write-access to data in any Rdb/VMS database on the network. Information that is passed between the client and the server implements the Remote Database Access (RDA) protocol published by ISO (ISO DIS 9579-1 and ISO DIS 9579-2). ▲ Refer to Section 5, "DECnet SNA Access Routines and Programming Interfaces," for more information.

PATHWORKS Desktop Backup

Digital's PATHWORKS Desktop Backup product is a high-performance, low-cost, easy-to-use network backup solution providing backup-and-restore services to network-attached personal computers. PATHWORKS Desktop Backup uses a client/server layered software approach to provide unattended backup of multiple PCs to one or more servers. For V1.0, clients must use MS–DOS as an operating system and can optionally use Windows 3.0 as a shell. ▲ Refer to Section 6, "LAN PC Applications," for more information.

EtherWORKS Router DECnet

The EtherWORKS Router DECnet V1.0 connects PC LANs to your DECnet wide area network. By adding a DECnet router on an Ethernet/802.3 LAN, your PC (and other PCs on the LAN) can communicate with other DECnet nodes over asynchronous or synchronous connections that support the Digital Data Communications Message Protocol (DDCMP). The DDCMP ensures integrity and correct sequencing of messages between adjacent nodes.

The result is full access to a robust, wide area network for file and print services and for client-server applications such as mail, conferencing, and browsing. In addition, your file and print services will work transparently over the WAN on other servers, helping you to get optimal use from your key resources.

The EtherWORKS Router DECnet addresses the DECnet connectivity needs of small PC local area networks (LANs) in remote branch office locations usually found in retail, banking, service, and insurance businesses. ▲ Refer to Section 6, "PC Networking Hardware," for more information.

DECmessageQ Message Bus

DECmessageQ provides a powerful, yet easy to use, set of tools for building distributed software solutions for heterogeneous, multivendor distributed computing environments. DECmessageQ features message recovery services, selective broadcast services, productivity tools and integration features that allow for efficient and effective development of distributed applications. DECmessageQ supports both asynchronous and synchronous client/server interprocess application models, and is currently used in mission-critical applications in the manufacturing, process control, financial, and defense industries. ▲ Refer to Section 7, "DECnet System Services," for more information.

DEC/EDI

Digital's Electronic Data Interchange is the electronic exchange of structured business data — such as purchase orders, invoices, and shipping notices — between an enterprise and its trading partners: customers, suppliers, and subsidiaries.

Digital's EDI solution includes: EDI software (DEC/EDI), system integration tools, EDI-ready business applications, and a broad range of services to assist customers in implementing and maintaining an EDI system. ▲ Refer to Section 7, "Electronic Data Interchange," for more information.

FileBridge for DEC/EDI

FileBridge for DEC/EDI allows you to substantially reduce the effort required to integrate EDI solutions into your business environment. FileBridge provides a table-driven "mapper" that maps data from your business applications to the appropriate EDI standard format. The software handles variations required by differences in standards, version levels, and unique trading partner implementations. This significantly reduces the need to modify your business applications each time EDI standards and trading partner relationships change. ▲ Refer to Section 7, "Electronic Data Interchange," for more information.

DEC MAILworks PostMaster for LANs and WANs

The DEC MAILworks PostMaster for LANs provides mail services to different PC LANs at the DOS level. The DEC MAILworks PostMaster for WANs provides a gateway into VMS and ALL–IN–1 IOS environments, as well as other mail systems on the enterprise network.

Office services made available by the DEC MAILworks PostMaster for LANs include mail within and across PC LANs, directory services, automatic mail notification and address validation, automatic conversion of mail into the user's preferred document format, virus detection, a choice of mail editors, local file cabinet, menu and system customizations, and the ability to tap network applications via mail messages. ▲ Refer to Section 7, "Electronic Messaging — Services," for more information.

DEC MAILworks

DEC MAILworks is a set of electronic messaging applications which implement the international messaging standards set by the CCITT X.400 P2 Recommendations. It provides a means of exchanging messages and attached data with other users, and is a consistent user interface across heterogeneous desktop devices in a client/server implementation.

Layered on top of Digital Equipment Corporation's VAX Message Router, DEC MAILworks applications interact with all other MAILbus gateways and complementary products.

Note: The DEC MAILworks product family was formerly named ALL–IN–1 MAIL. The Messaging Program changed the name of the ALL–IN–1 MAIL product set to DEC MAILworks. This change was encouraged by Digital field personnel and customers due to the confusion of ALL–IN–1 MAIL with ALL–IN–1 Integrated Office System. This name change will take place gradually, as new releases of the current product are distributed. New products will be named DEC MAILworks at introduction.

DEC MAILworks is a client/server implementation supporting Video Terminals, DOS PCs, Apple Macintosh PCs, DECwindows VMS workstations, and other X11 display devices. DEC MAILworks represents an upgrade path for current users of Digital's VMS Personal Mail Utility (VMSmail), DECwindows VMSmail, or the PC Mail interfaces provided with the PATHWORKS product set (formerly DECnet/PCSA). ▲ Refer to Section 7, "Electronic Messaging — User Agents," for more information.

ALL–IN–1 Desktop Integration

ALL–IN–1 desktop integration software combines ALL–IN–1 Integrated Office System and multiple desktop environments, so that they work together as one unified system. Supported desktops include DOS character cell and Microsoft Windows PCs (in desktop, laptop, and notebook varieties), Macintosh systems, VMS workstations, and video terminals.

A "client" software component installs on each desktop device. "Server" software installs on the host ALL–IN–1 IOS system, and provides the mail routing, sorting, scheduling, and user management for all the desktop clients installed. ▲ Refer to Section 7, "Electronic Messaging — User Agents," for more information.

MOBILIZER for ALL–IN–1

MOBILIZER for ALL–IN–1 allows business travelers to stay in touch with their electronic mail, even when they are out of the office. MOBILIZER for ALL–IN–1 users communicate through the familiar ALL–IN–1 interface, using distribution lists from their office-based ALL–IN–1 account.

MOBILIZER provides basic terminal emulation and bidirectional asynchronous message transfer capabilities between DOS notebook, laptop, and palmtop computers and the ALL–IN–1 Integrated Office System's Mail and File Cabinet (V2.3 and V2.4). Using the ALL–IN–1 IOS as its server, MOBILIZER for ALL–IN–1 simulates an ALL–IN–1 electronic messaging session with a subset of the ALL–IN–1 IOS Electronic Mail, Folder, Nickname, and Distribution List commands. ▲ Refer to Section 7, "Electronic Messaging — User Agents," for more information.

MAILbus 400 for ULTRIX

MAILbus 400 for ULTRIX is a set of new products built on the 1988 CCITT X.400 electronic messaging standard. MAILbus 400 ushers in the next era of electronic messaging with extended management, higher performance, international standards, and lower cost of ownership. MAILbus 400 allows customers to extend their MAILbus messaging networks to the new generation of products without disruption of their current environment. ▲ Refer to Section 7, "Electronic Messaging — ULTRIX," for more information.

MAILbus 400 Message Transfer Agent (MTA)

The MAILbus 400 Message Transfer Agent (MTA) incorporates the 1988 CCITT X.400 Message Transfer Agent with an X.500-based directory component that enables the MTAs to share routing information. It provides a messaging service to applications such as user agents and mail gateways. The MAILbus 400 MTA will be available initially on ULTRIX RISC, with VAX VMS to follow.

The MAILbus 400 MTA can exchange messages with other vendors' MTAs that conform to either the 1984 or 1988 CCITT X.400 Recommendations. It can perform conversions on the content of a message, based on which data formats the recipient of a message is capable of processing. ▲ Refer to Section 7, "Electronic Messaging — ULTRIX," for more information.

X.400 MAIL User Agent on UNIX Operating System: Alfalfa POSTE

The POSTE electronic messaging system from Alfalfa Software, Inc. provides an intuitive user interface based on the OSF/Motif Graphic User Interface (GUI). POSTE is an X.400 P2-compliant User Agent for the UNIX operating system and is available on 10 different UNIX platforms.

The modular, client/server design allows a lot of flexibility in configuring and managing the system to meet the needs of X-terminal, PC LAN, and workstation users. Message management features include group message stores that allow multiple users to access the same messages, hierarchical folders for grouping documents and messages, plus a query facility to easily find the information you need. ▲ Refer to Section 7, "Electronic Messaging — ULTRIX," for more information.

SNMP/Token Ring Proxy Agent

The Proteon SNMP/Token Ring (TR) Proxy Agent is an MS-DOS based application that monitors and manages 802.5 Physical Layer and MAC Layer entities while responding to requests for management systems such as DECmcc. Remote requests and responses are formulated as Simple Network Management Protocol (SNMP) messages over the User Datagram Protocol (UDP) transport protocol. Proper SNMP MIB support by the SNMP management system of the SNMP/TR Proxy Agent is required.

The Proxy Agent can manage a maximum of three Token Ring segments. The PC must be configured with a Proteon-4/16 Token Ring Network Interface Card (NIC) for each managed 802.5/Token Ring segment, and an additional Token Ring PC NIC to communicate with the management system. The SNMP proxy agent has no local user interface other than the installation procedure. User access is via SNMP management systems such as DECmcc. ▲ Refer to Section 8, "Additional Network Management Products," for more information.

DECinspect for VMS V2.1

DECinspect is a family of products that provide security for systems and networks. Products are software-based and include Compliance Manager, Intrusion Detector, and Security Reporting Facility.

DECinspect for VMS V2.1 is a software tool that a security or system manager uses to establish a custom security analysis and reporting system to manage the security of a network of distributed systems. With this tool, the security manager can implement and maintain a security standard that is consistent with corporate security policy for the VMS nodes in the distributed computing environment. ▲ Refer to Section 8, "Network Security," for more information.

DECinspect Compliance Manager for VMS V2.2

DECinspect Compliance Manager for VMS V2.2 is a software tool that periodically evaluates compliance of the operating system and network security settings with specified security policy. Its tests can be tailored by setting test parameters that reflect the security standards of customers. Tests and parameters are selected and modified through a menu interface. ▲ Refer to Section 8, "Network Security," for more information.

DECinspect Compliance Manager for ULTRIX V2.2 and for SunOS V2.2

DECinspect Compliance Manager for ULTRIX and SunOS periodically evaluates compliance of the operating system and network security settings with the specified security policy. Its tests can be tailored by setting test parameters that reflect their security standards. Tests for customers and parameters are selected and modified through a user-friendly menu interface. ▲ Refer to Section 8, "Network Security," for more information.

DECinspect Intrusion Detector for VMS V1.0

DECinspect Intrusion Detector for VMS is a software tool that provides real-time intrusion detection through high-priority alerts sent to system or security management personnel at the time a suspicious activity is occurring. ▲ Refer to Section 8, "Network Security," for more information.

DECinspect Security Reporting Facility for VMS V2.0

DEC Security Reporting Facility for VMS V2.0 (DECsrf) is a software tool that a security or system manager uses, in conjunction with DECinspect software (SPD 26.N1.xx), to establish a custom security analysis and reporting system to manage the security of a network of distributed systems. With these tools, the security manager can implement and maintain a security standard that is consistent with corporate security policy for the VMS nodes in the distributed computing environment. ▲ Refer to Section 8, "Network Security," for more information.

DEC ACCESSWORKS

Performance numbers for the DEC ACCESSWORKS servers are given using a Data Store database of 100,000 records and assumes a response time of under two seconds. They do not account for remote database access time. ▲ Refer to Appendix B, "Special Server Performance Guidelines," for more information.

Data Transfer Facility (DTF) V3.0

The Data Transfer Facility (DTF) V3.0 is a layered software application that allows bulk data transfer between a VAX VMS system and an IBM MVS system. The VMS DTF server and the VMS DTF client reside on the VAX VMS system and communicate with DTF for MVS on the IBM system through either a Gateway Access Server (GAS) on the DECnet SNA Gateway or through VMS SNA.

The results presented in the tables in Appendix B are a summary of the maximum observed throughputs results for the minimum record size (80 bytes) and for the optimum record size (8,187 bytes). ▲ Refer to Appendix B, "Digital to IBM Interconnect Product Performance Guidelines," for more information.

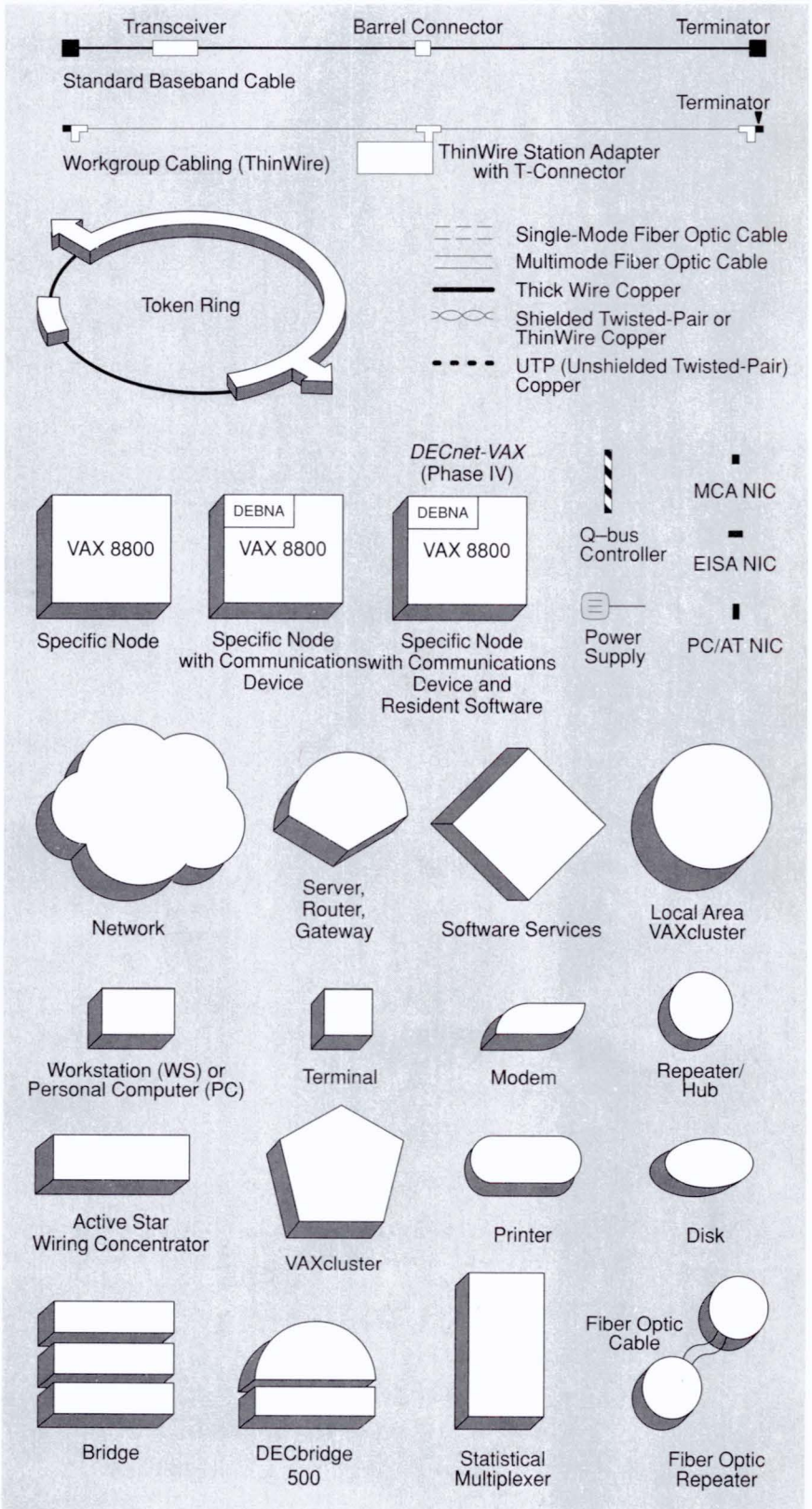
Transceiver
Barrel Connector
Terminator
Standard Baseband Cable
Terminator
Workgroup Cabling (ThinWire)
ThinWire Station Adapter with T-Connector
Token Ring
Single-Mode Fiber Optic Cable
Multimode Fiber Optic Cable
Thick Wire Copper
Shielded Twisted-Pair or ThinWire Copper
UTP (Unshielded Twisted-Pair) Copper
DECnet-VAX (Phase IV)
VAX 8800
DEBNA
VAX 8800
DEBNA
VAX 8800
Q–bus Controller
MCA NIC
EISA NIC
Power Supply
PC/AT NIC
Specific Node
Specific Node with Communications Device
Specific Node with Communications Device and Resident Software
Network
Server, Router, Gateway
Software Services
Local Area VAXcluster
Workstation (WS) or Personal Computer (PC)
Terminal
Modem
Repeater/ Hub
Active Star Wiring Concentrator
VAXcluster
Printer
Disk
Bridge
DECbridge 500
Statistical Multiplexer
Fiber Optic Cable
Fiber Optic Repeater

TBG-001-01

Legend:
Concentrator$_1$ = Ethernet 8-port Concentrator
M_1 = Remote Terminal Multiplexer
R_1 = Multiport ThinWire Repeater

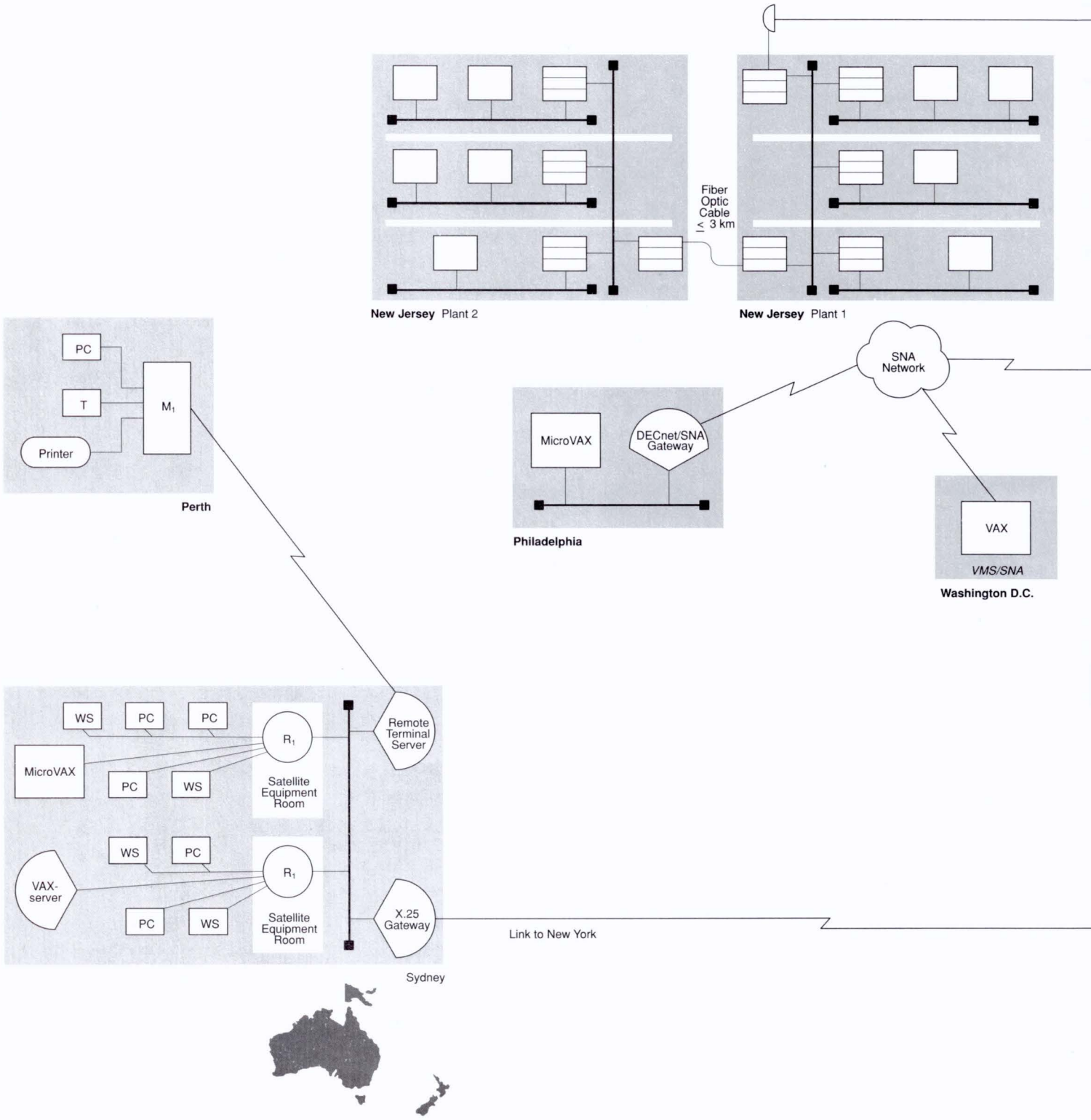

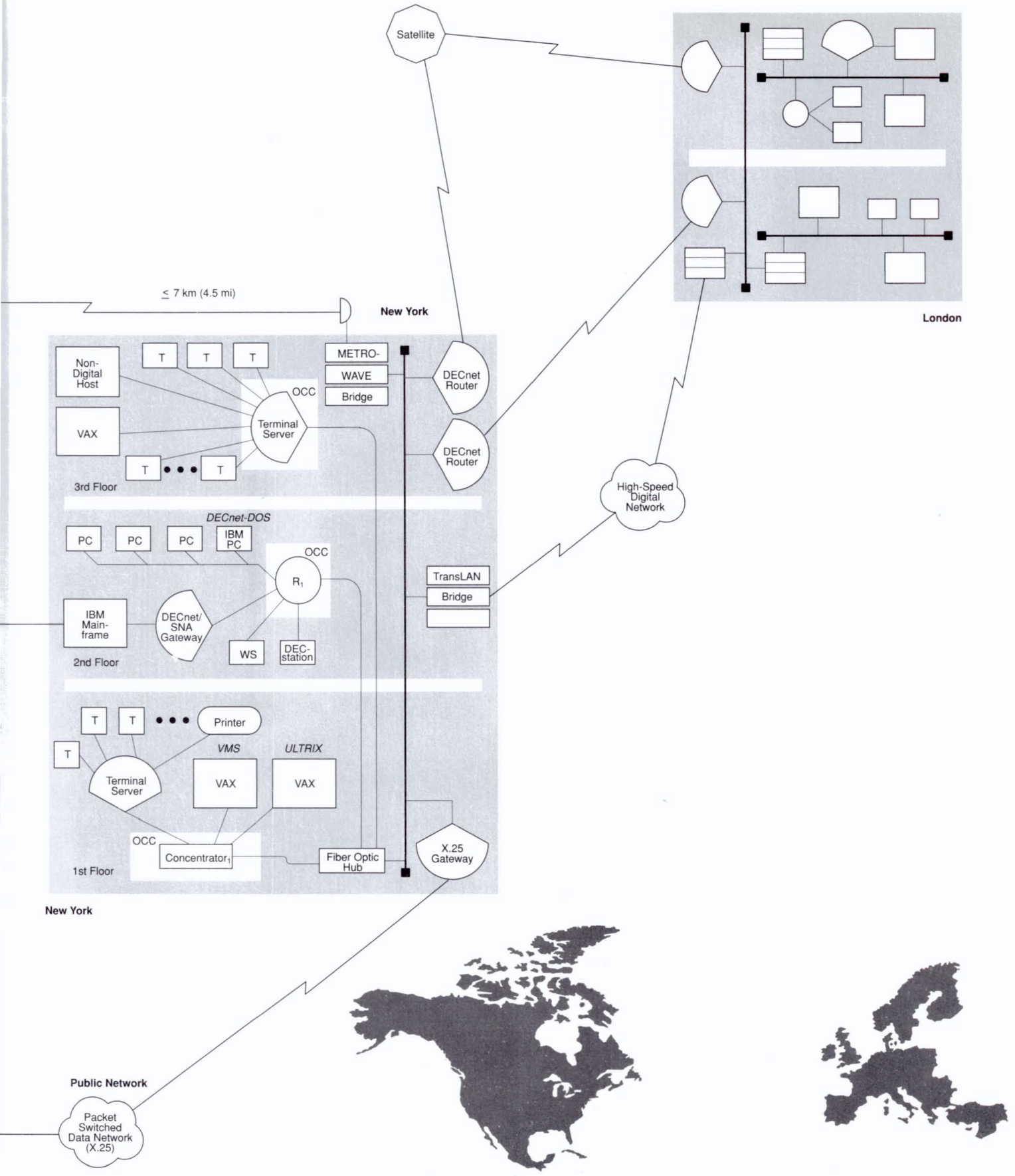
Satellite
London
≤ 7 km (4.5 mi)
New York
Non-Digital Host
VAX
T
T
T
T
T
OCC
Terminal Server
METRO-
WAVE
Bridge
DECnet Router
DECnet Router
3rd Floor
High-Speed Digital Network
DECnet-DOS
PC
PC
PC
IBM PC
OCC
R1
TransLAN
Bridge
IBM Main-frame
DECnet/ SNA Gateway
WS
DEC-station
2nd Floor
T
T
Printer
T
VMS
ULTRIX
Terminal Server
VAX
VAX
OCC
Concentrator1
Fiber Optic Hub
X.25 Gateway
1st Floor
New York
Public Network
Packet Switched Data Network (X.25)

1

Introduction to Digital's Networks

This section contains the following topics:

Overview	**1-1**
Building the Network	**1-10**

Introduction

Digital Equipment Corporation is the clear industry leader in an open networking environment that allows you to mix and match systems and software. Digital gives you the freedom to integrate systems and applications across your multivendor networks. Digital calls this freedom the Open Advantage.

The Open Advantage delivers the flexibility to choose the right system for your unique needs. Digital offers this through four key commitments:

- Standards compliance and support

  Only through a vendor's adherence to standards can you reap the benefits of open systems. Digital complies with all the major de facto and industry standards today and also plays an active role in developing new standards for the future.

- The Advanced Computing Environment (ACE) Initiative

  Digital is one of the founding members of ACE, which describes a software and hardware environment supported by more than ninety major vendors. You can choose a variety of RISC and PC systems from Digital today with the assurance that these systems will be compatible tomorrow.

- Support for the Open Software Foundation (OSF)

  Digital is also one of the seven founding members of the OSF, which drives open systems standards with open cooperation, aggressively adopting specifications while developing source code.The OSF goal is the development of specifications for a completely open software environment.

- Network Application Support (NAS)

  NAS is Digital's Open Advantage framework that supports a set of products enabling new and existing applications running in a multivendor environment to share information and resources.

Digital's corporate strategy is based on an open environment, concentrating on three pillars: Open Technology, Open Services, and Open Business Practices. Networking is an integral piece of our corporate strategy and is composed of these three major components.

Open Technology integrates the best the customer has with the best that's yet to come. Digital provides backwards compatibility of applications across almost two decades of networking. The ADVANTAGE-NETWORKS product family integrates proprietary protocols such as DECnet and SNA, de facto standards such as TCP/IP, and international standards such as OSI to provide a unified, seamless network environment. Integration of DOS, OS/2, Macintosh, VMS, ULTRIX, and other platforms through Digital's PATHWORKS family of products provides the broadest choice of desktop connectivity options.

Open Services make it all work. Extensive, diverse management capabilities with Digital's Enterprise Management Architecture (EMA) and Strategic Vendor Program ensure management of all data types with a single user interface. Network Integration Services provides comprehensive capabilities in network evaluation, site planning, and plant design.

Digital offers Open Business Practices and a commitment to do what it takes to satisfy the unique needs of your business. Our Open Licensing Program provides the capabilities for the ADVANTAGE-NETWORKS product family to run on multivendor operating systems. Agreements with industry technology leaders create an environment where multivendor software can run on Digital platforms; alliances with strategic software and hardware partners bring forth an extensive, growing portfolio of customer solution options (for example, EMA and IBM Interconnect).

Digital Equipment Corporation provides networking products, services, and capabilities that deliver computing power directly to an individual's work space. Digital's computing philosophy is based on the concept of distributed processing, which means locating powerful applications where users need them—in offices, laboratories, factory floors, or any work space that can benefit from sharing information or computing resources. Digital distributes computing power effectively through a broad range of products and services that allow computers to communicate via networking.

Organizations gain a number of benefits from arranging their computer systems into networks. Networks enable all computer users to take advantage of the organization's total computing capabilities through information exchange and sharing of resources. Small systems can access the resources and greater computing power of large systems, while large systems can off-load applications best handled by personal workstations.

Networks encourage the free flow of information throughout an enterprise by providing individuals (who have the proper security clearance) with ready access to data, applications, and people. Any computing resource can become a resource to the entire organization simply by attaching it to the network.

Typically, computers are arranged into local area networks (LANs) when organizations need high-speed data transfer and communication within a building or a cluster of buildings — such as a campus or office complex. LANs may also be coupled to other nearby LANs to extend their distance or improve performance; these are called extended LANs. Digital's LAN products are based on the following technologies:

- 802.3/Ethernet transmission standards, which provide a proven 10 Mb/s local area network technology to the desktop
- 802.5/Token Ring transmission standards, which perform at a transfer rate of 4 Mb/s or 16 Mb/s and can support both current and future applications
- FDDI, which provides a 100 Mb/s high-speed fiber-optic network
- OSI, which provides Network Operating Systems across all local area network and wide area network transmission systems

Network nodes, or intelligent devices on the network, can be distributed in different cities, or even in different countries. For transmitting data over long distances and across oceans, a network usually employs a combination of long-distance communication media including telephone lines, public data networks, satellite signals, and microwave transmission. An organization with worldwide offices is likely to configure its computers into such a wide area network (WAN). Whether the network forms a LAN, an extended LAN, or a WAN, the user sees the network function as a single entity.

An important goal of any network should be to enable equipment manufactured by different vendors to work together. Communication between heterogeneous systems is possible only if the multiple vendors agree on a set of conventions or standards for information exchange. That is why Digital is committed to building products that comply with the Open Systems Interconnection (OSI) model recommended by the International Standards Organization (ISO), and builds on standards such as 802.3/Ethernet and 802.5/Token Ring.

Digital Equipment Corporation begins with these standards and adds performance, speed, superior design, management utilities, and added functionality such as DECnet. Thus Digital provides a standards base with added robustness, reliability, and performance.

In addition, Digital supports multivendor networks by providing gateways to networks developed by other vendors, such as IBM's SNA networks and X.25-compliant systems. These gateways allow the functions of one vendor's network to be converted into functions recognizable by another vendor's network. In cases where Digital does not offer an off-the-shelf method for communicating with a different vendor's product, Digital's Enterprise Integration Center (EIC) group can build customized hardware and software to create such a link.

Digital Network Architecture

Digital's networking capabilities arise from the Digital Network Architecture (DNA). Digital has adhered to DNA since 1975; it serves as the blueprint for virtually all past, present, and future communications products. Historically, the DNA model, like the Open Systems Interconnection (OSI) reference model, is arranged in independent layers. Each layer can be changed without significantly affecting other layers; and in each layer the protocols govern communication with other layers.

Now DNA has progressed to its next phase; it complies with the OSI reference model.

Open Systems Interconnection Model

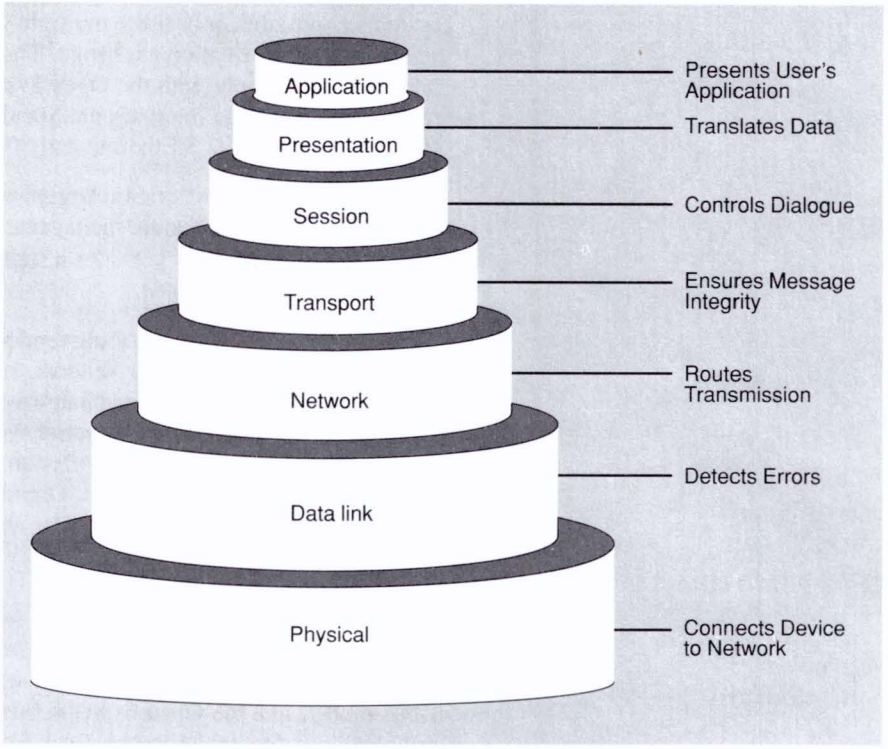

TBG-002-00

Digital's implementation of DNA is DECnet — a family of software and hardware products that link systems into a single network. DECnet software is layered on each of Digital's operating systems, allowing all Digital systems to communicate across the network with compatible functions.

The DNA layered structure has provided DECnet software with a unique adaptive quality. Since DECnet was first announced, it has progressed through four phases, with each phase providing increased capability. The ADVANTAGE-NETWORKS product family, the fifth generation of Digital networking products, provides compliance with international standards by merging DECnet and OSI. This enables you to enjoy the benefits of multivendor communication without compromising your network quality.

Digital offers freedom to users who wish to integrate computers from a variety of manufacturers into their networks through international standards. And users are assured that DECnet networks allow them to incorporate new technologies without the expense of rewriting existing applications or retraining staff.

DECnet also offers flexibility in planning. Networks can start with two nodes and expand to 85,000 nodes. And with the ADVANTAGE-NETWORKS product family, customers are able to expand their networks to hundreds of thousands of nodes. This capability becomes increasingly important as large corporations continue to connect their networks with those of their customers and suppliers.

DNA, FDDI, and 802.3/Ethernet Digital Relationships

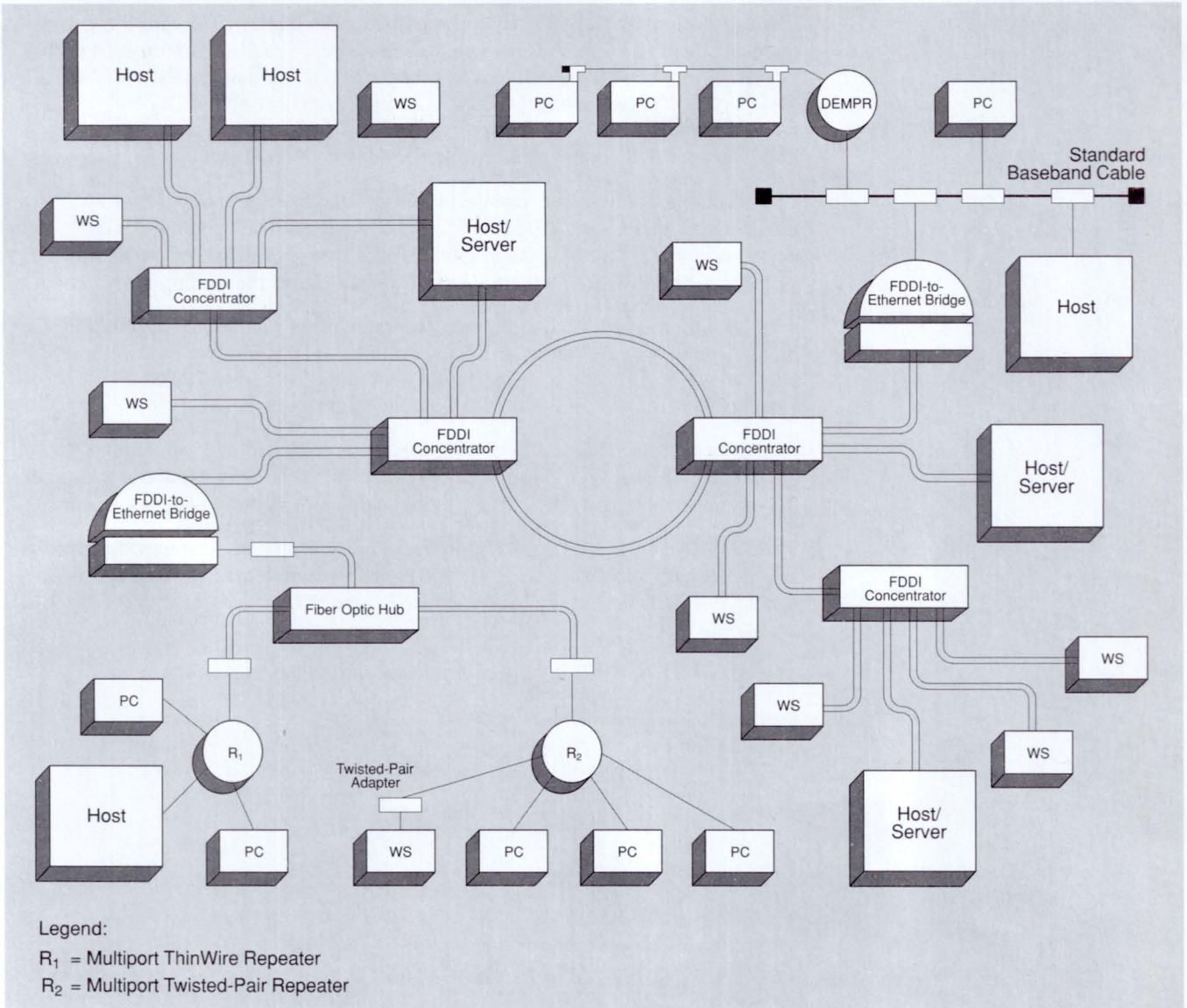

TBG-003-01

In the future, the most successful networks will function as information utilities that are available at all times to anyone who needs them. Digital envisions the integration of all communications systems located throughout an enterprise, including voice, data, and image.

Standards are a key aspect in Digital's networking vision as they are in any utility. In telephones, for example, standards enable us to go to any store, buy any brand or form of telephone, and be confident that it will work when we plug it into any phone receptacle. Strict adherence to international standards will give network users the ability to communicate anything, anywhere, at any time, regardless of distance, medium, or vendor.

The Evolution of Digital's Networks

The foundation for Digital's networking vision was laid in 1975 with the announcement of DNA. Almost two decades later, Digital's commitment to DNA is even stronger, with the delivery of four phases of DECnet and the ADVANTAGE-NETWORKS product family. And with each new phase, Digital renews its commitment to investment protection. Every device that Digital ever manufactured will communicate with every device Digital manufactures today.

In 1980, Digital, Intel, and Xerox codeveloped the Ethernet protocol for local area network technology. The IEEE 802.3 committee developed the 802.3 standard in 1982, based on the Ethernet work. Today, over half of the worldwide installed LANs are 802.3/Ethernet-based, and Digital is the leading LAN vendor.

In 1983, Digital made a commitment to communicate in multivendor environments. Today, we offer many direct connections to IBM products and comprehensive gateways to IBM networks. Digital also supports links to UNISYS, Hewlett-Packard, ICL, and other equipment manufacturers.

A plan to integrate OSI standards into DNA was launched in 1985. Digital announced DECnet OSI Phase V in 1987, becoming the only vendor at that time to commit to making its proprietary architecture comply fully with OSI standards.

The ADVANTAGE-NETWORKS product family, which integrates OSI standards into DNA, was announced in 1991. Today, the base protocols are DECnet, OSI, and TCP/IP with access to DECnet Phase IV and SNA. Tomorrow, the scope could be wider still.

The ADVANTAGE-NETWORKS product family today consists of

- Multiprotocol Network Software
  - DECnet OSI for ULTRIX (formerly Phase V)
  - Extensions for DECnet VAX V5.4
  - DECnet OSI for VMS (formerly Phase V)
  - ULTRIX TCP/IP
  - TCP/IP Services for VMS
  - OSI Application Developer's Toolkit
- Multiprotocol Network Hardware
  - DEC Network Integration Server 500/600
  - DEC WANrouter 100/500
- Multiprotocol Network Management
  - DECmcc
  - Management Station for ULTRIX
- IBM Interconnect
  - DECnet SNA Domain Gateway

What People Expect from Networks Today

Networking has made great strides in recent years, fueled by dramatic changes in the marketplace. For example, the "globalization" of business has created a need to sell and service products worldwide. This has led to a dependence on technology and a rethinking of the whole concept of communication.

The ability to master technology has become an important factor in keeping a company competitive. Companies that invested heavily in computers to increase efficiency now realize that unconnected islands of computers can lead to information bottlenecks. Distributed computing can solve this problem by allowing for more decision making at the hands-on level. Furthermore, networks can help companies respond more rapidly to the shifting demands of the marketplace by making more timely and accurate information available to decision makers.

At the same time that computers have proliferated, technological development has accelerated. Managers want to know what direction technology will take in order to incorporate constantly changing technology into their planning cycles. They want the freedom to purchase systems from multiple vendors. Furthermore, they need to match new technology with the corporation's past and present investments in hardware, software, and applications.

Companies want their network supplier to be a partner in their business. They want this partner to be able to provide solutions to their individual problems. And, they want this partner to save them money by maintaining and upgrading existing systems while incorporating new technology.

To accommodate these pressures, users and managers want networks that are easy to install, change, and operate. They want a lateral, open, and flexible flow of information to help managers cope with changes.

Digital's massive company-wide network, EASYnet, is a good illustration of the functions people now expect from networks. Digital's network was established in 1978 with fewer than ten nodes. Today, EASYnet is the world's largest private data network, with users in 500 locations on three continents. It connects more than 100,000 users and 32,000 computers (including PCs) worldwide, and is growing at the rate of 200 new nodes per week. EASYnet plays an important role in Digital's product development and testing, manufacturing, distribution, and marketing. Digital employees use the electronic mail application to communicate with Digital facilities all over the world. And while network users exchange critical information, they need not be concerned about how data physically passes through the network because it is transparent.

Digital's Strategic Networking Vision

Digital's Strategic Networking Vision has been to provide the ability to communicate anything, anywhere, anytime. In the future, companies will expect the functional integration of all communications systems throughout the enterprise.

The framework that organizes the technologies required to implement Digital's Strategic Networking Vision divides networking functions into four areas: Connectivity, Interoperability, Distributed Applications, and Manageability. The *Networks Buyer's Guide* organizes Digital's networking products and services into categories that reflect these four functional areas.

Connectivity

Connectivity is the ability of the network to move any piece of information from point A to point B, regardless of the media or transmission technologies. Digital offers products to simplify the physical and logical connections in a network and enable every device to utilize the power of the entire network. Products included in the Connectivity category enable networking devices to participate in an overall system and utilize the full power of a network.

Interoperability

Interoperability enables all system elements to exchange information between equipment regardless of whether information is from the same vendor, or from a collection of vendors who support the integrity of the network. Users need

- Bidirectional exchange of information and files
- Support for major equipment vendors
- Compliance with standards
- Capabilities for participating in the enterprise network, regardless of the desktop system being used

Distributed Applications

Distributed Applications are the measure of the value and usefulness of the network and are a primary reason the network exists. Distributed applications can be accessed via a network as easily as if they were on a single system. People use Digital networks to access and utilize enterprise-wide applications, such as

- X.400 electronic mail
- Computer Integrated Telephony (CIT)
- ALL-IN-1
- Videotex/electronic conferencing
- File transfer

Manageability

Manageability provides the network capabilities as well as the product and service mix that

- Enables customers to plan, design, implement, and manage the performance of the entire network
- Manages change in a responsive and flexible manner

Future Directions

Digital maintains its position as the performance leader in open networks through its continuing commitment to standards as they evolve and by adding performance to those standards, which include: IEEE 802.3 10BaseT, EIA/TIA Building Wiring Standard, OSI, X.400, and FDDI station management. Added functionality shall be provided through DECnet as well as open network management and increased high-performance capabilities.

Digital continues to enhance functional gateways to non-OSI networks and vendors. Network users have consistent user interfaces for easy access to distributed applications such as DECnet System Services. Digital will also continue to provide comprehensive network management through OSI-based open management interfaces for multivendor support and through enhanced life-cycle network management services.

An organization's success in networking is directly correlated to its ability to respond to new business, redeploy resources, and aggressively seize competitive advantages. Digital has defined its vision today to help customers plan networks that fulfill their vision tomorrow.

Analyzing an Enterprise's Needs

A network is the outgrowth of the way an enterprise conducts business and is implemented to facilitate the productivity of the organization, the department, and the individual. To succeed, an enterprise must examine its business, information, and systems architectures; its product architecture must support successful information flow.

Business Architecture

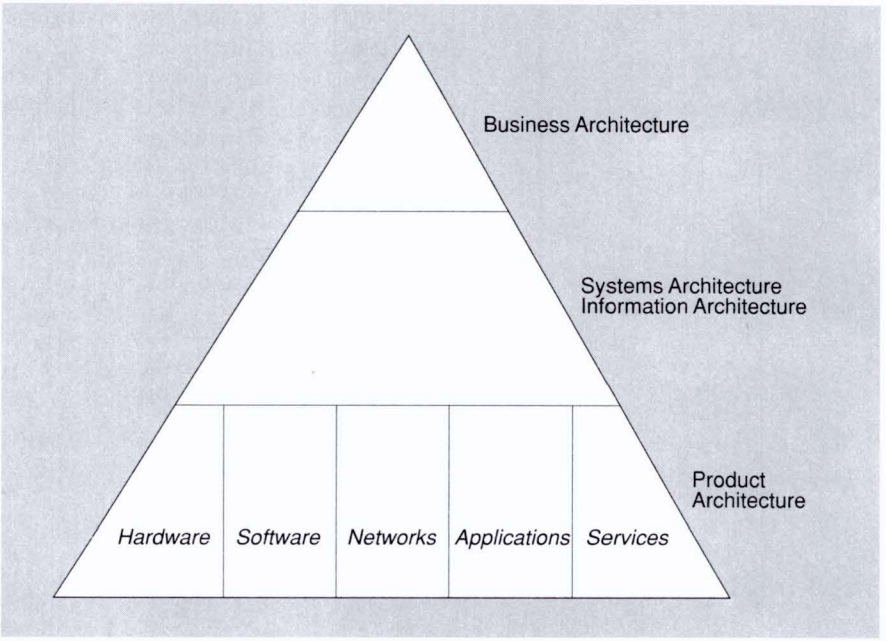

TBG-004-00

Within the product architecture are segments — hardware, software, networks, applications, and services — that support the information architecture. The network is part of the total solution. Current and future requirements must be satisfied at every level of the organization to get the most from any network implementation.

For instance, you must examine how and where information moves through an enterprise, and consider the present and future requirements of the people who communicate and share information, as well as those who access common resources that support the information architecture.

To plan and design a new network, or to integrate an existing network, you should examine:

- The way you do business.
- Your future requirements.
- The way a data communications network can foster intraorganizational cooperation.

You must weigh the productivity of any networking solution against the cost of that solution, and you must consider the performance and reliability of alternatives. You should know the impact of each technology, now and in the future, and couple the decision to support a technology with a sensitivity for business and organizational issues. ▲ Refer to Section 9, "Services for the Planning and Design Phase."

Because the network architecture supports the information architecture — which in turn supports the enterprise business architecture — you must select the technology that will succeed and consider:

- What networking or communications standards fit your needs.
- How fast each department requires data.
- Which communications wiring scheme provides functional growth, flexibility, and cost efficiency.

Digital's Networking Products

Digital examines each business situation from the customer's point of view and provides a comprehensive solution — whether it's a specific product, a wiring scheme, connections to Digital and non-Digital hosts, or local or geographically dispersed networks.

Digital has the hardware, software, and service products to cover many environments (depicted in the topology at the end of this section). Digital ensures its products are compatible — designed and tested to run together, applied in a consistent manner, managed with a consistent interface, and supported by consistent service and support. Because of this approach, the whole is greater than the sum of the parts.

The networking products described in this *Buyer's Guide* are compatible, have consistent interfaces, are well tested, readily adjust as the network grows, and provide one of the most flexible solutions in the industry.

Product Testing

Transparent to the user are Digital's very strict testing standards consisting of a multimonth — sometimes multiquarter — test sequence that places a product in many types of networks starting on a small level, then growing in size, distance, and complexity.

For example, a terminal server is tested with all of Digital's products, in all sizes of networks, and with varied data loads, thus assuring customers that it meets their needs today and in the future. This is a key reason Digital's networking products meet the customers' long-term management and reliability goals.

Product Solutions That Adjust to the Scale of the Network

Since Digital's networking products perform within a consistent architecture, they scale well, that is, they adjust to communications requirements as the network grows and changes. This feature allows you to implement a network as little or as large as your enterprise requires — even starting with a one- or two-computer terminal-server network. You can scale up, adding the incremental cost of just one piece of equipment and be assured that everything works properly. You don't have to add a half-million dollar front-end processor to acquire the next terminal.

Matching your organization's growth with networking capabilities is a result of the product design and testing, and products that scale well. You can systematically add incremental equipment and implement a long-term strategy to build and expand your network, comfortable that all components will continue to work together.

Products that adapt well provide users with the flexibility to react quickly and easily to changes in an organization. If there's a sudden change in your strategic plan — your enterprise adds a department or division, or adds an entire building — the network adjusts to that change immediately.

An Example of a Network Solution Using Open Systems Interconnect

Digital's commitment to integrate Open Systems Interconnect (OSI) standards into the DECnet architecture provides a truly open architecture — another key benefit that protects an enterprise's investment and helps long-term planning. Digital's customers can build an enterprise-wide network that easily accommodates all OSI-compliant equipment — including equipment from other vendors.

As an example of Digital's enterprise network capabilities — which include OSI-based solutions — consider the hypothetical Baker Company, which uses the networking products depicted in the topology at the end of this section.

Baker Company operations have:

- A centrally located headquarters in New York with another building located across the river in New Jersey
- Many remote sales and distribution sites across the United States
- A European headquarters in London
- A Pacific Basin headquarters in Sydney, Australia

A critical factor for Baker Company's success is to share data files and electronic mail among all sites.

Baker Company's London office has two non-Digital, OSI-based mainframes that communicate with departments in the New York headquarters to exchange files and mail.

New York-to-London Connection

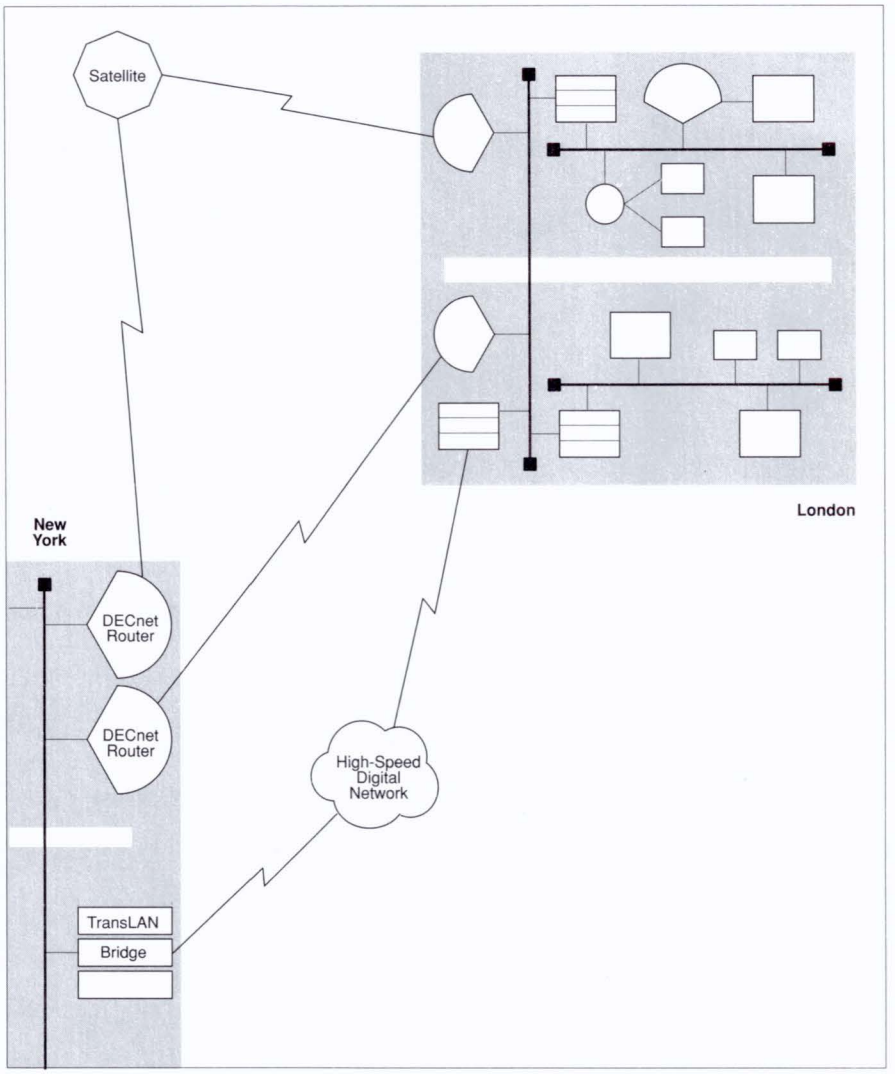

TBG-005-00

The data can be communicated through:

- The DECnet routers using leased lines.
- Another pair of DECnet routers using an X.25 link.
- The TransLAN bridge involving a high-speed Digital network.

With this redundancy, Baker Company can choose the technology to best handle the required data volume or speed.

Because 802.3/Ethernet is part of the OSI network, the communications logical link can connect with any OSI device on the 802.3/Ethernet local area network (LAN). Baker Company knows that any two pieces of OSI-based equipment can interoperate because they are based on the same international standards, and they can readily communicate across the 802.3/Ethernet LAN.

Baker Company transfers files from the London OSI mainframe to the VAX system in New York using File Transfer, Access, and Management (FTAM) software, based on the OSI reference model from the International Standards Organization (ISO). FTAM provides for copying and deleting files, and displaying information about files between ISO FTAM-compliant systems in a multivendor network.

An X.400 mail message moves across a similar path utilizing the VAX Message Router X.400 Gateway MRX, a layered application that provides a path for any message transfer service conforming to the CCITT X.400 recommendations.
▲ Refer to Section 5 for OSI and FTAM products, and to Section 7 for X.400 mail capabilities.

Local Area Networks (LAN)

The engineering department on the second floor of the New York building has many IBM PCs and VAXstations. A tremendously important function for Baker Company is bringing the power and convenience of multivendor PCs and workstations into the Digital environment to share the benefits of the local area network. The clear benefit to the engineering department is the access to the VAX processors — file services and other applications the VAX processors provide — while using the installed PCs and workstations.

In the New York headquarters (third floor), Baker Company has many terminals, for its sales administration department, that are used to share files among VAX and non-Digital hosts located on the same LAN, and with other LANs in the same building. Information is processed on the third-floor LAN, then transferred to engineering operations on the second floor, which has a high-speed computing environment. The data files are also exchanged with the first-floor LAN, which houses Baker Company's finance and administration department.

New York Local Area Networks

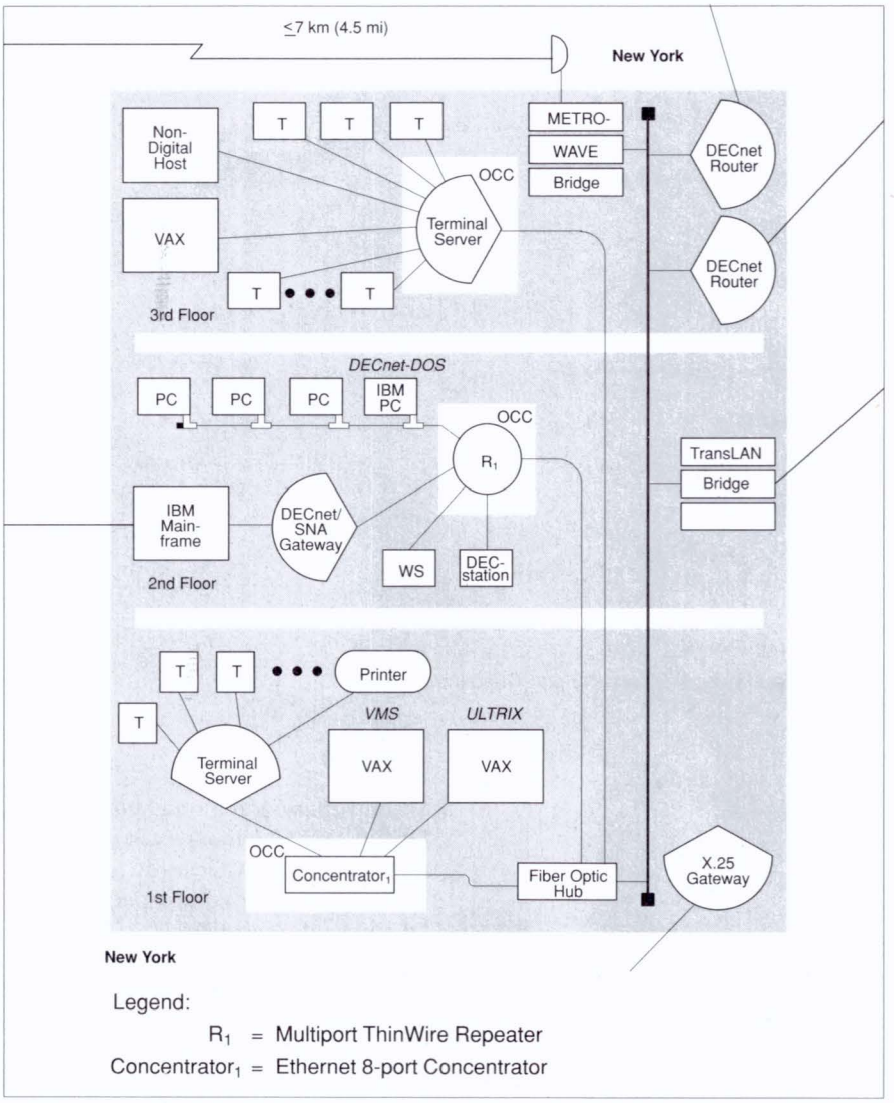

TBG-006-00

Baker Company has optimized its IBM Digital connection by using its Digital desktop workstations to run application programs that reside on the IBM host, and by taking advantage of DECnet SNA transport services.

For instance, VMS SNA software allows the remote engineering site in Washington, D.C., which computes engineering data on a VAX, to communicate directly with the IBM mainframe on the second floor of the New York building.

Baker Company also found it could have a network-to-network connection (Digital's DECnet software to IBM's SNA environment) with high-volume output on existing equipment from the Philadelphia site using a DECnet SNA Gateway (DECnet SNA Gateway-ST).

New York – Washington – Philadelphia Connection

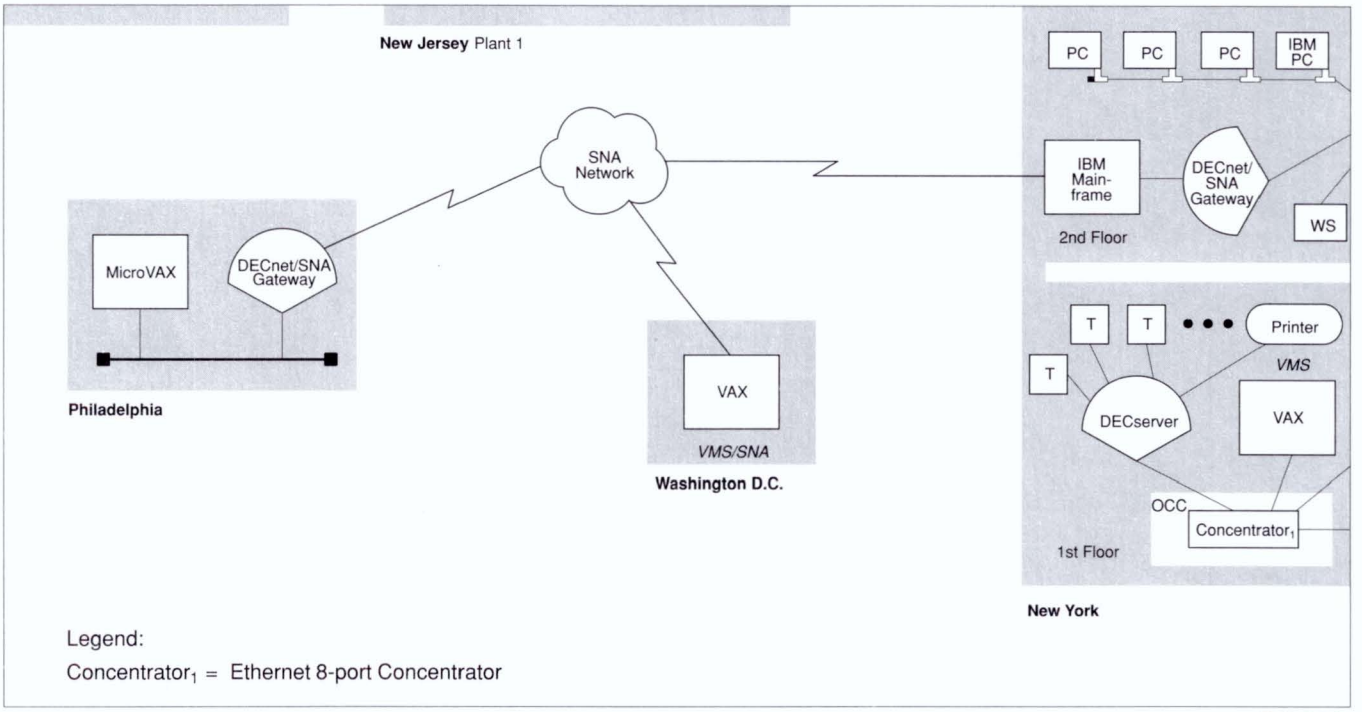

TBG-007-00

When volume and throughput warrants, Baker Company can upgrade the DECnet SNA communications link on the second floor of the New York building to a DECnet SNA Gateway for Channel Transport to handle more users and more sessions at higher throughput. ▲ Refer to Section 5 for information on DECnet SNA capabilities.

Baker Company found that departments such as engineering enhanced its operations and improved its productivity by using DECnet System Services; networking products that facilitate distributed processing with consistent, transparent, network-wide services. From anywhere in the network users can share and manage network resources as if these resources were directly attached to the local system.

All the engineering department sites, for example, use engineering specifications updated nightly in a master file. Using DECnet System Service, once the master file is updated, the local engineering sites have access to current engineering specifications. DECnet System Service provides a seamless, transparent means of accessing printing, file-access, and software management services for centralized or decentralized systems. ▲ Refer to Section 7 for information on DECnet System Services.

In the management of the multivendor networks, ETHERnim and LAN Traffic Monitor provide up-to-the-minute configuration, fault, and performance information in clear graphic formats.

Extended LANs

Each floor of the New York building has its own LAN — a LAN bridge connects each LAN segment to the vertical fiber backbone. These departmental LANs connected by LAN bridges, called extended LANs, provide the same data-throughput benefits as a LAN, extend the geographic reach of the network, and provide performance benefits.

By connecting the departmental LANs in the New York building to the vertical backbone, Baker Company can direct its business and topological requirements throughout the network. The engineers on the second floor have high data flow within their departmental LAN, as well as to other LANs. The intelligence of the LAN bridge allows it to act as a filter. Information destined for the same department stays within that LAN, while information destined for other departments is transmitted (forwarded) across the extended LAN.

New York Departmental Networks

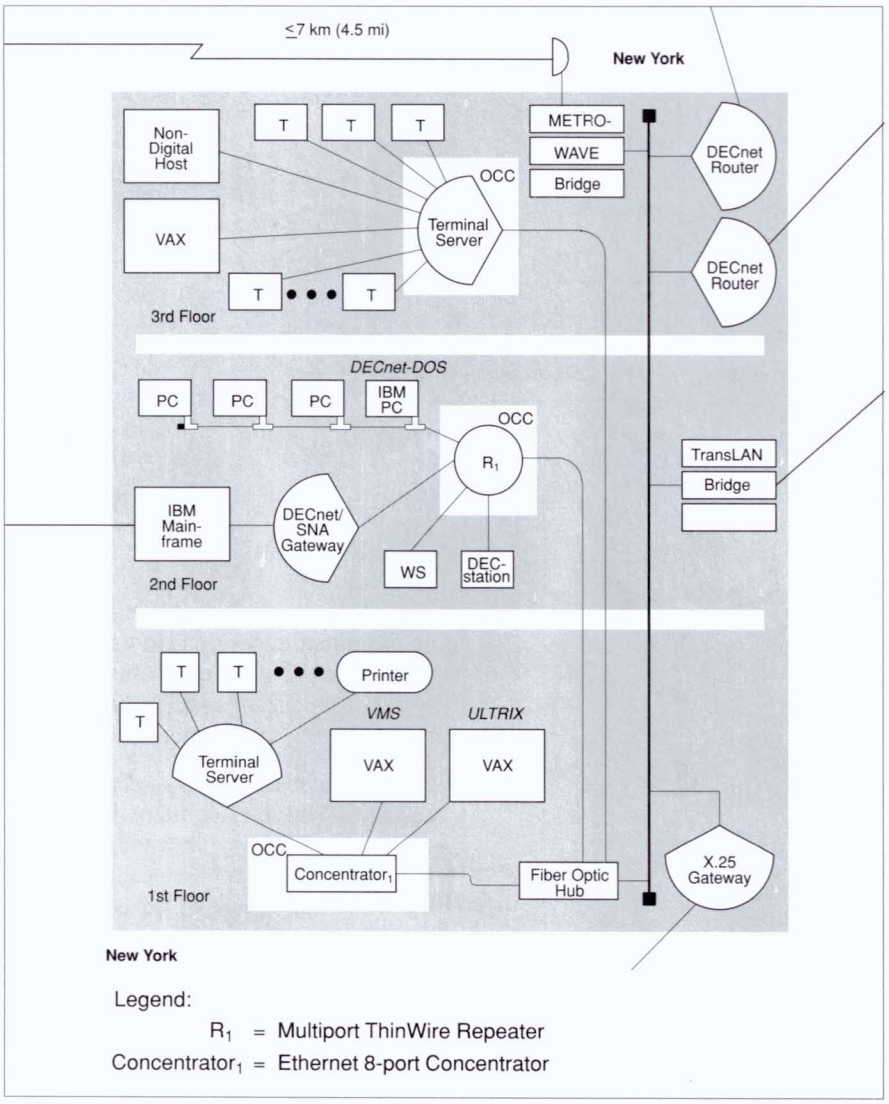

TBG-006-00

The filtering of data traffic allows Baker Company to have very high network performance on each floor and within each departmental LAN. The company retains the high-performance of a single LAN without impacting the other LANs on the backbone. DECelms simplifies the configuration and fault management of this extended LAN.

Baker Company also has a research campus in New Jersey. Two of the campus buildings need to communicate with the same functionality and benefits as a single LAN within a single-management entity. These buildings are connected with fiber optic cable attached to LAN bridges on either end. This allows Baker Company to connect two buildings up to 3 km (9,840 feet) apart with the same high-performance as any Ethernet LAN. The LAN bridge provides traffic isolation between the buildings and Baker Company benefits from fully functional 802.3/Ethernet networking.

New Jersey Buildings Connected via Fiber Optic LAN Bridges

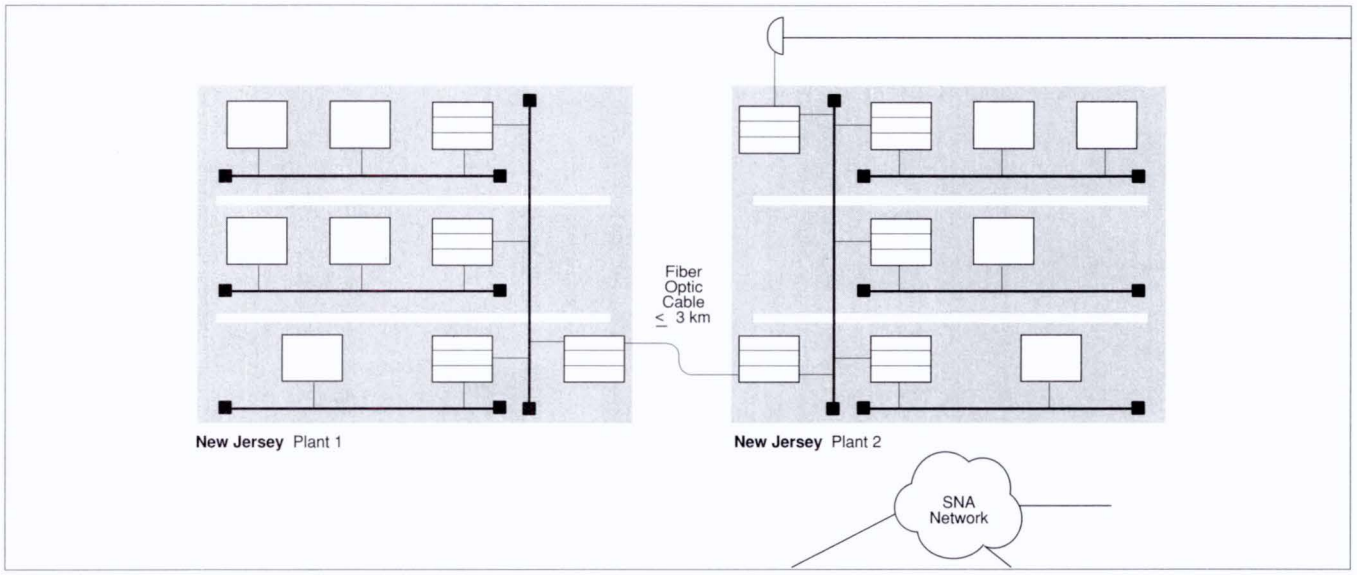

TBG-009-00

The fiber optic link provides Baker Company's research department with an environment impervious to lightning and electrical interference. Also, because fiber optic cable is very difficult to tap into, it provides a secure environment — something that is very critical to the research department. (▲ Refer to the FDDI product descriptions for information on FDDI and its fiber backbone.)

To communicate research information between its New Jersey research campus and New York headquarters, Baker Company had communications options to connect the building sites via leased lines, fiber optics, or microwave link. Because Baker Company could not obtain the rights to lay fiber optic cable under the river, and the use of leased lines might be cost-prohibitive, it selected a METROWAVE bridge that uses line-of-sight microwave transmission.

New York-to-New Jersey Connection

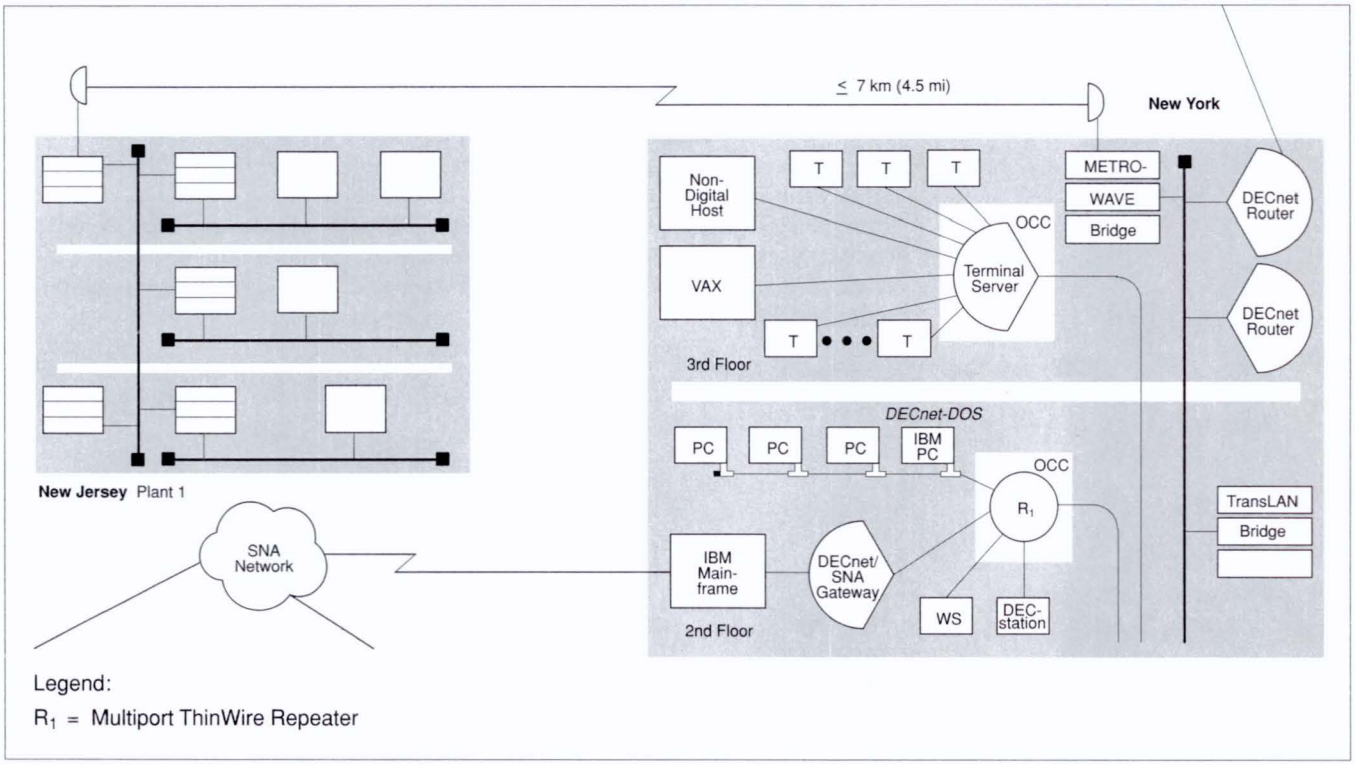

TBG-010-00

The METROWAVE bridge provides a microwave connection in an extended LAN environment, using the LAN Bridge 150 or 200 to deliver the same high performance, filtering capability, and reliability as other LAN Bridge products. ▲ Refer to Section 2, "METROWAVE Bridge."

Wide Area Networks (WAN)

Baker Company found, as many businesses have, that long-term success depends on wide area networking using a combination of data, voice, graphics, and image technology.

Digital provides an integrated set of wide area network (WAN) products, several of which are depicted in the topology. One of the most frequently used connections is via a public Packet Switched Data Network (PSDN), which sends packets of information over leased telephone lines.

For example, when moving information from London to New York with OSI-based equipment, VAX P.S.I. (Packetnet System Interface) provides a means of returning packets to London across leased lines. The DECnet Router (DECrouter 2000)-to-satellite (or leased-line) connections, or TransLAN bridge-to-leased-line connection involves DECnet software and provides different value in flexibility, technology, and cost. ▲ Refer to Section 5 for information on Packetnet Communications.

When Baker Company expanded its business to the Far East, it established the Sydney headquarters for sales administration, promotions, and distribution administration. Baker essentially decentralized a heavy desktop/office automation environment to Sydney, and extended the use of computers to the Sydney workforce.

Within the Sydney building, Baker Company installed the networking computers using Satellite Equipment Rooms (SERs) that adhere to the OPEN DECconnect radial-wiring strategy. Baker Company's remote sales offices in the Far East are connected to Sydney headquarters via the MUXserver remote terminal server. The MUXserver connects to modems over leased lines, then directly to the Sydney Ethernet LAN for the most cost-effective connection to the terminal-only remote offices.

Sydney Building and Remote Office Connected to New York via X.25 Link

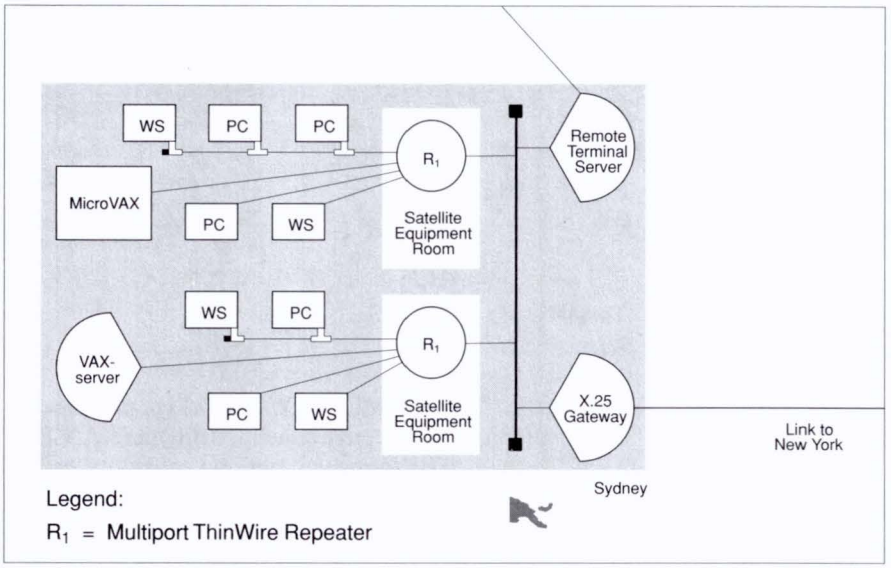

TBG-011-00

The Ethernet LAN in the Sydney building communicates with New York headquarters via an X.25 Gateway (X25router 2000) connected through the Packet Switched Data Network (PSDN). The X25router 2000 provides the optimum bandwidth-efficient solution with high-speed data communications based on the required data flow and volume.

Digital provides a comprehensive product set that meets the needs of any enterprise, in any environment, using compatible hardware, software, and service products that have been tested to perform together within a consistent architecture, a consistent service strategy, and a consistent management interface.

Network Management

Digital provides DECnet software with network self-management capabilities, as well as the DECmcc family of management products, which perform network monitoring and other complex management tasks. The combination of the inherent capabilities of DECnet software and the network management applications provide a very high level of up-time and network availability.
▲ Refer to Sections 8 and 9 for information on Network Management Products and Services.

2

Connectivity: 802.3/Ethernet Local Area Network

This section contains the following topics:

802.3/Ethernet Overview	2-1
Typical 802.3/Ethernet Applications	2-10
802.3/Ethernet Products	2-17
802.3/Ethernet Twisted-Pair Products	2-30
802.3/Ethernet ThinWire Products	2–36
Other IEEE 802.3/Ethernet Repeaters	2-42
OPEN DECconnect Overview	2-47
OPEN DECconnect Products	2-59
Wiring Hubs	2-72
Fiber Optic 802.3/Ethernet Products	2-77
802.3/Ethernet Communications Controllers	2-79
802.3/Ethernet System Controllers	2-82
Extended 802.3/Ethernet Local Area Network Products	2-90
802.3/Ethernet Communications Servers	2-108
802.3/Ethernet Special Purpose Servers	2-134
Routers, Bridges, and X.25 Gateway Services	2-148

Connectivity: 802.3/Ethernet Local Area Networks

A local area network (LAN) is a privately owned data communications system that offers high-speed communications channels optimized for connecting information-processing equipment. A LAN usually serves a section of a building, an entire building, or a cluster of buildings.

Local area networks provide a fast, efficient means of exchanging information. They allow many varieties of information processing equipment to be easily connected and provide resource sharing, which allows users to share expensive peripheral devices and databases. 802.3/Ethernet local area networks expand the possibilities for global resource sharing by offering standards for communication between equipment of different vendors and between local and remote networks.

Digital uses the IEEE 802.3/Ethernet standard for its local area network. 802.3/Ethernet networks provide full 10 Mb/s access to data with a high data-transfer rate that makes information and resource sharing practical.

802.3/Ethernet LANs can be implemented on several media, including twisted-pair, ThinWire coaxial cable, standard baseband coaxial cable, and fiber optic cable. Also supported is broadband coaxial cable, which offers customers the ability to put 802.3/Ethernet on the same network wiring system with video, voice, and other data communications.

IEEE 802.3 Compliance

Digital LAN products are designed to comply with the IEEE 802.3 specification. In addition, Digital LAN products are backward compatible with Ethernet V2.0 products. This ensures connectivity between products. The IEEE 802.3 standard has been adopted by the International Standards Organization (ISO), defining layers "1" and the MAC layer portion of layer "2." Digital is committed to international standards, allowing customers the benefit of multivendor networking and flexibility in choosing networking products. Connectivity is the ability to move any piece of information from one point to another, regardless of media or transmission technologies.

802.3/Ethernet Advantages

Today, 802.3/Ethernet is the most widely implemented LAN, and has become the LAN standard. The 10 Mb/s performance of 802.3/Ethernet can support LANs with as few as three intelligent devices, or as many as 8,000 in a single extended LAN. When more demanding applications require higher-performance, Digital offers 100 Mb/s Fiber Distributed Data Interface (FDDI). Digital's FDDI strategy includes compatibility with 802.3/Ethernet networks. ▲ Refer to Section 3 for more information on FDDI.

802.3/Ethernet Transmission Technology

The technique used to access the 802.3/Ethernet channel is called Carrier Sense Multiple Access with Collision Detection (CSMA/CD). CSMA/CD can be defined as follows:

- Carrier Sense (CS) — A device listens for a clear channel before transmitting. If the channel is in use (Carrier Sensed), the device delays transmission.

- Multiple Access (MA) — Many devices can be connected to one common wire, and when the channel is clear, all devices have equal access to it.
- Collision Detection (CD) — Two or more devices may sense a clear channel and simultaneously try to transmit. This results in data collision. The device senses the collision condition, stops the transmission, and automatically retransmits the data after waiting a randomly selected amount of time.

Ethernet Media Options

Digital's 802.3/Ethernet LANs can run on a variety of wiring or cabling media. Standard baseband and ThinWire coaxial cables, and both shielded (IBM) and unshielded twisted-pair are supported. Digital also supports fiber optic cables for Ethernet LANs, providing fiber links between bridges and repeaters. Thus, Digital 802.3/Ethernet LANs are virtually media-independent. Through Chipcom, Digital also supports 802.3/Ethernet fiber optic backbones.

The original Ethernet media were baseband and broadband coaxial cables optimized for maximum 10 Mb/s Ethernet speeds and maximum distances. These were specified into the IEEE 802.3 standard.

A thinner version of baseband coaxial cable, called "thin net" or "cheaper net," was also approved for the standard. ThinWire — Digital's super set of the thin net standard — like the standard is easier to work with, but supports shorter distances than standard baseband coax.

As the technology advanced, unshielded twisted-pair (phone wire) was also used for 802.3/Ethernet LANs. Both shielded (IBM) and unshielded twisted-pair cable are supported for Digital 802.3/Ethernet LANs.

Although Digital supports many cable types, it recommends the following types for optimizing multiple applications.

- Fiber optic 62.5/125 micron multimode, recommended for new LAN backbone installations and single-mode for planned growth.
- Twisted-pair, unshielded and shielded (IBM), 10BaseT and EIA/TIA 568 Building Wiring Standard is supported.
- ThinWire, recommended for communications between workstations, personal computers, and low-end systems in local work areas on a floor.

Recommendation for LAN Backbones

The recently announced OPEN DECconnect System Fiber Optic Network is Digital's first physical star-wired fiber optic-based structured cabling system providing full fiber-based connectivity from the network backbone all the way to the desktop if desired. This announcement illustrates how Digital is rapidly evolving its 802.3/Ethernet networks to comply with emerging standards such as EIA/TIA 568 Commercial Building Wiring Standards TR41.8.1, TIA/CSA committee's drafts and the ANSI X3T9.5 committee standards for Fiber Distributed Data Interface (FDDI). This evolution is reflected in Digital's increasing emphasis on the use of fiber optic cable as the preferred LAN network backbone cable media. Additionally, this change in cable media will be combined with Digital rapidly increasing the number of fiber optic-based star-wired 802.3/Ethernet backbones it specifies, installs, and maintains.

These changes will offer the highest performing standards-based local area network solutions, which will ensure the customer with extended useful network life, multivendor connectivity and transparent integration path to FDDI, and other yet-to-be defined ultrahigh-speed LAN technologies.

Recommended LAN backbones include:

- Physical star-wired designs as specified by EIA/TIA 568 Building Wiring Standards.
- Industry standard specified 62.5/125 micron multimode, dual-window fiber optic cable that is designed and optimized for both Ethernet and FDDI applications. ▲ Refer to "802.3/Ethernet Products" in this section for further information on fiber optic cable.

Standard Baseband 802.3/Ethernet Cabling

Using standard baseband cabling, an 802.3/Ethernet communications controller in a network system connects to a transceiver using a specialized 4-shielded, twisted-pair wire transceiver cable. The transceiver is clamped onto the standard baseband cable without cutting the cable or interrupting data transmissions.

A maximum of 100 transceivers can be used on a standard 802.3/Ethernet cable segment. A single cable segment can be up to 500 meters (1,640 feet) long. Multiple cable segments can be linked together with barrel connectors. Multiple segments of transceiver cable can be linked together by slide-latch connectors on the ends of standard transceiver cable.

A repeater or bridge connects segments of standard baseband 802.3/Ethernet cable creating a larger local area network.

Baseband Ethernet Cabling Layout

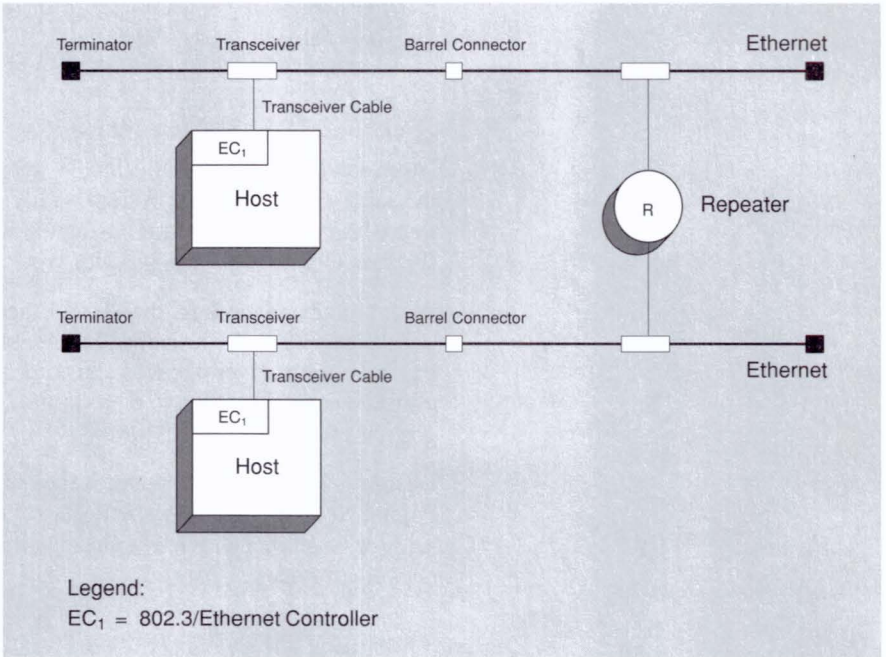

TBG-013-00

ThinWire 802.3/Ethernet Cabling

ThinWire 802.3/Ethernet cabling, simple thin coaxial cable based upon the IEEE 802.3 10Base2 specification cable with BNC connectors, enables the configuration of local area networks in the work area. ThinWire coaxial cable delivers 10 Mb/s 802.3/Ethernet performance, like standard baseband coaxial cable, and is specifically designed for horizontal wiring of a work area because of its ease of installation. This provides full 10 Mb/s speed to the desktop for PCs and other intelligent workstations.

ThinWire Cabling Layout

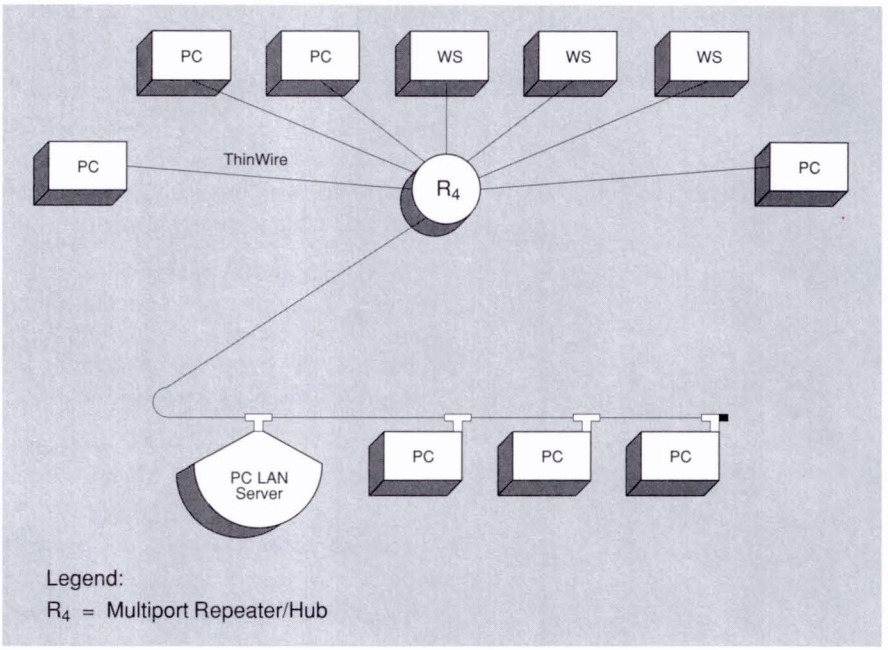

TBG-014-00

Broadband 802.3/Ethernet Cabling

Broadband 802.3/Ethernet offers customers the ability to put 802.3/Ethernet on the same network wiring system with video, voice, and other data communications. It is most feasible for customers who must distribute multiple information services to a large user population over an extensive local area.

With broadband cabling, the 802.3/Ethernet communications controller in the node connects to the broadband transceiver using the same 4-shielded, twisted-pair wire transceiver cable as standard baseband. In turn, the broadband transceiver is connected to a tap in the broadband network cable via a broadband coaxial drop cable.

Design, installation, and maintenance of all networks are available as part of Digital Network Services. ▲ Refer to Section 8, or contact your local Digital sales or Customer Services representative for more information on broadband network services.

IEEE 802.3/Ethernet Communications Controllers

Communications controllers implement the Ethernet or IEEE 802.3 data link layer functions and CSMA/CD protocol to make electrical connections between 802.3/Ethernet systems. An 802.3/Ethernet communications controller must be installed in systems that connect to an 802.3/Ethernet local area network.

Servers

A server is any network node that provides a resource that can be shared by other nodes on the network. (A node is any intelligent device that can send and receive messages over the network.) Many different types of servers are available: terminal servers, computer servers, disk servers, application servers, router servers, gateway servers, and print servers. A computer in a LAN that offers these types of services, whether or not it is dedicated to that function, may be viewed as providing server functions. The following figure illustrates the various types of servers for baseband or broadband networks.

Generic LAN Servers

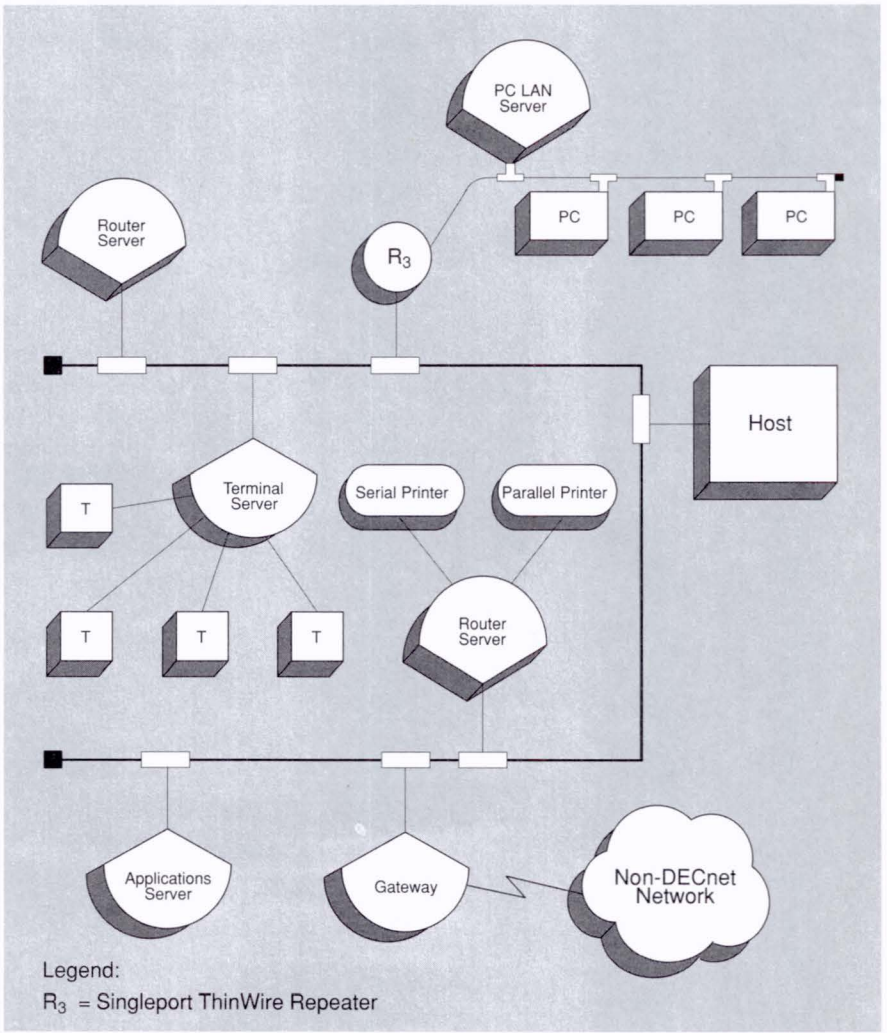

TBG-015-00

A node providing server functions can run other applications if its nonprocessing services do not justify total dedication. By adding servers to a network, other nodes on the network can be dedicated to applications processing.

Digital has a substantial amount of software available that can be used to provide server functions in the network. Print server, file server, terminal server, and database server capabilities are available by using existing Digital software on general-purpose computers.

Users can build servers by providing their own application software. For example, a computer node providing typesetting services might be viewed as an application server. A VAX 8700 that is connected to a local area network and is running the VMS operating system might be viewed as a computer server, while a VAX 8250 with a laser printer might be viewed as a print server. The following list illustrates server software alternatives.

Server Software Alternatives

- General-Purpose Servers
  - Print Server/File Server (for example, VMS host)
  - Database Access (for example, DATATRIEVE host)
- Packaged/Special-Purpose Servers
  - Terminal Server
  - Router
  - Gateway
  - PC LAN Server
  - DEMPR
- Application Server — User-developed

IEEE 802.3/Ethernet Communications Servers

IEEE 802.3/Ethernet communications servers are dedicated, special purpose units that provide resource sharing within a local area network (LAN). Three types of communications servers are available for use on an 802.3/Ethernet local area network: terminal servers, router servers, and gateways.

The following figure illustrates the use of communications servers on a local area network.

Fiber Optic Ethernet LAN

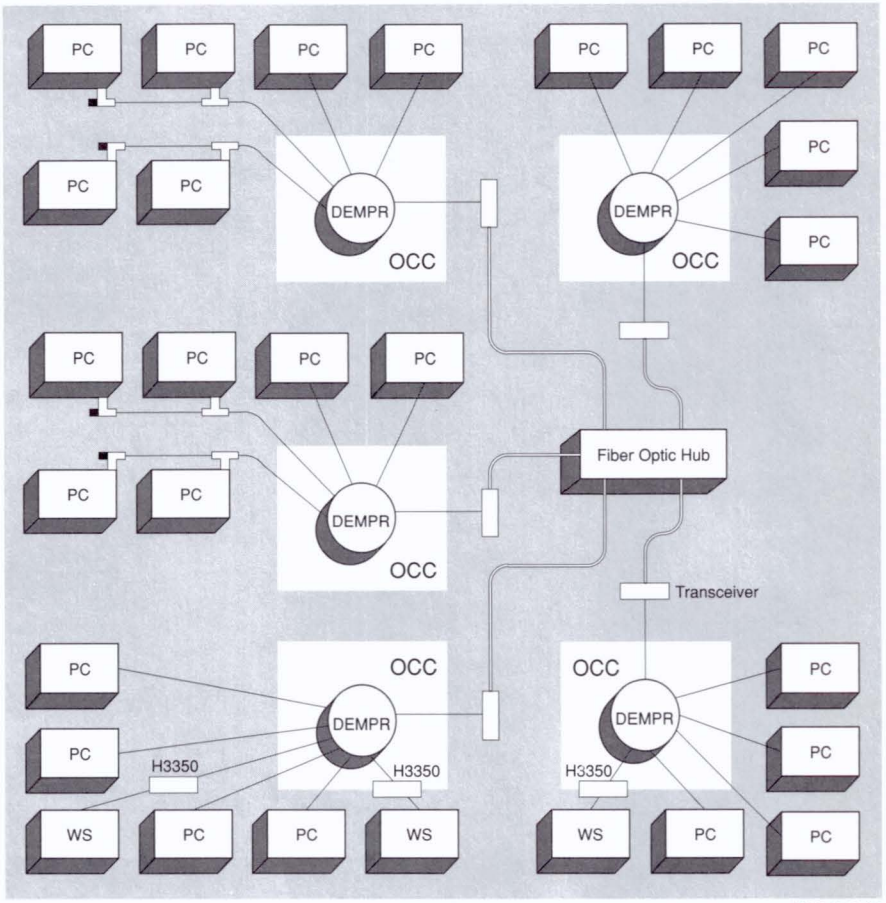

TBG-016-00

Extended Local Area Networks

The LAN Bridge 150/200 connect IEEE 802.3/Ethernet networks using a variety of media to create an extended LAN. The maximum 802.3/Ethernet distance limit is 2.8 km (1.7 miles) between any two nodes: An extended LAN lengthens this distance without degrading the 802.3/Ethernet 10 Mb/s throughput. Using fiber optic cable, the extended LAN can span distances in excess of 60 km (37.3 miles); using microwave links, it can span distances up to 35.6 km (22.1 miles). An extended LAN may consist of up to 8,000 intelligent devices

The LAN Bridge 150/200 dynamically manages data traffic flow between LANs, selectively forwarding packets to keep traffic local and to reduce traffic over the entire network. Baseband-to-baseband, broadband-to-broadband, and baseband-to-broadband network configurations are possible using the bridge as a link.

The following figure illustrates an extended LAN configuration using the LAN bridge.

Baseband/Broadband 802.3/Ethernet LAN Configuration with LAN Bridge

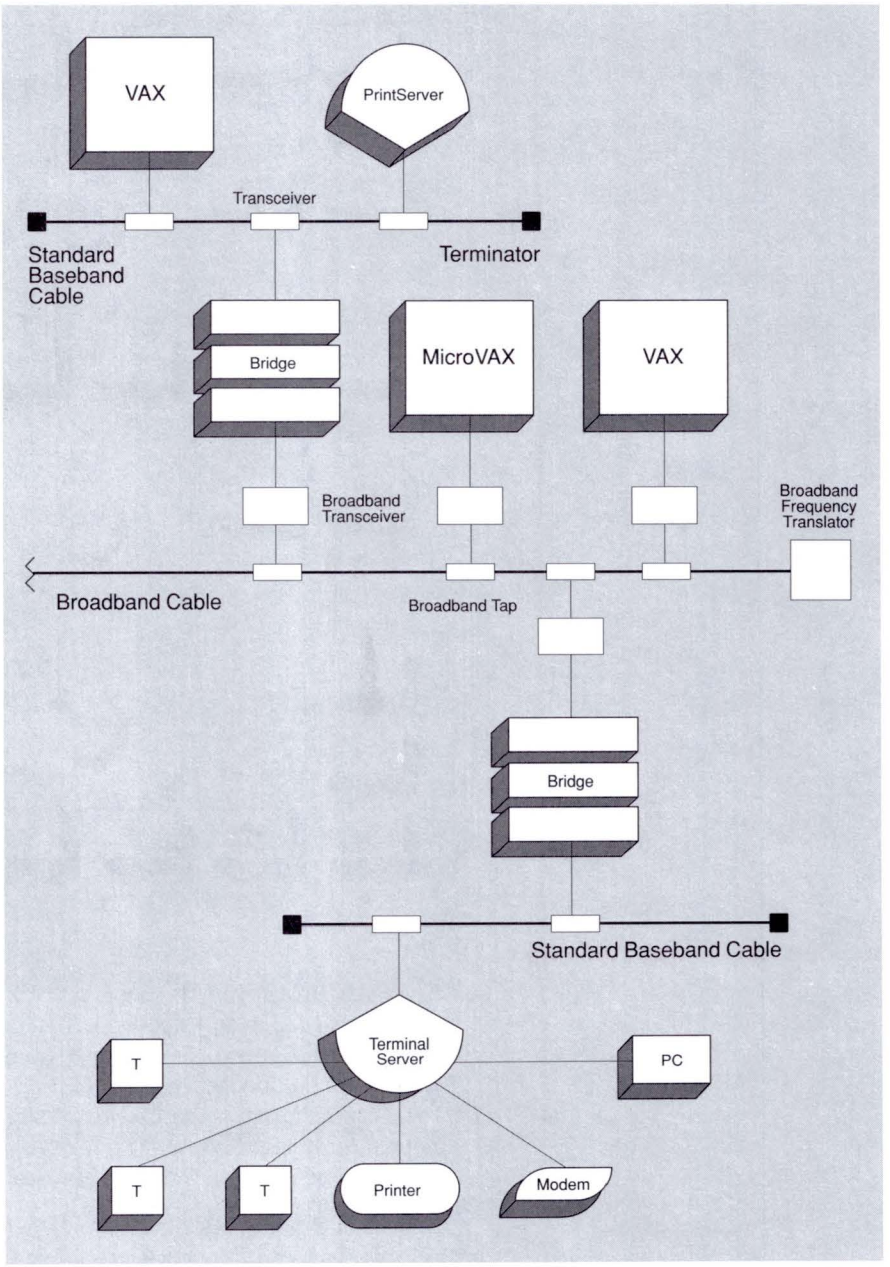

TBG-017-00

Network Security

Designed to protect network security, the Ethernet Enhanced Security System comprises two products integrated into standard 802.3/Ethernet environments:

- Digital's Ethernet Secure Network Controller (DESNC)
- VAX Key Distribution Center (KDC), a layered software product to manage the DESNC

This security system selectively encrypts information across a network, without affecting other network nodes not requiring encryption.

▲ Refer to Section 7, "Network Security," for more information.

802.3/Ethernet Advantages

Digital's range of 802.3/Ethernet products has been developed to solve a number of problems typically encountered in business and industry.

- Simplified network design — 802.3/Ethernet architecture and design rules are streamlined and uncomplicated because the cable, transceivers, and controllers meet the IEEE 802.3 and/or Ethernet specifications. (▲ Refer to Appendix A, "802.3/Ethernet Configuration Guidelines," for specific design rules.)
- Simplified installation — 802.3/Ethernet can be brought up one node at a time. A newly installed node can communicate immediately with all other active nodes on the network, without disrupting other nodes or networks.
- Simplified cabling — Replaces multiple host-to-station cables.
- Flexibility for future growth — Additional devices and cable segments can be connected without shutting down the network.
- Reliability:
  - The absence of master/slave node relationships and the need for routing nodes eliminates most single-points of failure.
  - Extensive diagnostics minimize the time needed to locate and to repair a failure.
  - The 802.3/Ethernet transceiver is designed with triple-redundant circuitry to prevent a single-failure from disabling the network.
  - 802.3/Ethernet is very reliable because of adherence to rigid standards on concentricity and passive nature.
- High-speed communications — 802.3/Ethernet provides high-speed (10 Mb/s) links between all network nodes.
- Shared databases — The 802.3/Ethernet network coupled with DECnet software provides rapid access to large amounts of data in remote locations. Files and databases can be shared.
- Shared resources — 802.3/Ethernet allows special purpose peripherals such as high-speed printers, very large disks, and high-resolution graphics packages to be shared by multiple users.
- Connection of diverse equipment — Digital Network Architecture (DNA) allows the exchange of data, files, commands, and diagnostic information among a large variety and range of Digital products. In addition, it is possible to connect to other vendors' equipment at the 802.3/Ethernet Data Link level or through X.25 and SNA Gateways.

Office Applications

The following figure depicts a business office in which terminals are available for accounting, order taking, order processing, inventory control, word processing, and so on. Two supervisory stations have access to all data. A manager with a DECstation PC can monitor accounts, display graphic data (pie charts, bar graphs, etc.), and issue instructions to any department. The DECstation is connected to a segment of ThinWire cable that allows up to 29 additional devices to be added as the company grows.

Standard 802.3/Ethernet baseband cable extends from the office area to other major sources of information, including shipping, receiving, inventory, and the shop floor. Work can be monitored from the receipt of parts, through shipping, to receipt of payment. A bank of modems attached to a terminal server permits remote offices or sales representatives with small portable terminals to call in orders or check a particular account at any time.

Baseband 802.3/Ethernet Office Application

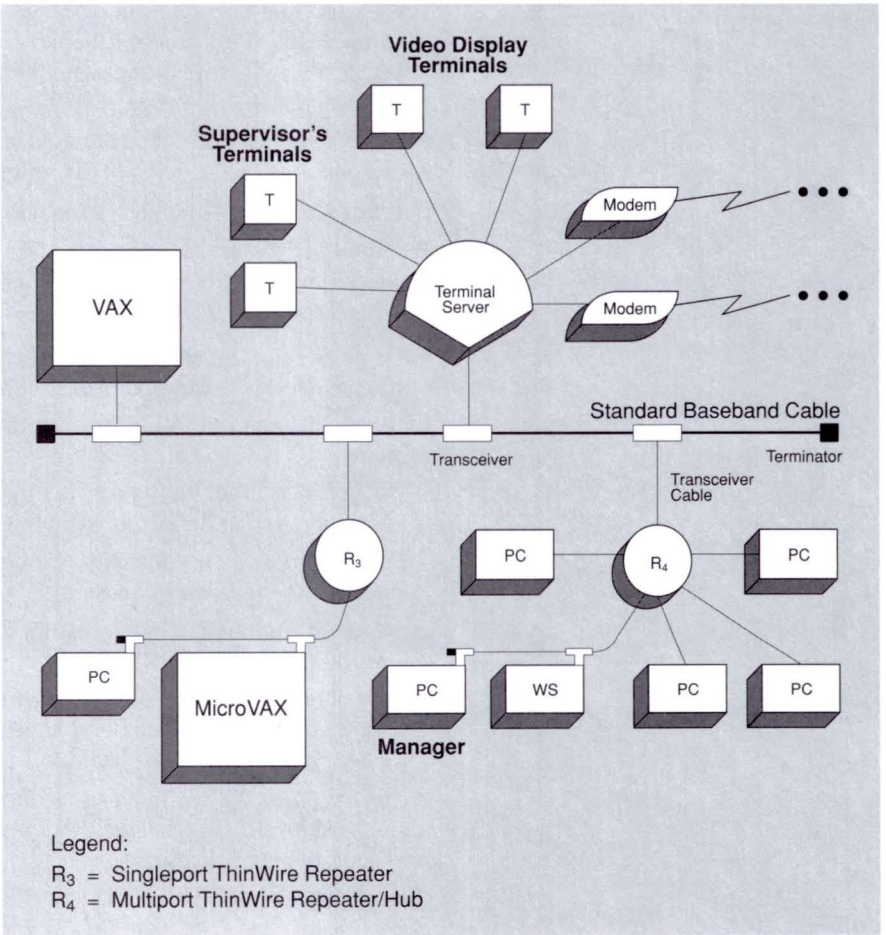

TBG-020-00

Factory Applications

The following figure illustrates a typical application in a factory, which controls automatic assembly/test devices. Data entry stations provide timely information on the entire manufacturing process. Exchange of data between the manufacturing site and the rest of the corporation is handled through a router server.

Baseband 802.3/Ethernet Factory Application

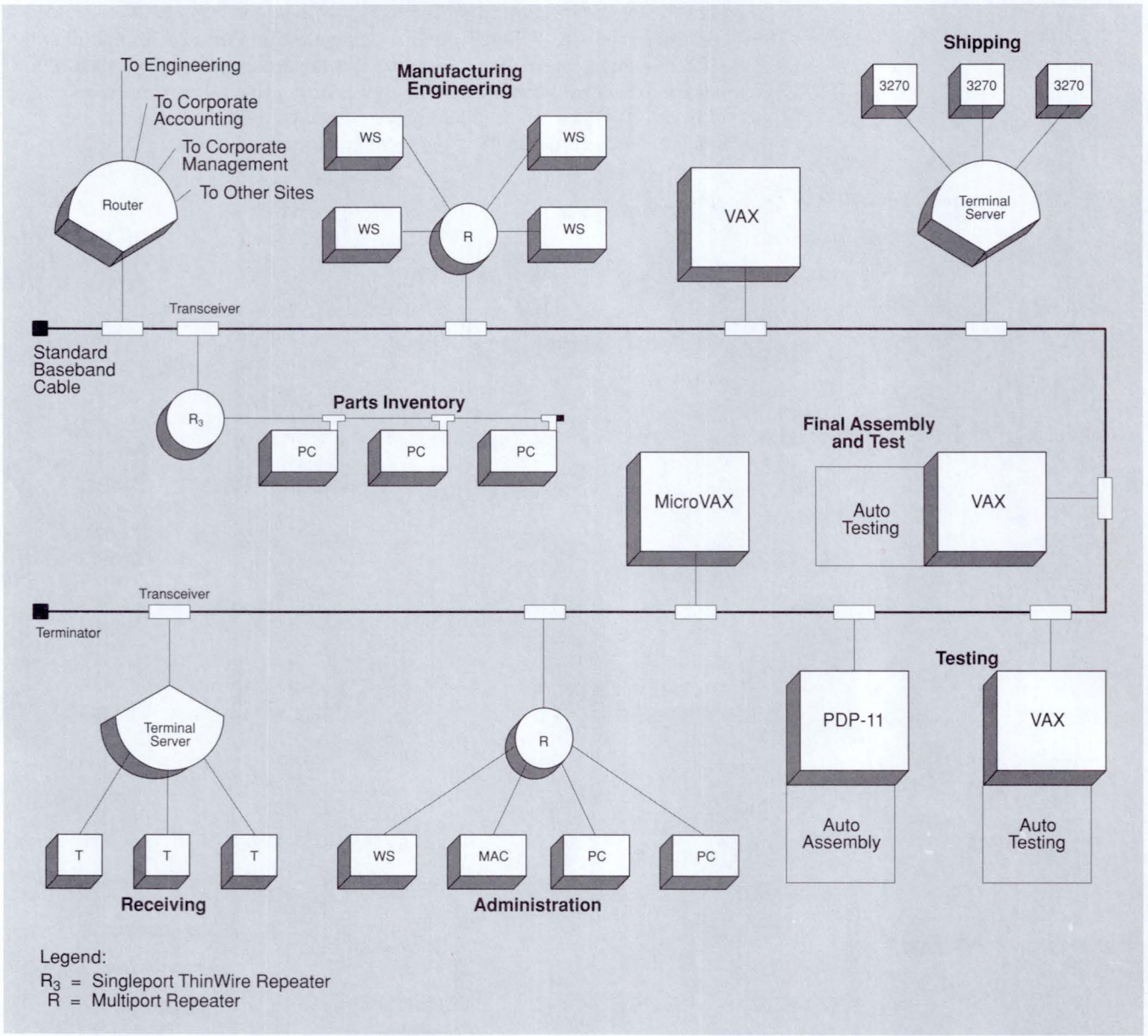

TBG-021-00

CAD/CAM Applications

The 802.3/Ethernet 10 Mb/s throughput handles everything from word processing to bitmap graphics. A fully integrated 802.3/Ethernet design/manufacturing network permits smooth integration of design, automated manufacturing inventory, and business functions.

The following figure depicts an engineering department using 802.3/Ethernet to connect a number of workstations to CAD/CAM hosts. A fiber optic hub provides the interconnection from fiber optic cabling to a segment of unshielded twisted-pair cables (for 10BaseT), and a segment of ThinWire cables that provide cost-effective, high-speed communications. As the department grows, over 200 stations can be added without changing this basic configuration. A terminal server is used for the low-speed terminal communications. Note that a bridge isolates local engineering traffic from local administrative traffic.

Baseband 802.3/Ethernet CAD/CAM Application

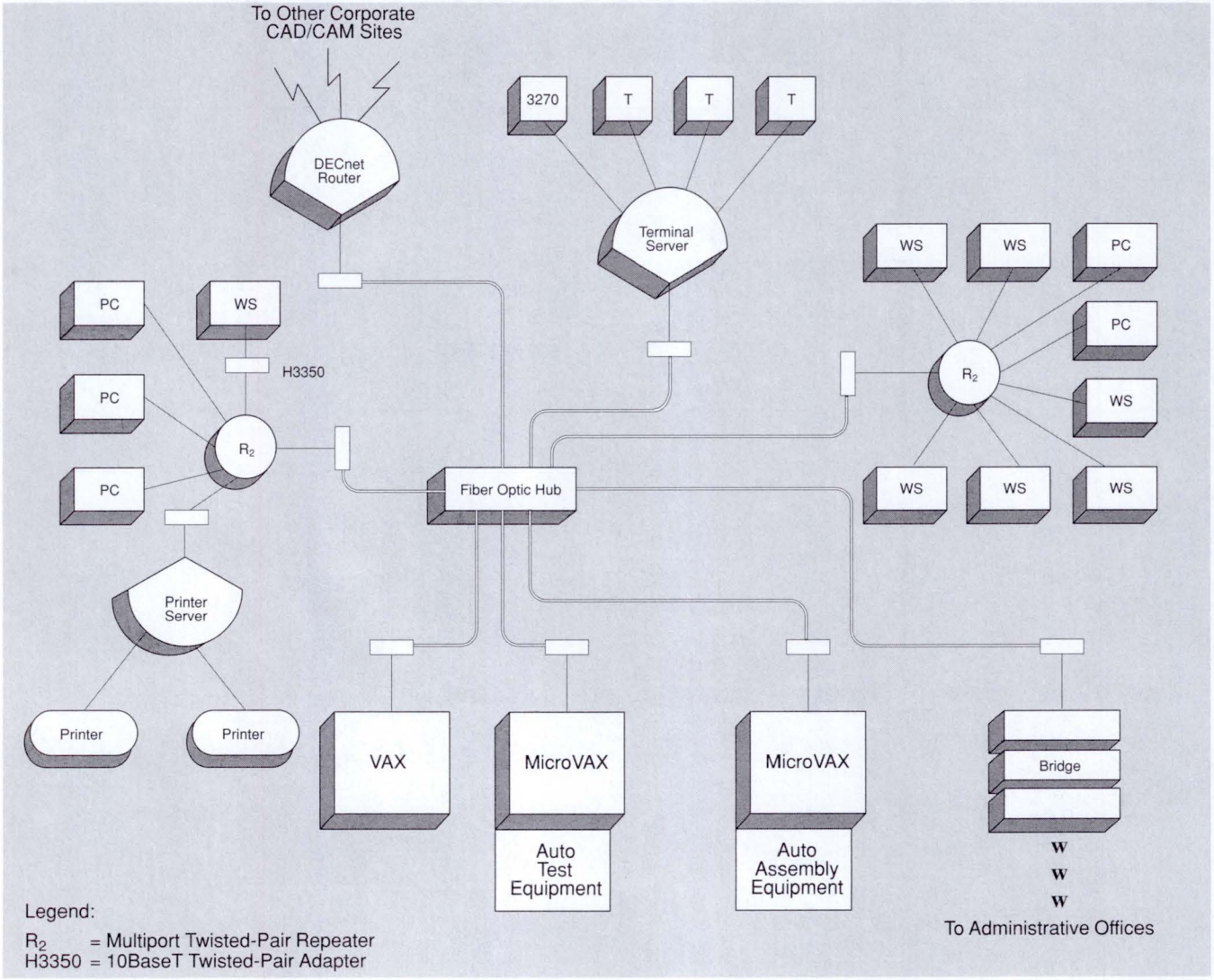

TBG-022-00

Hospital Applications

Connection of testing and laboratory computers to a hospital's central computer and to a number of remote monitoring stations requires a high-speed network. With the 802.3/Ethernet high data-transfer rate, even remote access to full-color bitmaps, such as CAT scans, is practical.

Hospital accounting and legal departments use automated patient records to perform their jobs. The local area network provides a fast, accurate means of accessing information critical to billing patient accounts and storing the details of patient treatment procedures.

The following figure depicts an 802.3/Ethernet network on which critical data is available at the nurses' station and in the offices of various department heads. The system can provide detailed medical information on any given patient, as well as comparisons to similar cases and to the accepted norms. Note that DECstations on the operating room segment are connected to ThinWire cable that provides configuration flexibility.

The figure also shows a terminal server with modems and leased phone lines connecting the offices of resident doctors. A physician can monitor test results or the current conditions of patients from the office. Note that a bridge isolates local traffic on this segment from local traffic on the other two segments.

Baseband 802.3/Ethernet Hospital Application

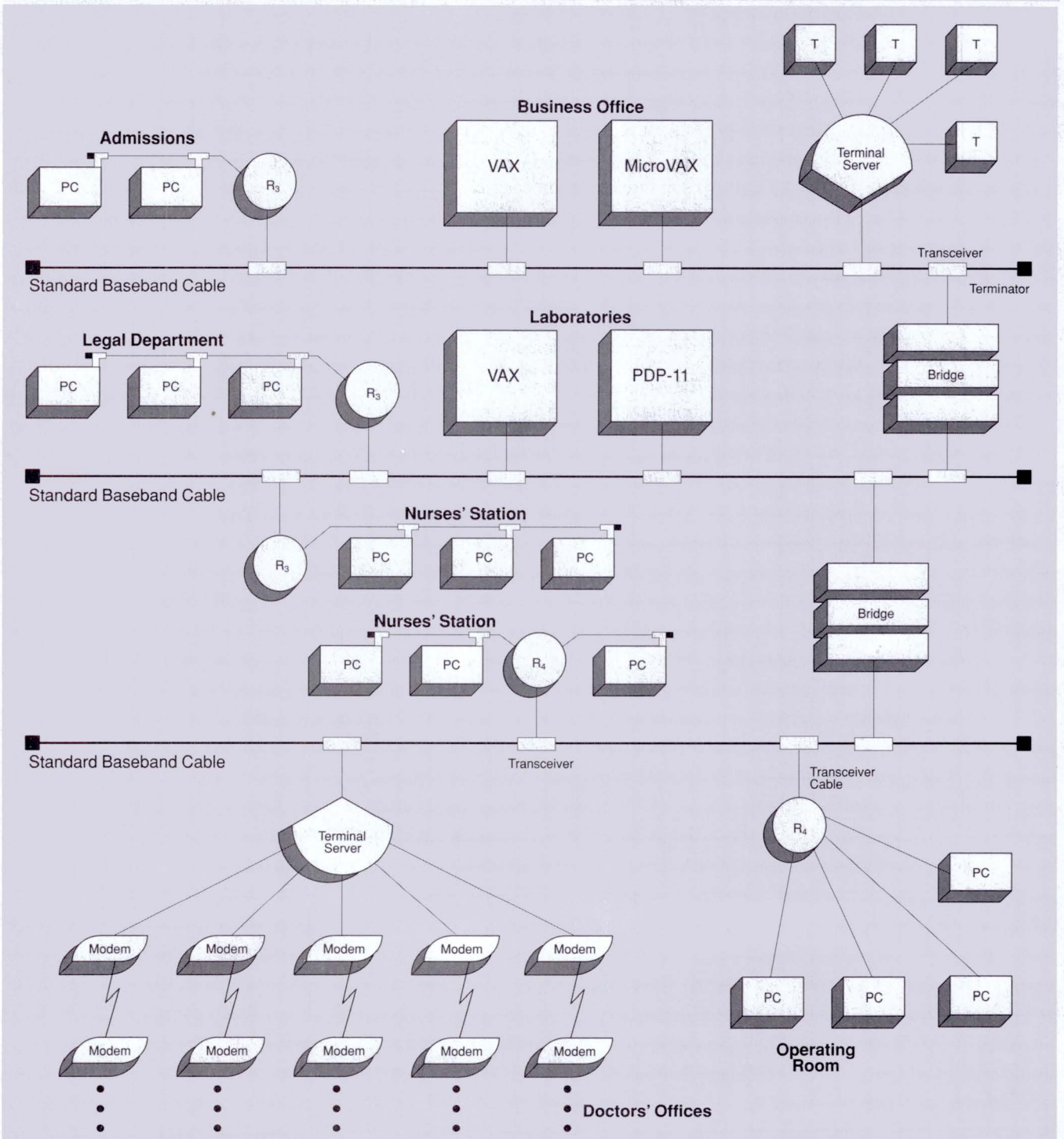

Legend:
R_3 = Singleport ThinWire Repeater
R_4 = Multiport ThinWire Repeater/Hub

TBG-023-00

Laboratory Applications

Within a laboratory environment, monitoring test conditions and results is extremely important. By networking a test control computer to a computer acting as a monitoring station and to a central database on another computer, current test conditions can be displayed along with previous or standard conditions. Deviations from the desired conditions become apparent and can be corrected before continuing with the test. Each MicroVAX computer is connected to a baseband coaxial cable. The 10BaseT transceiver provides the connection to unshielded twisted-pair cabling through a multiport repeater hub providing a cost-effective link to the devices.

The following figure illustrates how various laboratory computers and other resources are typically connected by an 802.3/Ethernet local area network.

Baseband 802.3/Ethernet Laboratory Application

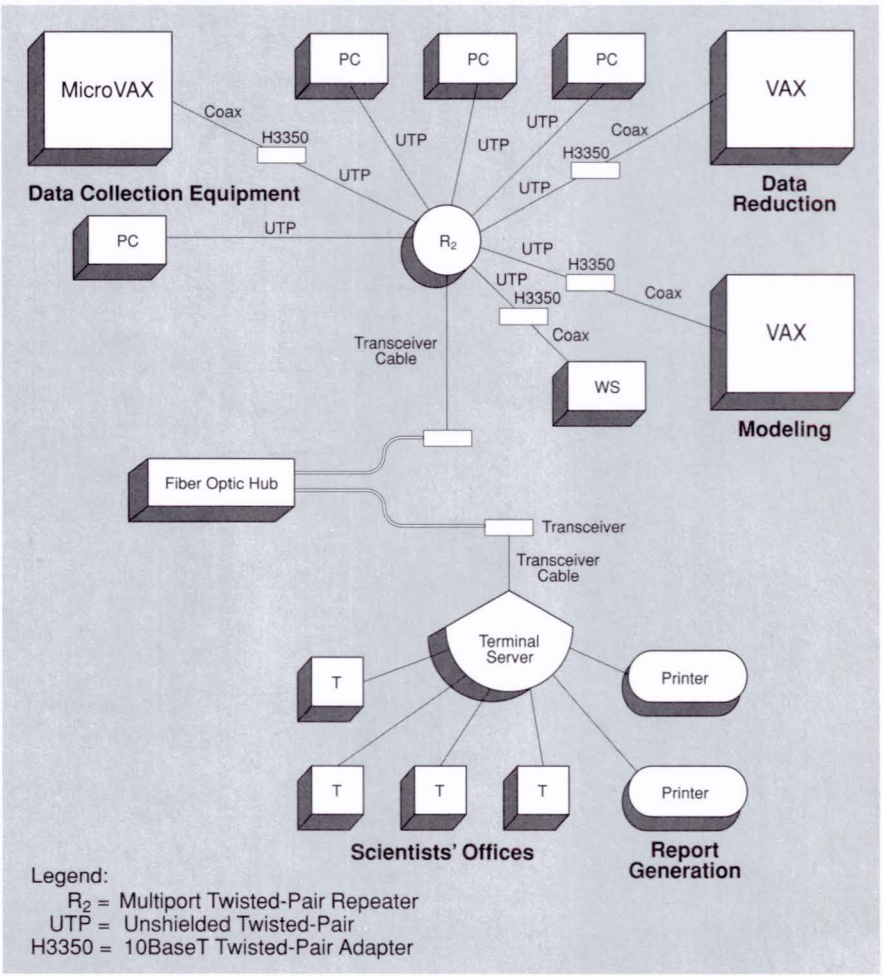

TBG-024-00

University Applications

The application of computers in a university system can cover everything from maintaining student accounts and academic records to using computers as classroom tools.

The following figure illustrates an 802.3/Ethernet application used at a university. Note that bridges isolate local traffic throughout the university.

Fiber optic cable is recommended for connecting detached buildings. The METROWAVE bridge (microwave-based) is used as an alternative for physical or economic reasons.

Baseband 802.3/Ethernet University Application

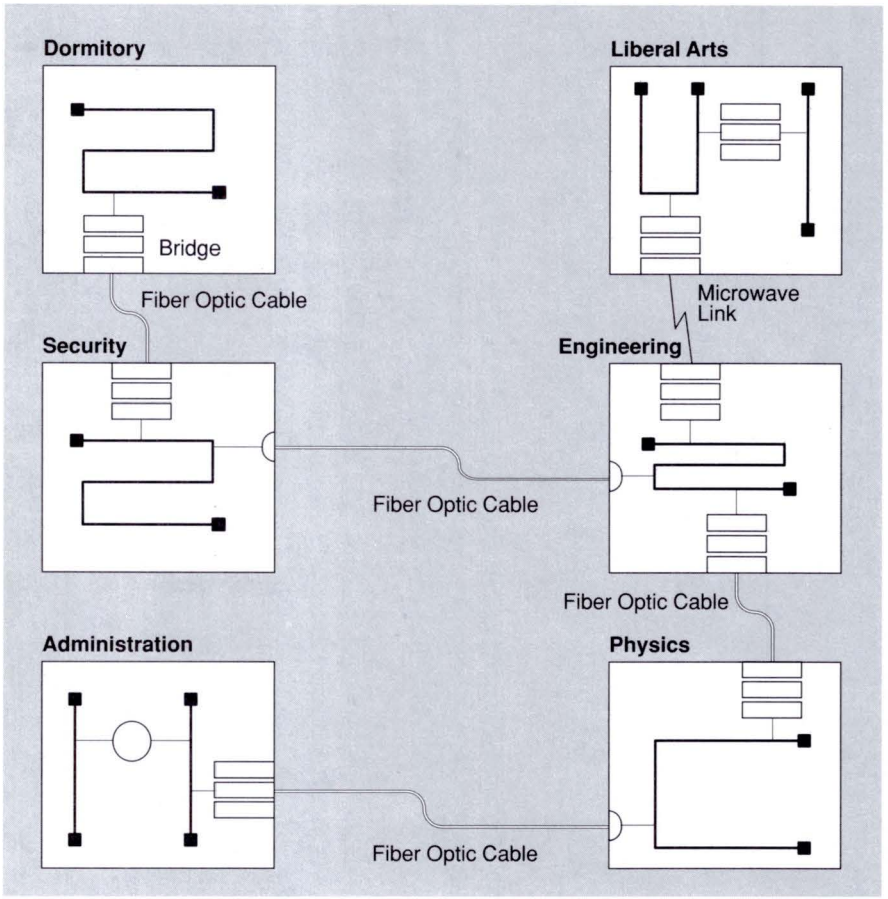

TBG-025-00

Digital has dedicated a complete set of products to address local area networking needs. 802.3/Ethernet networks have been developed specifically for the kinds of communications and resource sharing that take place in a local work environment.

Digital's local area network (LAN) connects 802.3/Ethernet devices in a small geographic area. Every device attached to the LAN has access to all network resources. The network becomes the system.

Hardware products combine to create a physical channel over which the DECnet and 802.3/Ethernet protocols are implemented.

802.3/Ethernet Products

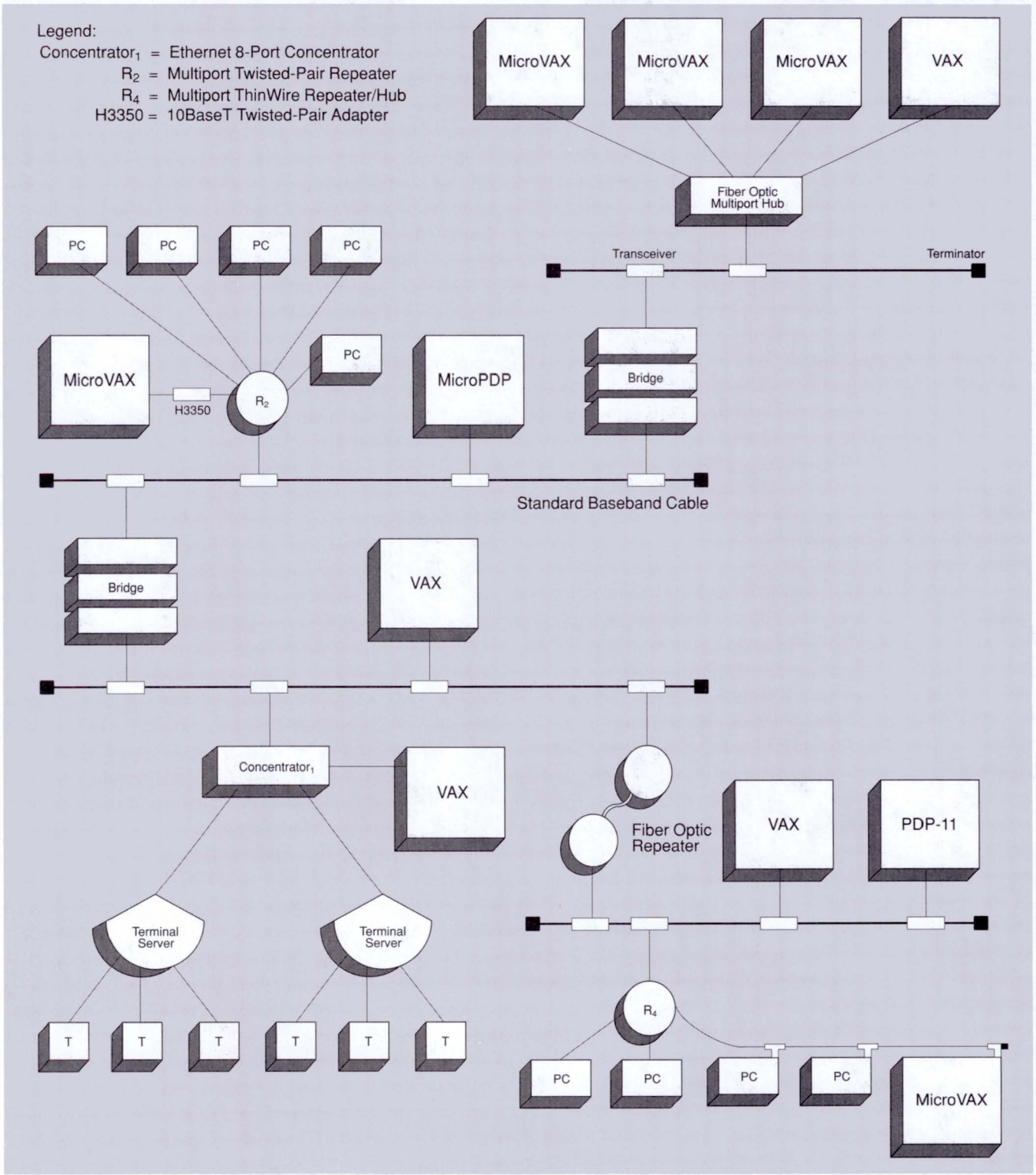

TBG-026-00

Baseband IEEE 802.3/Ethernet Transceiver (H4005)



The H4005 is a nonintrusive tapping transceiver that provides a physical and electrical connection to a standard 802.3/Ethernet cable. The H4005 connects to the standard baseband cable via a removable tap assembly. This product is IEEE 802.3 compatible and can interface to both 802.3 and Ethernet station controllers. The H4005 contains the necessary electronics to send and receive signals at 10 Mb/s, detect the occurrence of collisions, and provide electrical isolation between the cable and the station.

Compatibility

The H4005 is compatible with all products except the DEREP, which requires the H4000 transceiver to connect to the standard 802.3/Ethernet cable.

Features

- IEEE 802.3 and Ethernet compatibility allows for flexible network configuring.
- The transceiver clamps onto the standard baseband cable without cutting it, allowing the unit to be installed, repaired, or removed without interrupting network operation.
- Simple installation- and replacement-procedures allow quick and easy network reconfiguration. Network devices can be added to or be removed from the network easily.
- Redundant protective circuitry, high noise immunity, and internal self-test make the H4005 a highly reliable physical channel, reducing maintenance cost.
- Heartbeat is enabled or disabled by a switch accessible from outside the unit.
- The continuous message loopback feature simplifies and speeds fault isolation, reducing maintenance time and cost.
- The UL-approved, rugged, insulated housing allows the H4005 to be installed in environmental airspace without conduits.

Installation in Environmental Airspace

Commercial buildings commonly have drop ceilings. The space between the drop ceiling and the floor above is called environmental airspace. Environmental airspace is often used for return air for heating and air conditioning systems (called return airspace) and to run wiring, such as coaxial cable. Equipment in return airspace can be a potential fire hazard because often there is no barrier to contain fire or smoke. Therefore, equipment that is not approved by Underwriters Laboratory must be placed in a conduit when installing it in return airspace.

Digital's plenum-rated cable and the H4005 are approved by the Underwriters Laboratory (UL) and National Electric Code (NEC) for use in environmental airspace without a conduit. (Canada, Europe, and GIA requirements may differ from those of the NEC). However, local and state regulations always take precedence over UL approval.

Specification	
Physical Characteristicss	
Length	8.7 cm (3 in)
Width	9.8 cm (4 in)
Height	3.7 cm (1.5 in)
Weight	0.284 kg (10 oz)
Power Requirements	
Voltage required at transceiver	15.75 V at maximum distribution impedance of less than 4 ohms
Maximum current	0.5 A
Environmental Class	C (Refer to Appendix C for details.)

Ordering Information

Installation of the H4005 transceiver by the customer requires the Transceiver Installation toolkit, which includes all the components necessary to install the H4005.

H4005 Order Codes	
Option	**Order Code**
802.3/Ethernet Transceiver	H4005
Transceiver Installation Tool Kit	12-24664-02

Local Network Interconnect (DELNI)

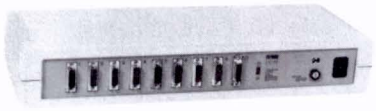

The Local Network Interconnect (DELNI) is a low-cost, tabletop device with its own power supply. It is a concentrator that allows up to eight Ethernet-compatible devices (not terminals) to be grouped together. Device performance remains constant whether a device is connected to the local area network through a transceiver or a DELNI.

The DELNI can be configured three ways: standalone, hierarchical standalone, and connected. A switch on the DELNI allows selection of either standalone- or connected-mode of operation.

The figure "DELNI Standalone Configuration" illustrates the standalone configuration that supports up to eight systems using standard transceiver cables.

The figure "DELNI Hierarchical Standalone Configuration" illustrates the hierarchical standalone configuration that supports a combination of DELNIs and devices using standard transceiver cables. Hierarchical standalone configurations are not connected to standard baseband cable.

The figure "DELNI Connected Configuration" illustrates connected configurations that support up to eight devices using transceiver cable. These configurations are connected to standard baseband cable via transceivers and transceiver cable. ▲ Refer to Appendix A, "802.3/Ethernet Configuration Guidelines," for specific distance requirements.

The DELNI can also be used in ThinWire configurations to concentrate up to eight ThinWire repeaters. ▲ Refer to "ThinWire 802.3/Ethernet Products" in this section for more information.

Features

- A connected DELNI LAN reduces the cost of multiple connections to standard baseband cable. It also allows more than 100 devices to be connected to a single 500 meter (1,640 foot) coaxial cable segment.
- The standalone and hierarchical standalone DELNI LAN configurations eliminate the need for standard baseband cable and transceivers in very small networks.
- Transceiver cable wiring to a centrally located DELNI offers wiring configuration flexibility.
- The DELNI can be installed by customers, reducing installation cost.
- A standalone/connected mode switch allows a user to change from the connected configuration to the standalone configuration. This allows for the temporary isolation of traffic in the DELNI subnet for security or for performance testing.

DELNI Standalone Configuration

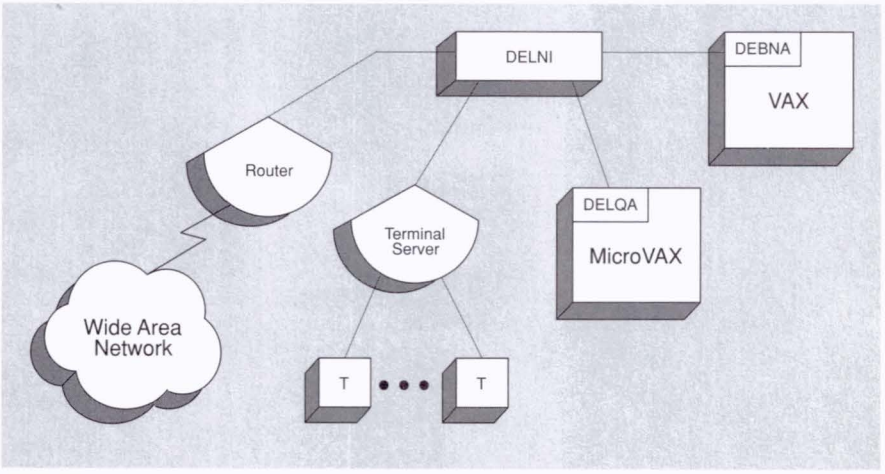

TBG-157-00

DELNI Hierarchical Standalone Configuration

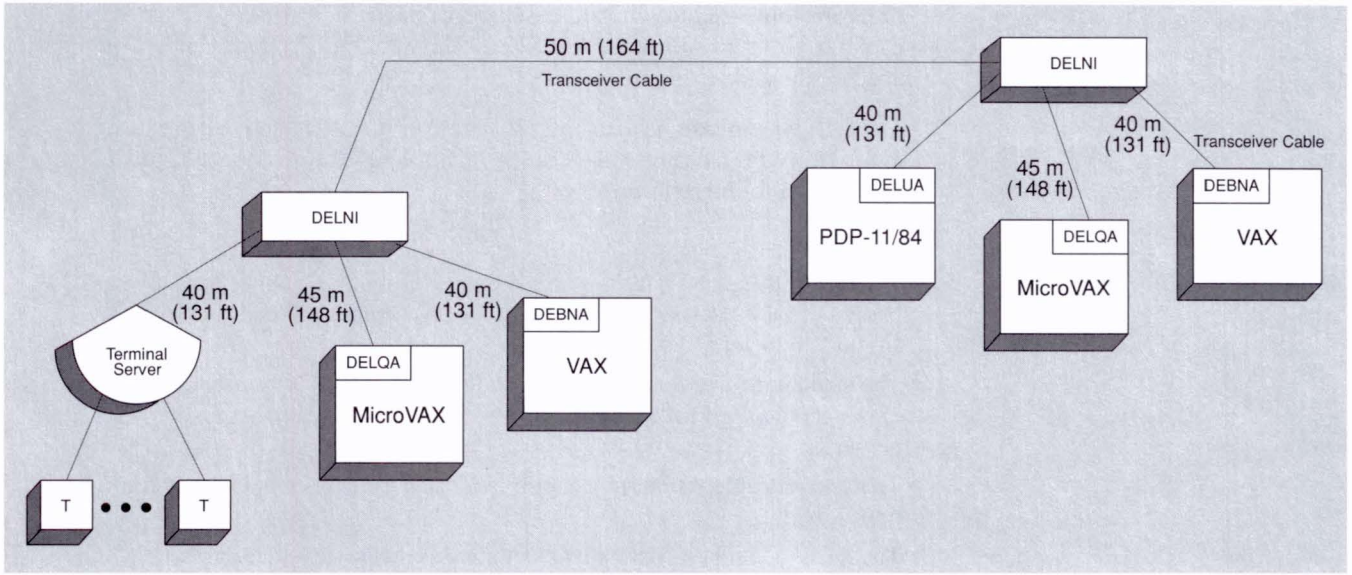

TBG-027–00

DELNI Connected Configuration

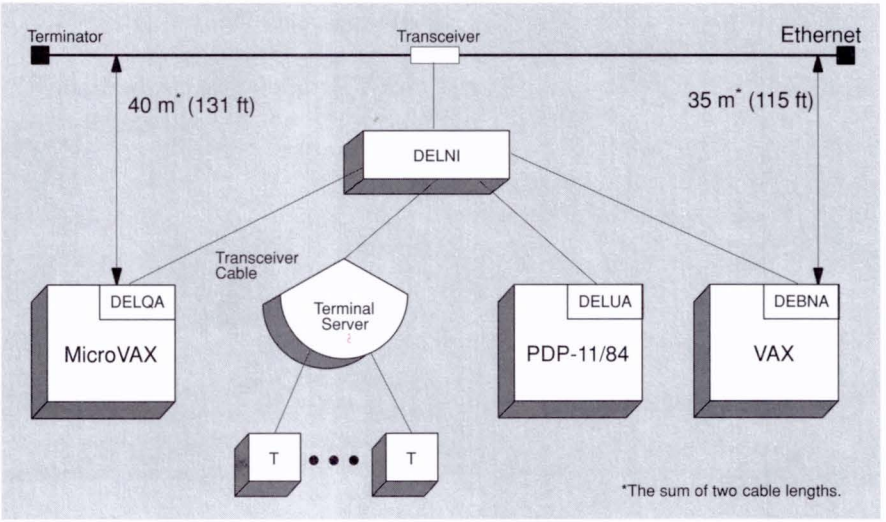

TBG-028-00

Specifications	
Physical Characteristics	
Length (rackmount)	44.5 cm (17.5 in)
Length (with cover)	48.9 cm (19.25 in)
Width (rackmount)	17.8 cm (7.0 in)
Width (with cover)	19.7 cm (7.75 in)
Height (rackmount)	6.4 cm (2.5 in)
Height (with cover)	8.9 cm (3.5 in)
Weight	6.4 kg (14.0 lb)
Power Requirements	
Switch-selectable	120 V or 240 V, 47 to 63 Hz
ac watts drawn	26 W
Inrush current	1 A at 120 V; 0.5 A at 240 V
Surge currents	2 A for 5 cycles at 120 V 1 A for 5 cycles at 240 V
Environmental Class	C (Refer to Appendix C for details.)

Ordering Information

Order the DELNI and, if required, a country kit.

Each node connected to a DELNI requires an 802.3/Ethernet communications controller and transceiver cable. DELNI-connected configurations require a transceiver and transceiver cable.

Non-U.S. versions of the DELNI require a country kit. (The U.S. version does not require a country kit.) Each kit contains installation instructions and a power cord. For countries not listed, select a country kit that uses the same plug configuration.

DELNI Order Codes	
Option	**Order Code**
Local Network Interconnect (DELNI), allows up to eight network devices to be grouped together	
Local Network Interconnect, 110–120 Vac	DELNI-BA
Local Network Interconnect, 220–240 Vac	DELNI-BB
DELNI Country Kits	DELNK-A*
* Replace the * with one of the following codes: B (Belgium), C (Canada – French), D (Denmark), E (United Kingdom), F (Finland), G (Germany), H (Holland), I (Italy), K (Switzerland – French), L (Switzerland – German). M (Sweden), N (Norway), P (France), Q (Canada – English), S (Spain), Z (Australia)	

Standard Baseband 802.3/Ethernet Cable



Standard baseband 802.3/Ethernet cable is the main transmission medium of a baseband network. The cable is available in four lengths (sections), which can be joined using barrel connectors to create segments up to 500 meters (1,640 feet) long. Local area networks can be extended beyond 500 meters by adding repeaters. ▲ Refer to Appendix A, "802.3/Ethernet Configuration Guidelines," for more detailed information.

Features

- Standard baseband 802.3/Ethernet cable segments are premarked for transceiver placement at 2.5-meter (8.2-foot) intervals, providing easy installation.
- Plenum-rated coaxial cable is approved by the Underwriters' Laboratory (UL) for safe use in environmental air spaces without a conduit.
- PVC-insulated coaxial cable offers a low-cost alternative to plenum-rated coaxial cable. PVC-insulated coaxial cable can be used in an open space, such as an office, laboratory, or manufacturing facility. PVC-insulated coaxial cable is not acceptable for use in environmental airspace that is used for return airflow because it produces toxic fumes if it burns.
- High-immunity to electrical noise allows the coaxial cable to be used in a variety of environments.
- Preinstalled connectors on coaxial cable ends make terminators and barrel connectors easy to install.

Standard Baseband Cable Order Codes

Option	Order Code
Plenum-Rated Coaxial Cable	
23.4 m (76.8 ft)	BNE2A-MA
70.2 m (230.3 ft)	BNE2A-MB
117.0 m (383.9 ft)	BNE2A-MC
500.0 m (1,640 ft)	BNE2A-ME
PVC Coaxial Cable	
23.4 m (76.8 ft)	BNE2B-MA
70.2 m (230.3 ft)	BNE2B-MB
117.0 m (383.9 ft)	BNE2B-MC
500.0 m (1,640 ft)	BNE2B-ME

Fiber Optic Cable



Digital supports fiber optic cable in bulk through third-party vendors for all fiber optic network products (such as FDDI, bridges, repeaters, OPEN DECconnect, and 802.3/Ethernet backbone products). Digital recommends the use of 62.5/125 micron multimode optical fiber for connecting all its fiber optic network products. This optical fiber type is approved by the ANSI X3T9.5 committee as the recommended fiber type for FDDI applications. In addition, the EIA/TIA 568 standard not only advises fiber optic cabling in the backbone, but has been proposed as an option for the horizontal.

The optical fiber specified for use in all cable constructions must be 62.5-micron core and 125-micron cladding, dual-window, graded-index profile, multimode glass-on-glass construction (EIA Class 1a).

Optical Characteristics	
Attenuation	2.8 to 3.5 dB/km at 850 nm 0.8 to 1.5 dB/km at 1,300 nm
Bandwidth	Greater than 160 MHz/km at 850 nm Greater than 500 MHz/km at 1,300 nm
Numeric aperture	0.275 $\pm$ 0.015 at 850 nm
Recommended multimode connector type	ST-style

Fiber Optic Connectors

The ST-style connector is recommended for termination of multimode fiber within the OPEN DECconnect cable plant since it has higher-quality and lower losses than the traditional SMA-type. ST-to-ST patch cable assembly is required when connecting current fiber optic LAN Bridge 150 (DEBET) and fiber optic repeaters DECrepeater 200 (DEREN-RP/RQ only) to ST-based cable plants. Future Digital fiber optic network products will utilize an ST-type connector.

Transceiver Cable

A transceiver cable connects an 802.3/Ethernet transceiver or a Local Network Interconnect (DELNI) to an 802.3/Ethernet communications controller, broadband transceiver, or LAN Bridge 150. The cable is compatible with Ethernet and IEEE 802.3 networking products and consists of four twisted-pair wires enclosed in a shield and jacket of either plenum-rated or PVC (polyvinyl chloride). Plenum-rated cable is more expensive than PVC-insulated cable, but it can be used in environmental airspaces without an expensive conduit. PVC-insulated cable can be used in an open space such as an office, laboratory, or manufacturing facility. PVC-insulated cable is not acceptable for use in environmental airspace because it produces toxic fumes if it burns.

Transceiver cable is available in several lengths (sections). Sections can be connected with built-in slide latches to form a single continuous link up to 50 meters (164 feet) long. The connection point for a transceiver cable section can be secured to a wall and hidden with the use of an Etherjack. Each transceiver cable has either a straight or right-angled 15-pin connector on both ends.

For standard 802.3/Ethernet baseband networks, use BNE3H-, K-, L-, or M-series cable.

Office Transceiver Cable



The office transceiver cable performs the same function as the transceiver cable but is smaller in diameter and more flexible. The office transceiver cable can be used in an open area (office, laboratory, or manufacturing area) instead of the heavier transceiver cable.

The office transceiver cable is available only with PVC insulation. It should not be connected to a standard baseband transceiver if the transceiver is located in environmental airspace. PVC-insulated cable is not acceptable in environmental airspace because it produces toxic fumes if it burns.

Office transceiver cable is available in two lengths (sections). Each office transceiver cable has either a straight or right-angled 15-pin connector on both ends. The connection of an office transceiver cable to a standard transceiver cable is simplified because both use the same connectors. The connection point can be secured to the wall base and hidden with the use of an Etherjack.

The office transceiver cable attenuation is greater than that of the PVC-insulated or plenum-rated transceiver cable by a factor of four (for example, 2 meters [6.6 feet] of office transceiver cable is electrically equivalent to 8 meters [26.2 feet] of standard transceiver cable). Because office transceiver cables are not as long as standard transceiver cables, the distance between devices connected by office transceiver cables is less than the distance between connected standard transceiver cables.

For standard 802.3/Ethernet baseband networks, use BNE4C- or D-series cable.

Transceiver Cable and Office Transceiver Cable Order Codes	
Option	**Order Code**
Transceiver cable with PVC insulation, straight connectors	**Standard 802.3/Ethernet**
5.0 m (16.4 ft)	BNE3H-05
10.0 m (32.8 ft)	BNE3H-10
20.0 m (65.6 ft)	BNE3H-20
40.0 m (131.2 ft)	BNE3H-40
Transceiver cable with PVC insulation, right-angle connectors	
5.0 m (16.4 ft)	BNE3K-05
10.0 m (32.8 ft)	BNE3K-10
20.0 m (65.6 ft)	BNE3K-20
40.0 m (131.2 ft)	BNE3K-40
Transceiver cable, plenum-rated with straight connectors	
5.0 m (16.4 ft)	BNE3L-05
10.0 m (32.8 ft)	BNE3L-10
20.0 m (65.6 ft)	BNE3L-20
40.0 m (131.2 ft)	BNE3L-40
Transceiver cable, plenum-rated with right-angle connectors	
5.0 m (16.4 ft)	BNE3M-05
10.0 m (32.8 ft)	BNE3M-10
20.0 m (65.6 ft)	BNE3M-20
40.0 m (131.2 ft)	BNE3M-40
Office transceiver cable with PVC insulation, straight connector	
2.0 m (6.6 ft)	BNE4C-02
5.0 m (16.4 ft)	BNE4C-05
Office transceiver cable with PVC insulation, right-angle connector	
2.0 m (6.6 ft)	BNE4D-02
5.0 m (16.4 ft)	BNE4D-05

▲ For Unshielded Twisted-Pair Ethernet product information, refer to the "802.3/Ethernet Twisted-Pair Products" section.

ThinWire 802.3/Ethernet Cable

ThinWire cable is a thin, flexible, coaxial cable recommended for:

- Small PC LANs
- Where daisy-chaining is desired
- Longer segment/distance requirements than unshielded twisted-pair
- Manufacturing environments (it has lower EMI than unshielded twisted-pair)

Features

- The maximum length of a ThinWire segment is 185 meters (607 feet). A maximum of 30 devices can be connected to a single segment by daisy-chained connections. When a ThinWire Ethernet repeater is used, up to 29 stations can be connected to each segment of ThinWire cable.
- A ThinWire segment consists of sections linked together by BNC T-connectors or by behind-the-wall daisy-chain faceplates. The bottom of the "T" is inserted either into a DESTA, which is then connected to the station, or into an 802.3/Ethernet communications controller that supports a BNC connector. T-connectors must be a minimum of 0.5 meters (1.6 feet) apart.
- The Ethernet limit of 1,023 devices can be configured in a single ThinWire 802.3/Ethernet network.

Baseband Cable Connector and Terminator Product Order Codes

Option	Order Code
PVC cable with connectors and boots	
1.83 m (6 ft)	BC16M-06
4.57 m (15 ft)	BC16M-15
9.14 m (30 ft)	BC16M-30
ThinWire PVC cable 300 m (1,000 ft)	H8243-A
ThinWire plenum-rated cable 300 m (1,000 ft)	H8244-A
Male coaxial connectors and boots	H8222
T-connectors and boots	H8223
Barrel connectors and boots	H8224
Terminators and boots	H8225
Installation kit	H8242

Standard 802.3/Ethernet Cable Connectors and Terminators





Digital sells standard 802.3/Ethernet baseband cable with connectors at each end of the cable. Standard Ethernet cables can be ordered in bulk. End connectors can be purchased later.

End connectors cannot remain open. At each end connector, a barrel connector with another baseband cable or a terminator must be connected.

Barrel Connectors

Barrel connectors are used to directly join two sections of standard baseband cable. The barrel connector threads into the end connectors on the two cable sections.

Terminators

Terminators are used to electrically complete the ends of the standard baseband cable. A terminator must be installed at each end of a standard cable segment that is not connected to another standard cable segment.

802.3/Ethernet Turnaround Connector

The 802.3/Ethernet turnaround connector is a testing device used to verify that a host controller at the user's station or a server controller and its transceiver cable are electrically operational.

The turnaround connector consists of a transceiver installed on a short length of coaxial cable. Both ends of the turnaround-connector coaxial cable are terminated. The turnaround connector is attached to the transceiver cable, which is connected to a host controller or to a server controller. The turnaround connector is used to verify host operation prior to the transceiver cable's actual installation on the baseband cable. The turnaround connector tests the controller and transceiver cable that connect it to the local area network.

DETPR 10BaseT Workgroup Hub

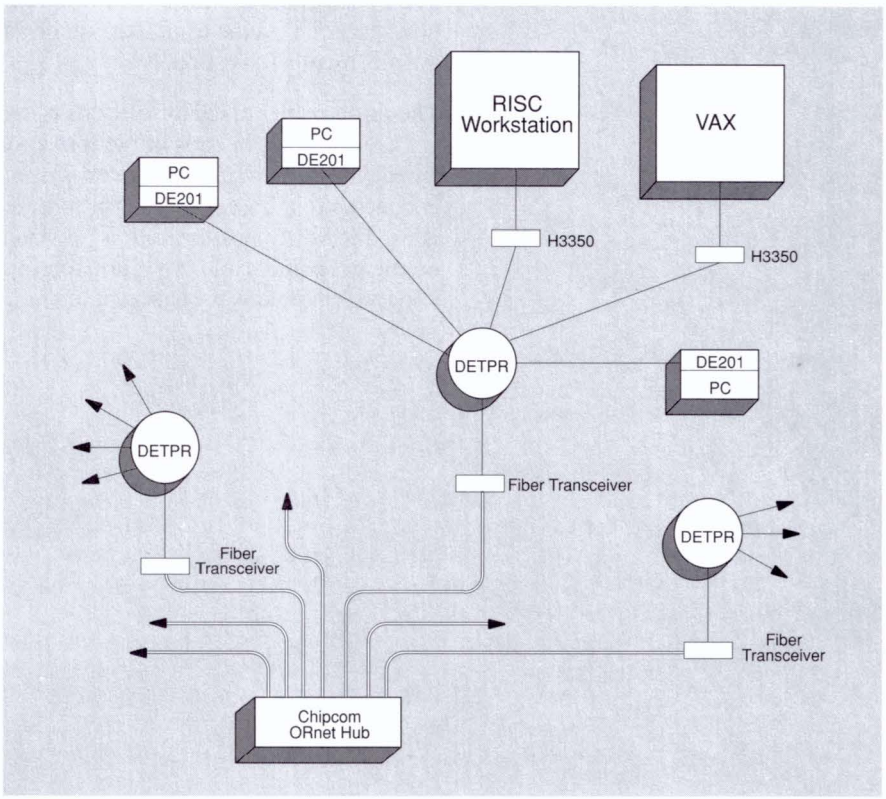

TBG-030-00

Unshielded Twisted-Pair 10BaseT Connectivity

Connectivity to a 10BaseT repeater hub requires home runs to a 10BaseT controller card (DE201) or to a media access device (H3350). The same configuration rules apply to both Digital's 10BaseT product set and to Digital's other IEEE 802.3/Ethernet products. The exceptions are the segment lengths, number of transceivers (MAUs) per segment, and maximum medium delay per segment. The complete IEEE 802.3 10BaseT product set includes the following devices.

Digital's 10BaseT solution is designed for interoperability with 10BaseT compliant vendors:

- 10Base2 (ThinWire coaxial)
- 10Base5 (thick coaxial)
- fiber optic networks

This provides superior investment protection.

To connect 10BaseT products to the OPEN DECconnect wiring system, refer to the "OPEN DECconnect Products" section.

DECrepeater 90T

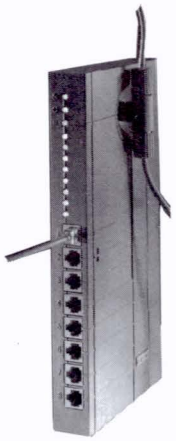

The DECrepeater 90T is a compact 8-port repeater that connects PCs and workstations to a 10BaseT Ethernet LAN. The DECrepeater 90T is part of the WorkGroup Family of Networking Products. It can function as a standalone unit or be snapped into a DEChub 90. ▲ Refer to the DEChub 90 description in this section for more information.

The DECrepeater 90T provides one ThinWire port and eight unshielded twisted-pair ports (using RJ45 modular jacks). Following the recommendation of the IEEE 802.3/Ethernet 10BaseT standard, the transmit/receive crossover occurs in the repeater, not in the cable.

The DECrepeater 90T has the ability to identify malfunctioning ports and automatically segments or restores them to avoid network disruption. It has individual status LEDs for each port, plus dc OK and activity LEDs.

When installed in a DEChub 90, the DECrepeater 90T is manageable remotely (via the DECbridge 90) from a DECnet node using the MOP/Console Carrier Protocol.

Features

- Identifies malfunctioning ports and automatically segments or restores them to avoid network disruption.
- Operates in standalone or DEChub 90 backplane configuration.
- Provides full repeater functions per port (no retiming module needed in the DEChub 90 backplane).

DECrepeater 90T Order Codes

Option	Order Code
For Standalone Use	
DECrepeater 90T	DETMR-**+
Hub-based Use	
DECrepeater 90T (without power supply) for inclusion in DEChub 90 backplane	DETMR-MA+
To convert the hub-based model to standalone model	
120 V power supply with internal power connection	H7082-AA
240 V power supply with IEC connection	H7082-AB
Snap-on cover for DEChub 90 model	H0342-AA

** Replace the ** with one of the following codes:
120 V – AA (United States, Canada, Japan)
240 V – AK (Switzerland), AD (Denmark), AE (United Kingdom, Ireland), AX (Germany, Austria, Belgium, Finland, Holland, Norway, Sweden, France, Spain), AI (Italy), BJ (India, S. Africa), AT (Israel), AZ (Australia, New Zealand)

+ Prefix the order code with DL- to order quantities of 12 units.

▲ For more information, contact your local Digital sales office.

DECrepeater 350 (DETPR)

The DECrepeater 350, Digital 802.3/Ethernet 10BaseT Twisted-Pair Multiport Repeater (DETPR), is an IEEE 802.3 10BaseT-compliant 8-port hub. It provides eight ports for connecting PCs, workstations or other intelligent devices via standard 8-pin RJ45 jacks to 802.3/Ethernet 10BaseT unshielded twisted-pair cabling and a single AUI port for connecting to standard baseband or transceiver cable.

The DECrepeater 350 has LED diagnostics that let network managers see at a glance whether power is working, and whether any individual segment is up (link integrity), and detects errors on a segment basis. Since the 10BaseT standard specifies that each segment have but one device attached to it, this tool virtually provides connectivity management to the device level.

The DECrepeater 350, like the DEMPR, retimes, amplifies, and repeats signals and must be counted as a repeater for configuration.

A maximum of two DETPRs cascaded are allowed.

The DECrepeater 350 compliance with 10BaseT requires the following for connectivity:

- 24 gauge, 100-ohm unshielded twisted-pair cabling
- 8-pin RJ45 connectors
- Star topology — home runs (not used in daisy-chain topologies)
- Multiple data signaling supported

DECrepeater 350 Power Cord Order Codes

Option	Order Code
DECrepeater 350 Power Cord	DETPR-**

** Replace the ** with one of the following codes: DA (United States), DC (Canada), DD (Denmark), DE (United Kingdom), DG (Germany), DI (Italy), DJ (Japan), DK (Switzerland), DP (France), DT (Israel), DX (Central Europe), DZ (Australia), EE (Ireland).

DEC EtherWORKS Turbo/TP (DE201)

The DEC EtherWORKS Turbo/TP is designed to comply with the 10BaseT specification for PC Controller Cards. Its new high-performance from the 16-bit data path, and self-test firmware make it a strong performance card. The card can be remotely booted, and has a small profile, fitting in most PC/AT-type slots, including high performance portables. DEC EtherWORKS Turbo/TP (DE201) comes with software drivers for DOS, and OS/2. It has been designed to be comply with NDIS creating compatibility with Novell Netware. ▲ Refer to "802.3/Ethernet PC Controllers" in this section for more information on this product.

Unshielded Twisted-Pair Media Access Unit (H3350)

Digital's Unshielded Twisted-Pair Media Access Unit (MAU) is designed to provide 10BaseT connectivity for devices other than PCs. Any device that is equipped with a standard 802.3/Ethernet card can use an H3350 to connect it to a 10BaseT hub repeater. It functions as a transceiver and has been designed to comply with the 10BaseT specification. It has an 8-pin RJ45 interface on the 10BaseT side, and an AUI 15-pin connector to the backbone. The H3350 has LED indicators for link integrity.

Twisted-Pair Products Specifications

	DECrepeater 90T	DECrepeater 350	Media Access Unit
Physical Characteristics			
Depth	14 cm (5.5 in)	30.48 cm (12.0 in)	10.16 cm (4.0 in)
Width	3.5 cm (1.4 in)	48.90 cm (19.25 in)	7.11 cm (2.8 in)
Height	28.0 cm (11.0 in)	11.76 cm (4.63 in)	3.05 cm (1.2 in)
Physical interface	1 ThinWire Port 8 RJ45	1 AUI (DB15) 8 RJ45	1 AUI (DB15) 1 RJ45
Power Requirements			
Nominal voltage	100 V to 120 V (-AA models only) 189 V to 240 V (all other models)	100 V to 120 V (-AA models only) 189 V to 240 V (all other models)	
Interface voltage	N/A	5 Vdc at 2.1 A (max) 12 Vdc RJ45 port at 0.35 A (max) 12 Vdc AUI port at 0.5 A (max)	12 Vdc AUI at 0.5 A (max)
Frequency	50 Hz to 60 Hz	47 Hz to 63 Hz	
Maximum current	1.8 A	0.9 A	
Maximum power	16 W	70 W	
Operating Environment			
Temperature	5° C to 50° C (41° F to 122° F)	5° C to 50° C (41° F to 122° F)	5° C to 50° C (41° F to 122° F)
Relative humidity	10% to 95% (noncondensing)	10% to 90% (noncondensing)	10% to 95% (noncondensing)

Note:

1. Refer to Appendix A, "802.3 Configuration Guidelines," in the current *Networks Buyer's Guide* for connectivity of unshielded twisted-pair systems.
2. To utilize the correct cabling products and components, refer to the OPEN DECconnect products in the current *Networks Buyer's Guide*.

Unshielded Twisted-Pair Product Order Codes	
Option	**Order Code**
8-port unshielded twisted-pair to Ethernet manageable repeater, part of the Workgroup family of products	*
8-port unshielded twisted-pair to Ethernet nonmanageable repeater, U.S., 120 V	DETPR-AA
8-port unshielded twisted-pair to Ethernet nonmanageable repeater, no plastic, U.S., 120 V	DETPR-BA
8-port unshielded twisted-pair to Ethernet nonmanageable repeater, international, 240 V	DETPR-AB
8-port unshielded twisted-pair to Ethernet nonmanageable repeater, no plastic, international, 240 V	DETPR-BB
Package of 10, 8-port unshielded twisted-pair to Ethernet nonmanageable repeaters, U.S., 120 V	DL-DETPR-AA
Package of 10, 8-port unshielded twisted-pair to Ethernet nonmanageable repeaters, international, 240 V	DL-DETPR-AB
Unshielded Twisted-Pair Media Access Unit allows for the connection of standard Ethernet products to unshielded twisted-pair	H3350-AA
8-pin MP to 8-pin MP, 4-conductor, 2-unshielded twisted-pair office cable with crossover for unshielded twisted-pair, 4 m (13 ft)	BN24F-04
8-pin MP to 8-pin MP, 4-conductor, 2-unshielded twisted-pair office cable with crossover for unshielded twisted-pair, 3 m (10 ft)	BN24F-03
8-pin MP to 8-pin MP, 8-conductor, 4-unshielded twisted-pair patch cable, pin-to-pin, 1 m (3 ft)	BN24G-01
8-pin MP to 8-pin MP, 8-conductor, 4-unshielded twisted-pair patch cable, pin-to-pin, 3 m (10 ft)	BN24G-03
8-pin MP to 8-pin MP, 8-conductor, 4-unshielded twisted-pair patch cable, pin-to-pin, 4 m (13 ft)	BN24G-04
Level 5 UTP Office Cabling (100 Ohm)	
RJ-45 to RJ-45 Adapter Cable 0.5 m (0.5 ft)	BN25G–OE
1.0 m (3.3 ft)	BN25G–01
3.0 m (9.8 ft)	BN25G–03
4.0 m (13.1 ft)	BN25G–04
7.0 m (23.0 ft)	BN25G–07

* For the order codes for this product, refer to "DECrepeater 90T" in this section.

802.3/Ethernet Adapters for IBM Shielded Twisted-Pair Cabling

The 802.3/Ethernet Adapters for IBM Shielded Twisted-Pair Cabling connect workstations and personal computers over IBM shielded twisted-pair cabling to 10-Mb/s, 802.3/Ethernet local area network by adapting from a ThinWire 802.3/Ethernet port in a workstation or PC to IBM shielded twisted-pair cabling type 1 or type 2. A second adapter sends the signal from the IBM cabling back again to connect to a Digital ThinWire Singleport Repeater (DESPR) or Multiport Repeater (DEMPR). This takes advantage of the Digital 802.3/Ethernet technology, while protecting the investment in installed IBM cabling.

Components of the 802.3/Ethernet Adapters for IBM Shielded Twisted-Pair Cabling are listed in the Order Code table. Contact your local sales representative for applied configuration information.

802.3/Ethernet Adapters for IBM Shielded Twisted-Pair Cabling Order Codes

Option	Order Code
802.3/Ethernet Adapters for IBM Shielded Twisted-Pair Cabling, complete starter kit for eight connections	H3301-AA
Office adapters (8-pack)	H3311-AA
Conversion cable for IBM Shielded Twisted-Pair to Digital ThinWire, 1 m (3 ft) length (8-pack)	BS10C-01
Conversion cable for IBM Shielded Twisted-Pair to Digital ThinWire, 3 m (10 ft) length (8-pack)	BS10D-03

Overview

ThinWire 802.3/Ethernet cable delivers 10 Mb/s 802.3/Ethernet speed to PCs, workstations, and computing systems.

ThinWire cabling and connection products are designed to the IEEE 802.3/Ethernet specification for Ethernet, which provides a simple, inexpensive, and flexible means of attaching devices to the local area network with industry-standard cable and BNC-type connectors.

DECrepeater 90C

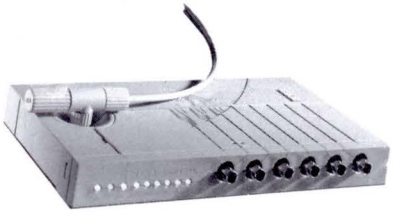

The DECrepeater 90C is a compact, 6-port repeater that connects PCs and workstations to a ThinWire 802.3/Ethernet LAN. The DECrepeater 90C is part of a family of products that can function as standalone units or can be snapped into a DEChub 90. ▲ Refer to the "DEChub 90" description in this section for more information on the WorkGroup Family of Networking Products.

The DECrepeater 90C has six ThinWire ports for connecting Ethernet segments and a ThinWire port to connect to a coaxial cable Ethernet backbone. Up to 29 stations can be attached to each port.

The DECrepeater 90C can to identify malfunctioning ports and automatically segment or restore them to avoid network disruption. It also features individual status LEDs for each port, plus dc OK and activity LEDs.

When installed in a DEChub 90, the DECrepeater 90C is manageable remotely (via the DECbridge 90) from a DECnet node using the MOP/Console Carrier Protocol.

Features

- Identifies malfunctioning ports and automatically segments or restores them to avoid network disruption.
- Offers improved manageability in star and unstructured wiring topologies.
- Operates in standalone or DEChub 90 backplane configuration.
- Provides full repeater functionality per port (no retiming module needed in the DEChub 90 backplane).

Specifications	
Physical Characteristics	
Height	27.9 cm (11.0 in)
Width	3.2 cm (1.3 in)
Depth	14.0 cm (5.5 in)
Weight	0.77 kg (1.7 lbs) (without power supply)
Power Requirements	
Nominal voltage	100 V to 120 V (-AA models only)
	189 V to 240 V (all other models)
Frequency	50 Hz to 60 Hz
Maximum current	1.8 A
Maximum power	16 W
Operating Environment	
Temperature	5° C to 50° C (41° F to 122° F)
Relative humidity	10% to 95% (noncondensing)

DECrepeater 90C Order Codes	
Option	**Order Code**
For Standalone Use	
DECrepeater 90C	DECMR-**+
Hub-based Use	
DECrepeater 90C (without power supply) for inclusion in DEChub 90 backplane	DECMR-MA+
To convert the hub-based model to standalone model	
120 V power supply with internal power connection	H7082-AA
240 V power supply with IEC connection	H7082-AB
Snap-on cover for DEChub 90 model of DECrepeater 90C	H0342-AA

** Replace the ** with one of the following codes:
120 V – AA (United States, Canada, Japan)
240 V – AK (Switzerland), AD (Denmark), AE (United Kingdom, Ireland), AX (Germany, Austria, Belgium, Finland, Holland, Norway, Sweden, France, Spain), AI (Italy), BJ (India, S. Africa), AT (Israel), AZ (Australia, New Zealand)

+ Prefix the order code with DL- to order quantities of 12 units.

ThinWire Ethernet Multiport Repeater (DEMPR)



The ThinWire Ethernet Multiport Repeater (DEMPR) provides eight ports for connection of eight ThinWire 802.3/Ethernet segments, and one port for connection to standard baseband cable. It can be used as a standalone device, called a local DEMPR configuration, or connected to standard baseband cable, called a global DEMPR configuration. The DEMPR retimes, amplifies, and repeats signals between each of its nine ports. A DEMPR must be counted as a repeater when configuring a 802.3/Ethernet network. ▲ Refer to the "Repeater Configuration Rules" in this section for other configurations.

Up to eight DEMPRs can be connected to a Local Network Interconnect (DELNI). This configuration provides up to 64 cable segments for connecting as many as 1,023 stations (Ethernet limit). This configuration, in turn, can be used in a standalone network connected to standard baseband 802.3/Ethernet cable, or connected to an ORnet fiber backbone or connected to FDDI. ▲ Refer to Appendix D for further information on Chipcom ORnet products.

Standalone (Local) Configuration

In standalone or local configurations, a multiport repeater (DEMPR) can act as a PC or LAN hub. Up to eight ThinWire segments run from the DEMPR to the local work areas without interruption. In the local work area, ThinWire cables connect to PCs, workstations, and low-end systems. The DEMPR connects devices from up to eight local work areas in this configuration. The DEMPR also isolates faults in a segment, keeping the rest of the segments in operation. The following figure illustrates a standalone configuration in local work areas.

Workgroup LAN Hub

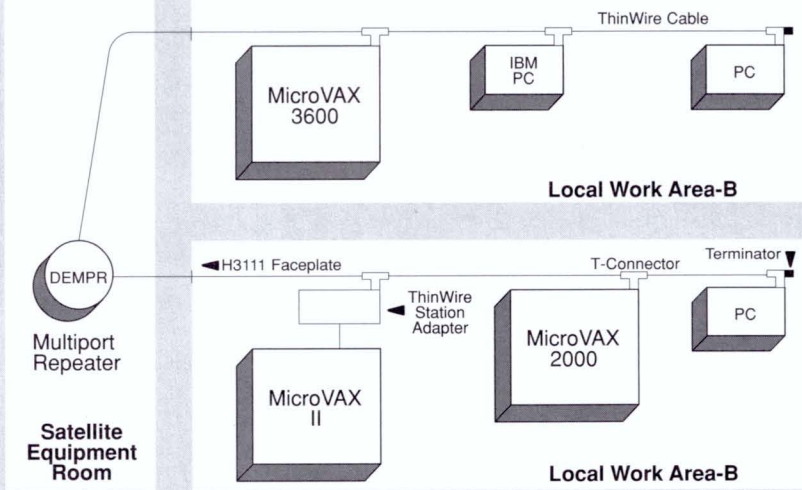

TBG-029-00

A larger standalone network can be formed by connecting up to eight DEMPR hubs to a Local Network Interconnect (DELNI). This configuration can service up to 64 local work areas.

Connected (Global) Configurations

In connected or global configurations, multiple standalone configurations are connected to standard baseband 802.3/Ethernet cable. A DEMPR with up to eight ThinWire segments can be connected to the standard baseband cable using a standard baseband transceiver. This configuration provides standard baseband 802.3/Ethernet service for up to eight local work areas. (A single ThinWire segment with up to 29 stations may be connected to standard baseband cable using a DESPR.)

A DELNI with up to eight attached DEMPRs/DESPRs must be connected to standard baseband cable using an H4005 (or H4000-BA) transceiver. This configuration provides standard 802.3/Ethernet service for up to 64 local work areas.

When a DELNI/DEMPR combination is connected to a standard baseband cable segment, the following restrictions apply:

- The standard segment must be less than 300 meters (984 feet).
- Connection to other standard segments must use a LAN bridge (DEBET) only.

When connected to standard baseband cable, the DEMPR or DESPR counts as a repeater in the configuration. A message transmitted on a local area network must pass through no more than two repeaters (DEREP, DEMPR, or DESPR) before either reaching its destination or passing through a LAN bridge.

ThinWire Ethernet Singleport Repeater (DESPR)

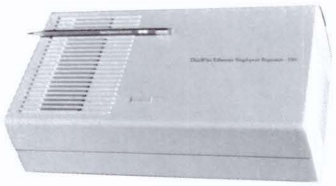

The DECrepeater 150 Singleport Repeater (DESPR) provides the means for connecting devices equipped with a ThinWire (RG58-type) coaxial BNC connector to a 802.3/Ethernet backbone via an industry-standard 15-pin AUI/ transceiver connector and transceiver cable.

The DECrepeater 150 is packaged in a die cast aluminum enclosure, which acts as a heatsink providing convection cooling, eliminating the need for a fan. The separate green and red LEDs provide power and port status, making network diagnostics easier. Its compact size makes it suitable for desktop or wallmount applications, and can be rack mounted when installed with the H9544-MK universal rack mounting shelf kit.

This compact size allows a PC LAN manager to cost effectively and inconspicuously connect isolated ThinWire coaxial-based PC LANs to an enterprise local area network. This will allow PC LAN users to accept network resources and services as full and equal members on the enterprise LAN.

Qualification

A message transmitted on a local area network must pass through no more than two repeaters (DECrepeater 200, DEMPR, or DESPR) before either reaching its destination or passing through a LAN bridge.

Features

- Serial station connections (daisy-chaining) support up to 29 stations per 185-meter (607-feet) segment using traditional T-connector station attachments.
- Daisy-chaining of stations via H3114-AA equipped faceplates supports a total of eight stations and 125 meters (410 feet) of ThinWire cable per segment.
- Supports the attachment to a ThinWire backbone segment via DECextender 204 (DESTA) through the 15-pin AUI backbone connector.

DEMPR/DESPR Specifications

Physical Characteristics	DEMPR -AA/AB Models	DESPR -EE/-EF Models
Length	31.11 cm (12.25 in)	17.78 cm (7 in)
Width	48.9 cm (19.25 in)	33.02 cm (13 in)
Height	11.43 cm (4.5 in)	8.89 cm (3.5 in)
Power Requirements	**DEMPR -AA/DESPR-EE**	**DEMPR -AB/DESPR-EF**
Nominal voltage	100 to 120 Vac 3-wire single phase	189 to 240 Vac 1 N-PE single phase
Frequency	47 to 63 Hz	47 to 63 Hz
Maximum current	0.83 A	0.42 A
Maximum power	40 W	40 W
Operating Environment		
Temperature	5° C to 50° C (41° F to 122° F)	
Relative humidity	10% to 90% (noncondensing)	

DEMPR/DESPR Order Codes

Option	Order Code
ThinWire Ethernet Multiport Repeater, 120 V, includes power cord	DEMPR-AA
ThinWire Ethernet Multiport Repeater, 240 V, requires power cord	DEMPR-AB
ThinWire Ethernet Singleport Repeater, 120 V, includes power cord	DESPR-EE
ThinWire Ethernet Singleport Repeater, 240 V, requires power cord	DESPR-EF
Universal Rack Mounting Shelf Kit for DESPR, singleport repeater	H9544-MK
DEMPR/DESPR Country Kits	BN0*A-2E

* Replace the * with one of the following codes: 2 (United Kingdom, Ireland), 3 (Austria, Belgium, Finland, France, Germany, Netherlands, Norway, Portugal, Spain, Sweden), 4 (Switzerland), 5 (Australia, New Zealand), 6 (Denmark), 7 (Italy)

Repeater Configuration Rules

Product	Media	Physical Topology	Structured[1] Unstructured[1]	Stations per Segment	Connections per Device	Distance per Segment (meters)
DECrepeater 90T	Unshielded twisted-pair	Star/daisy-chain	Structured/ Unstructured	1	8	100
DETPR 10BaseT	Unshielded twisted-pair	Star	Structured	1	8	100
DECrepeater 90C	ThinWire	Star/daisy-chain	Structured/ Unstructured	29	6	100
DEMPR 10Base2	ThinWire	Daisy-chain (in office)	Unstructured	29	232	185[2]
DEMPR 10Base2	ThinWire	Daisy-chain (behind wall)	Structured	8	64	125[3]
DEMPR 10Base2	ThinWire	Star	Structured	1	8	185[2]
DEMPR 10Base2	Unshielded twisted-pair/ ThinWire	Star/daisy-chain	Structured	4	32	70
DEMPR 10Base2	Unshielded twisted-pair/ ThinWire	Star/daisy-chain	Structured	4	32	70
DEMPR 10Base2	Unshielded twisted-pair/ ThinWire	Star	Structured	1	8	100
DESPR 10Base2	ThinWire	Daisy-chain	Unstructured	29	29	185[2]
DESPR 10Base2	ThinWire	Daisy-chain	Structured	8	8	125[3]
DEMPR 10Base2	Unshielded twisted-pair/ ThinWire	Star/daisy-chain	Structured	4	32	100
DEMPR 10Base2	Shielded	Star	Structured	1	8	100

[1]See the OPEN DECconnect section on Structured vs Unstructured Cabling. Note: The EIA/TIA 568 standard which also folds in the 10BaseT standard does not support daisy-chaining. The recommended physical topology is a star configuration.
[2]185 m (607 ft) includes office cable lengths.
[3]125 m (410 ft) does not include office cable lengths.

DECrepeater 200

The DECrepeater 200 (DEREN) is a hardware device that does not require any software support for its operation or maintenance. It connects two segments of standard baseband IEEE 802.3/Ethernet cable to extend a LAN beyond the 500 meter (1,640 feet) single-cable limit. The DECrepeater 200 receives signals from one 802.3/Ethernet LAN segment, retimes and amplifies the signals, and retransmits (or repeats) them to another cable segment, thus increasing the length of a LAN and the number of devices supported on the LAN.

The DECrepeater 200 is available in two versions: local (thick wire coaxial) and fiber optic. The local repeater connects two standard baseband 802.3/Ethernet segments via transceiver cables and H4005 transceivers. (H4000 or H4000-BA transceivers are also supported.) A single local repeater connects two standard baseband 802.3/Ethernet segments, which are separated by no more than 100 meters (328 feet).

Fiber Optic IEEE 802.3/Ethernet Repeater (DEREN)

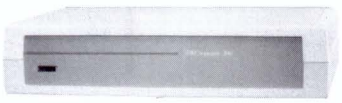

The fiber optic repeater connects one standard baseband 802.3/Ethernet segment (via transceiver cable and H4005 transceiver) to a fiber optic cable link. The other end of the fiber optic cable is connected to another fiber optic DECrepeater 200. The maximum length of fiber link interconnected by two fiber optic repeaters is 1 km (3,282 feet). If four fiber optic repeaters are located in series, the total length of fiber optic cable must be less than or equal to 1 km. These distances are defined by the IEEE 802.3/Ethernet specifications.

The fiber optic versions of the DECrepeater 200 accommodate floor-to-floor and building-to-building connections. It supports industry-standard 62.5/125 micron multimode fiber as well as 50/125, 85/125, and 100/140 micron multimode fiber, providing configuration flexibility. The DEREN-RP/RQ can be used with the LAN Bridge 150 to create a fiber optic bridge-repeater link.

Features

- IEEE 802.3 design provides multivendor interoperability.
- Enhanced problem isolation and "transceiver jabber lock-up protection" assure network availability.
- Auto-selection between 802.3 or Ethernet networks allows configuration flexibility.
- Fiber-break detection assists in network troubleshooting (available on the DEREN-RC/RD only).
- Enhanced internal self-test features simplify fault isolation, increase network reliability, and reduce maintenance costs.
- Multiple LED status indicators allow quicker diagnosis of problems, including misconfiguration.
- Customer-installable and user-friendly.
- Compatible with Ethernet V2.0, protecting prior network investments.

Specifications		
Physical Characteristics	**With Phastic Enclosure**	**Without Plastic Enclosure**
Height	11.70 cm (4.6 in)	8.89 cm (3.5 in)
Width	49.30 cm (19.4 in)	43.49 cm (17.12 in)
Depth	31.20 cm (12.3 in)	30.48 cm (12 in)
Weight	5.08 kg (11.2 lb)	3.40 kg (7.5 lb)
Power Requirements		
Voltage (nominal)	120 V 240 V range	88 Vac to 132 Vac
Current	120 V 240 V	176 Vac to 264 Vac
Frequency	47 to 63 Hz	1.6 A 0.8 A
Power Consumption	160 W	
Heat dissipation	500 Btu/hr	
Operating Environment		
Temperature	5° C to 50° C (41° F to 122° F)	
Relative Humidity	10% to 95% (noncondensing)	
Air Flow	A minimum of 10 cm (4 in) of space must be provided on both ends for adequate air flow	

Fiber Optic Specifications			
Fiber Optic* Size (diameter in microns)	**DEREN-RC/RD Distance** (km)**	**Power Budget (dB loss budget)**	**DEREN-RP/RQ Budget (dB)**
50/125	1.0	9	6.5
62.5/125	1.0	14	10.5
85/125	1.0	15	11.5
100/140	1.0	16	12.5

*Connector type: ST – DEREN-RC/RD, SMA – DEREN-RP/RQ.

**Distance limitation is due to 802.3 and Ethernet timing specifications, not power budget.

Qualifications

While it is recommended that the DECrepeater 200 be used with the H4005 transceiver (with heartbeat disabled), it will also work with an H4000 or an H4000-BA. When the DECrepeater 200 is used with a transceiver without heartbeat (H4005 or H4000-BA), it operates as an IEEE 802.3 repeater. When used with the H4000, it operates as an Ethernet-compatible repeater. The DECrepeater 200's auto-select feature automatically configures the repeater in IEEE 802.3 or Ethernet mode, based upon the repeater's attached transceiver.

A fiber optic LAN Bridge 150 can only be connected via a fiber optic link to a fiber optic DECrepeater 200 DEREN-RP/RQ.

The DECrepeater 200 repeater cannot be used in broadband IEEE 802.3/Ethernet networks or between baseband and broadband IEEE 802.3/Ethernet networks.

The DECrepeater 200 may not be connected to a segment via a DELNI.

Ordering Information

All DECrepeater 200 models include installation instructions. Note that the -AA, -RC and -RP models include a U.S. power cord, and the -AB, -RD and -RQ models require a power cord kit. The DECrepeater 200 uses the same power cord kit as the DECserver 550, described elsewhere in this section. A U.S./Canada power cord kit is available to retrofit models ordered for 240 V settings.

Fiber Optic DECrepeater 200-to-LAN Bridge Configuration

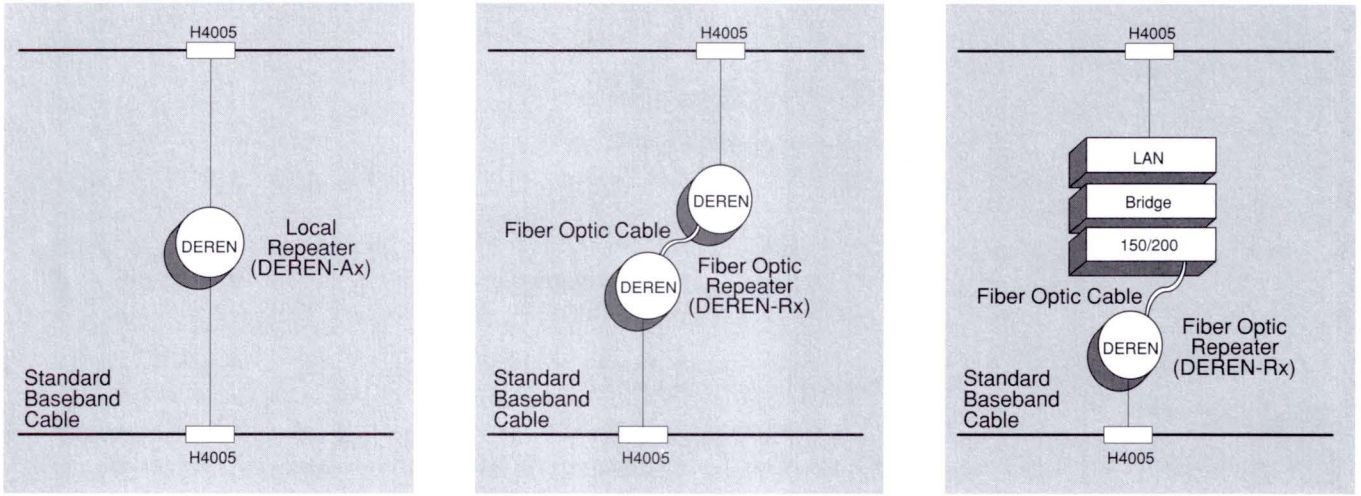

TBG-031-00

DECrepeater 200 Order Codes

Option	Order Codes
IEEE 802.3/Ethernet local repeater, 120 V, includes installation instructions and U.S. power cord	DEREN-AA
IEEE 802.3/Ethernet local repeater, 240 V, includes installation instructions, no power cord	DEREN-AB
IEEE 802.3/Ethernet (FOIRL) remote (fiber) repeater, 120 V, includes installation instructions and U.S. power cord	DEREN–RC
IEEE 802.3/Ethernet (FOIRL) remote (fiber) repeater, 240 V, includes installation instructions, no power cord	DEREN-RD
IEEE 802.3/Ethernet remote (fiber) repeater compatible only with the DEREN-RP/RQ and LAN Bridge 150 DEBET-RP/RQ, 120 V, includes installation instructions and U.S. power cord	DEREN-RP
IEEE 802.3/Ethernet remote (fiber) repeater compatible only with the DEREN-RP/RQ and LAN Bridge 150 DEBET-RP/RQ, 240 V, includes installation instructions and U.S. power cord	DEREN-RQ
802.3/Ethernet transceiver for use with DEREN 802.3/Ethernet repeater	H4005
DECrepeater 200 Country Kits	BN20*-2E

* Replace the * with one of the following codes: A (United States, Canada), B (Japan), C (Australia, New Zealand), D (Belgium, Finland, France, Germany, Holland, Norway, Spain, Sweden), E (United Kingdom, Ireland), F (Switzerland), H (Denmark), J (Italy), K (India, South Africa), L (Israel)

ThinWire Ethernet Station Adapter DECextender 204 (DESTA)



The DECextender 204 (DESTA) provides a means of connecting industry-standard Ethernet controllers/AUI or stations equipped with a 15-pin connector, (i.e. MicroVAX 2000, UNIBUS, Q-bus, VAXBI, DECservers, etc.) to a ThinWire network segment via a ThinWire BNC connector.

The DESTA has one 15-pin connector port that allows it to be mounted in or near the 802.3/Ethernet station, and a second port for connection to the ThinWire cable. It contains 802.3/Ethernet transceiver circuitry and provides transceiver functions. The DESTA is very compact, and is powered from the controller.

Features

- Contains short-detection circuitry that isolates network media faults (cable shorts) to prevent data-packet loss, by isolating the affected network segment.
- The DESTA can support a serial connection of up to 30 stations per ThinWire cable (or segment).
- Utilizes the same hardware enclosure as the H4005 transceiver.

Specifications	
Physical Characteristics	
Length	8.7 cm (3.0 in)
Width	9.8 cm (4.0 in)
Height	3.7 cm (1.5 in)
Power Requirements	
Input voltage (from controller)	12 V
Voltage required at transceiver	–9 V
Maximum current	250 mA
Typical current	200 to 250 mA
Environmental Class	C (Refer to Appendix C for details.)

DESTA Order Code	
Option	**Order Code**
ThinWire Ethernet Station Adapter	DESTA-BA

Digital's OPEN DECconnect System supports the widest range of media types and provides the broadest range of networking solutions of any major wiring system. It is able to support the smallest workgroup LAN or the largest multivendor enterprise network. The OPEN DECconnect System provides unequaled modularity and flexibility to accommodate moves, changes, and system growth.

This structured cabling system provides a physical connection between individual devices on a local area network. It complies with the *EIA/TIA-568 TR 41.8.1 Commercial Building Wiring Standard*, which is the basis for all worldwide campus and building wiring in the 1990s. OPEN DECconnect is a multiprotocol, application-independent wiring utility that supports a wide range of applications from EIA-423 terminal connections to 100 Mb/s FDDI.

The OPEN DECconnect communications system encompasses the full family of Digital connectivity products from 802.3/Ethernet-based active electronics to a structured cabling system utilizing both fiber optics and copper media. OPEN DECconnect provides access to corporate computer networks, telephone communications, video, sensing, and imaging. It is cost-effective in that it optimizes applications such as 10BaseT, FDDI, ISDN, IBM 3270, IBM AS400, the IBM 3x series, Token Ring 4/16 MB, and AppleTalk.

New OPEN DECconnect Solutions

OPEN DECconnect combines separate communications technologies into one cohesive networking solution with:

- ANSI X3T9.5 (FDDI) and EIA/TIA 568-compliant 62.5/125 micron fiber optic cable network backbones for FDDI and fiber optic Ethernet communications.
- 10BaseT compliancy of unshielded twisted-pair for direct connections for up to 10 Mb/s 802.3/Ethernet communications.
- ThinWire cable for 10 Mb/s 802.3/Ethernet communications to PCs, workstations, and departmental systems.
- EIA/TIA 568 standard data grade compliancy for unshielded twisted-pair cable for both data and telephone connections.
- High-performance data grade unshielded twisted-pair for data applications up to 100 Mb/s.
- Shielded, high-performance data grade 100 ohm twisted-pair for reduced SMI/RFI susceptibility.
- Standard broadband cable for video connections.

Cables are pulled in a star topology between two easily accessible points: from the communication outlet which is located in the work area/office, and the end point of the wiring system, known as the Main Distribution Frame (MDF). The OPEN DECconnect System structure is contingent on the size of the network, the number and layout of buildings to various distribution frames or wiring closets, and the number of users. Hierarchical physical star topology is the EIA/TIA industry standard for cabling buildings. It combines maximum office space coverage with ease of network management and maintenance. Maintenance performed at the central location can significantly reduce the cost of moves, adds, and changes.

OPEN DECconnect is a structured cabling system. Structured cabling is preplanned cabling that has been designed to implement future services and growth. This drives the incremental installation cost down.

Structured Wiring: Planning for the Future

The Electronic Industries Association (EIA) and the Telecommunications Industries Association (TIA) have developed a standard for telecommunications wiring for commercial buildings: *EIA/TIA-568 Commercial Building Wiring Standard.*

The goal of the standard is to provide a uniform wiring system that supports multiproduct, multivendor environments. Digital participated in the standards process and supports its implementation.

A well-planned structured cable plant allows network planners and managers to accommodate virtually any number of moves easily, inexpensively, and with no disruption to the organization.

Advantages of Structured Wiring

Because the cabling infrastructure is such a critical part of a LAN, proper planning and execution of building topology mapping is critical to its success. Structured wiring ensures properly designed pathways.

A structured cabling system such as OPEN DECconnect consists of families of components such as transmission (cables), circuit administration, and other hardware such as communication connectors, jacks, plugs, adapters, baluns, patch panel system and transmission electronics.

The structured cabling system should also be capable of interconnecting many different communications devices such as data, imaging, sensing, video, and voice.

Structured vs Unstructured Cabling

The following comparison describes the advantage of structured wiring:

Structured Wiring	Unstructured Wiring
Standards based	Usually non-standards based
Application independent	Prone to application dependency
Allows adds, moves, and changes of equipment and people	Often requires rewiring for adds, moves, and changes of equipment and people
Easy to reconfigure wiring and communication equipment	Difficult to reconfigure wiring and communication equipment
Modular design allows flexibility	Non-modular, inflexible system
Supports a multi-application environment	Dedicated to specific purposes; quickly obsolete
Defines distance and topology	Free form
Allows for administration and maintenance of cable plant facilitates the isolation of equipment and cable problems	Generally not labeled and documented; limited management and problem isolation capabilities

EIA/TIA Standard

The OPEN DECconnect system supports the EIA (Electronics Industries Association) and TIA (Telecommunications Industries Association) 568 Commercial Building Wiring Standard. The standard covers four general areas:

- The media itself
- Topology of the media
- Termination/connectors
- Administration

The *EIA/TIA-568 Commercial Building Wiring Standard.* recommends the following media and connectors:

- 100-ohm unshielded twisted-pair (UTP) cable — 4 pairs, 8-pin modular connector (ISO 8877)
- 150-ohm shielded twisted-pair (STP) cable — 2 pairs, IBM data connector
- 50-ohm ThinWire coaxial cable — IEEE 10Base2, standard BNC connector
- 62.5/125 multimode fiber cable (connector type currently is not specified by standards; however, Digital recommends using 2.5-mm bayonet ST type connectors for multimode applications.)

The wiring standard also specifies topology as a hierarchical physical star with distances specified.

EIA/TIA 568 Commercial Building Wiring Standards

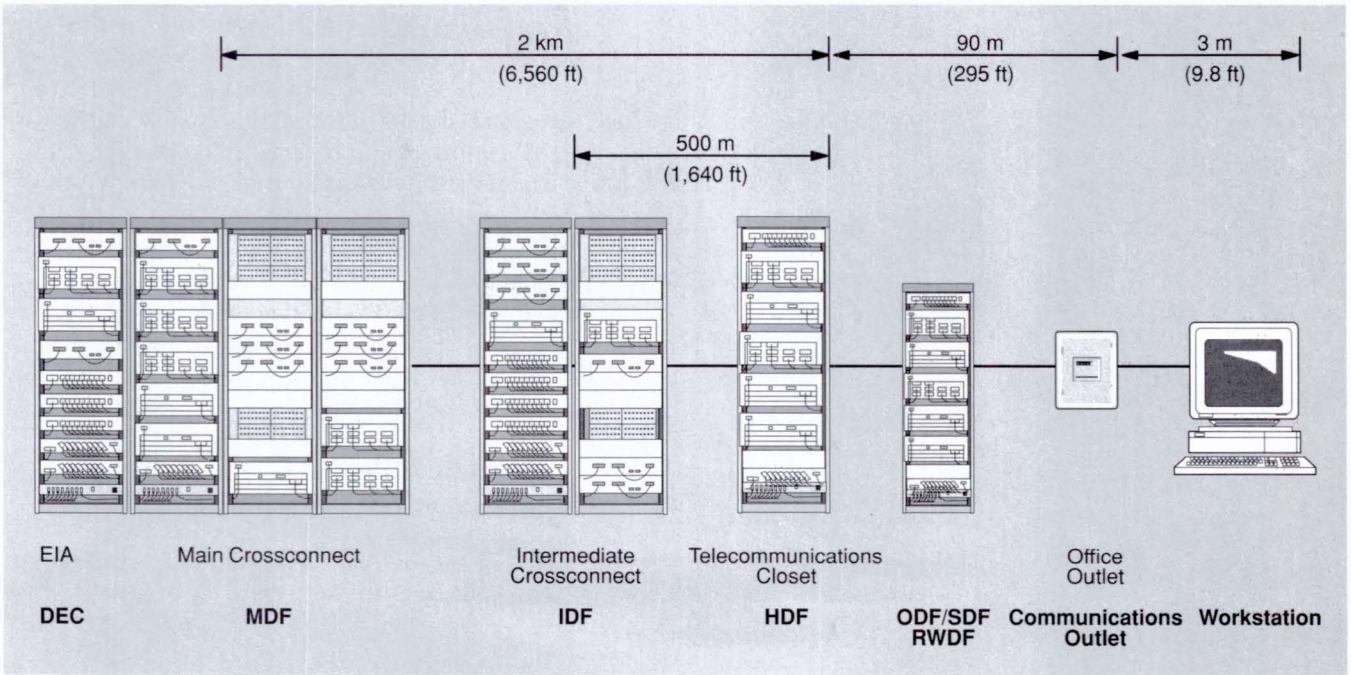

TBG-156-00

OPEN DECconnect Structured Wiring Architecture

As an EIA/TIA 568-compliant structured wiring system, the OPEN DECconnect System's campus environment concept is designed to serve all campus and building backbone fiber optic communications now and provide for future communications needs. The OPEN DECconnect horizontal/work area connectivity is designed to provide for work area connectivity with unshielded twisted-pair wiring to provide users with a cost-effective wiring solution.

Digital's OPEN DECconnect structured wiring architecture contains five subsystems that comprise a wiring system as follows:

- Campus backbone subsystem — This subsystem connects all the buildings of the campus site and consists of the point of connection for interbuildings as well as wide area communication. It contains the Main Distribution Frame (MDF), which houses the active and passive network components used in connecting the circuits in a multibuilding campus. It extends the circuits in one building to communications devices and equipment located in other buildings within the campus.
- Building backbone subsystem — This subsystem is the point of connection from a building's campus backbone subsystem to each horizontal wiring subsystem through the Intermediate Distribution Frame (IDF), which houses the active, passive, and support components for connecting interbuilding and intrabuilding cabling.
- Horizontal wiring subsystem — This subsystem provides the connection between the work area and building backbone, which includes the Horizontal Distribution Frame (HDF). The HDF includes the active, passive, and support components that connect the horizontal wiring and building backbone.
- Work area wiring subsystem — This subsystem consists of the wiring needed to connect the work area active equipment (desktop devices) to the horizontal/office communication outlet. For voice or data, the communication outlets (faceplate or wallbox) offer media choices of modular, interchangeable components.
- Administration subsystem — This subsystem includes the crossconnects and interconnects to connect the five distribution subsystems. It allows administration of communication connections of the structured wiring to various parts of a building as needs change.

OPEN DECconnect Product Overview

The single-connection point for all network services in the office or work area are the OPEN DECconnect communication outlets (faceplates and wallboxes). The user's terminal, personal computer or workstation, telephone, and video equipment, plug into the four outlets on the faceplate. The wallbox is another user communication outlet that can accommodate either fiber optics or copper connectivity.

The HDF/ODF within a floor of a building can service many users encompassing a sizable configuration. The Office Communications Cabinet (OCC) or ODF offers a smaller but secure alternative. The HDF/ODF serves two functions:

- It serves as a central crossconnection point for all radial office wiring, such as unshielded twisted-pair cabling for desktop devices and telephones; ThinWire cable for 802.3/Ethernet services to personal computer and office workstations. It also supports fiber optics for data communications.
- It provides mounting space for all the active network hardware components, such as multiport repeaters, terminal servers, bridges, and FDDI wiring concentrators.

The MDF and IDF configuration limitations are dependent on the thermal capacity and size of the equipment room. The temperature requirements of the MDF and IDFs are contingent on the amount of air conditioning needed to maintain a certain temperature at these distribution points.

These distribution points are located within each subsystem as shown in the following figure. Since the FDDI DECbridge 500 interconnects a building backbone of 802.3/Ethernet networks, it is located in an IDF.

OPEN DECconnect System Network

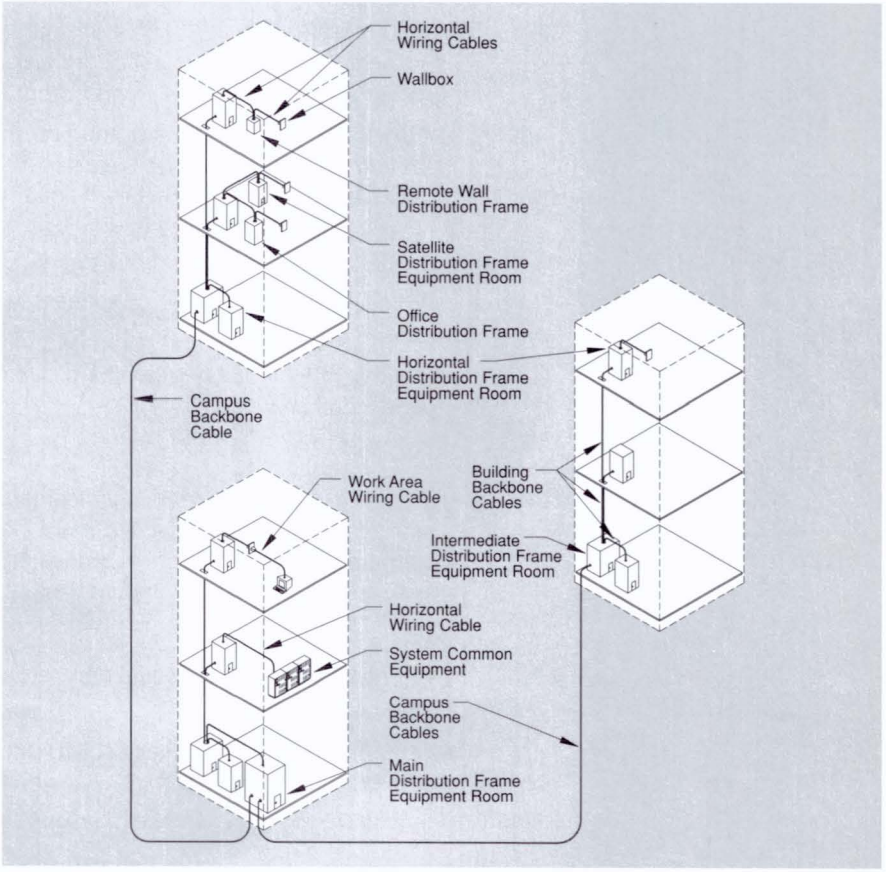

TBG-018-00

OPEN DECconnect Fiber Optic Network

The OPEN DECconnect Fiber Optic Network program provides the documentation and components that allow the design and installation of a fiber optic, passive structured wiring system to support applications as small as a local work group or as large as a multibuilding campus. This system is designed and optimized for FDDI and fiber optic Ethernet.

The OPEN DECconnect fiber optic network architecture complies with the EIA/TIA 568 Building Wiring Standard and expands on the standard to provide a total solution for integrating Digital's active networking equipment into the EIA/TIA 568-compliant passive wiring structure.

The OPEN DECconnect fiber optic program provides, via Network Integration Services (NIS), a complete set of design, certification, and installation services for the fiber optic network.

Features

- Industry-standard EIA/TIA 568-compliance creates an open multivendor environment.
- Multifunction, application-independent, fiber optic, hierarchical physical star topology is easy to manage and accommodates various logical topologies (star, bus, ring, tree, point-to-point).
- Is the building block for FDDI products, which supports new technologies and accommodates the user's growth needs.
- Fully tested components and component specifications, integrated within a structured wiring system, assure the ability to build a cable plant to installation requirements with reliable Digital qualified components.
- Provides an easy-to-use, comprehensive, step-by-step planning, design, and implementation process.
- Provides migration capabilities, allowing integration of active devices into a passive cabling plant.
- Fiber optic technology from campus to desktop devices, increases media permeation and choices.

Fiber Optic Advantages

The appeal of fiber optics as a medium is a direct result of its advantages over other media. These advantages make fiber optics an efficient and cost-effective medium in many applications. In local area networking, fiber optics is being seen as a more powerful medium choice as computing power intensifies along with the user's demand for higher and reliable service. Advantages include:

- High bandwidth capacity and data rate.
- Low transmission loss.
- Electromagnetic Interference (EMI) immunity — Fiber is a dielectric and is not affected by electromagnetic fields which is an advantage over copper.
- Small size and light weight — Useful for installation especially where there are real estate issues.
- Security — It is difficult to tap a fiber optic cable because fiber does not radiate energy (EMI fields).

- Safety and electrical isolation — Its dielectric properties makes it immune to outside interferences such as fluorescent lighting, power cables, machinery, and lightning. It is impervious to stray fields and crosstalk caused by other nearby data transmission cables.

The structured wiring hierarchy consists of the following distribution points which are shown in EIA/TIA and OPEN DECconnect terminology, and the Digital FDDI hardware products that are supported within those distribution points.

Distribution Points and FDDI Products

EIA/TIA	OPEN DECconnect*	Digital FDDI Products
MC (Main Crossconnect)	MDF	DECconcentrator 500
IC (Intermediate Crossconnect)	IDF	DECconcentrator 500, DECbridge 500
TC (Telecommunications Closet)	HDF	DECconcentrator 500, DECbridge 500
TC	SDF	DECconcentrator 500, DECbridge 500
TC	ODF	DECconcentrator 500, DECbridge 500

* MDF = Main Distribution Frame, IDF = Intermediate Distribution Frame, HDF = Horizontal Distribution Frame, ODF = Office Distribution Frame, SDF = Satellite Distribution Frame

Note: A proper design must include the thermal and acoustic constraints within the equipment room and distribution frames.

Fiber Optic Structured Wiring Strategy

The OPEN DECconnect System fiber optic approach to a site's structured wiring affects the design and implementation of crossconnect and interconnect administration points, labeling and installation of cable and components, and management of the administration points.

The fiber type recommended by both EIA/TIA and ANSI FDDI is 62.5/125 micron dual-window multimode fiber. For all new installations, Digital recommends this fiber type, as well as 8.5–10/125 micron single-mode fiber for future growth and applications. ANSI FDDI specifies the use of 1,300 nm wavelength.

The following table lists the minimum recommendation for fiber optic cable between various distribution points (spare fibers are already included).

Recommended Fiber Counts

Distribution Points	Minimum Recommended Fiber Count	
	Multimode	**Single-Mode**
MDF-to-IDF	48[2]	12[2]
IDF-to-HDF	24	6
HDF-to-SDF	6	N/A
HDF-to-ODF	6	N/A
HDF-to-RWDF[1]	12	N/A
Wallbox	4	N/A

[1]RWDF = Remote Wall Distribution Frame
[2]This fiber count represents two separate 24-fiber cables. One provides direct campus backbone connection. The other provides redundant campus backbone connection.

The cabling fiber count used in structured wiring is critical to current and future cabling needs and solutions. Many of the fiber optic cables installed for today's technology will be integrated into communications networks of future technologies. Digital recommends adding 50% to 100% to the actual fiber count to account for spare fibers needed for future growth.

Fiber Optic Components

The OPEN DECconnect Fiber Optic Program provides a complete set of quality standard components required to build an OPEN DECconnect fiber optic cable plant. All recommended components have been tested at the system level to ensure reliable installations. Specific components (including connectors, couplers, splices and cables), were selected only after passing selected EIA 455 fiber optic test procedures. These procedures ensure that components will meet specifications when installed and will continue to perform with minimal degradation over time.

OPEN DECconnect Horizontal Structured Wiring

The Horizontal Distribution Subsystem provides the physical layer media connection from the building backbone to the work area wiring. This subsystem includes the distribution frame in the wiring closet, connecting hardware, horizontal wiring, and telecommunications outlet. The EIA/TIA-568 Standard requires a star wiring topology and specific maximum distances for the horizontal wiring.

OPEN DECconnect Radial (Star) Topology Work Area

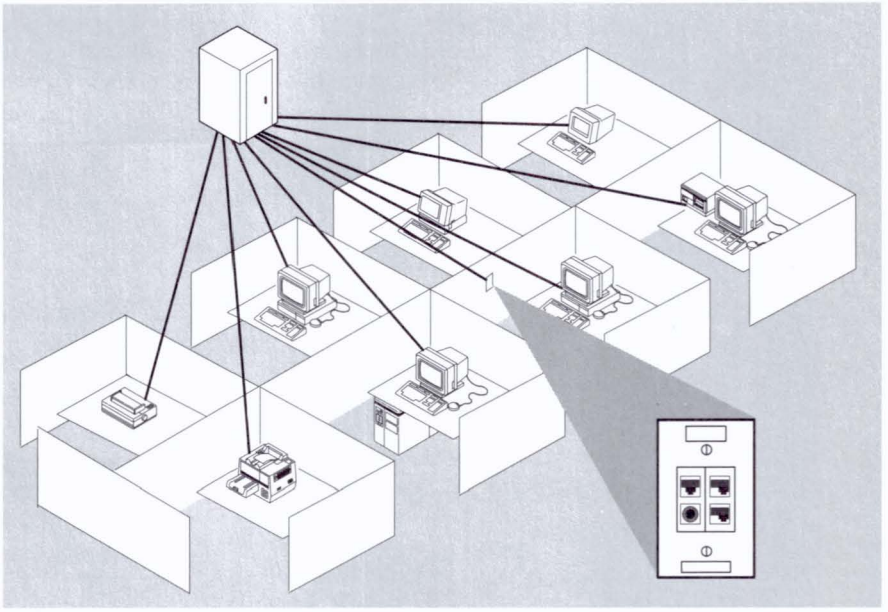

TBG-019-00

Unshielded Twisted-Pair Cabling

Digital's twisted-pair 802.3/Ethernet family of solutions is designed to comply with the IEEE 802.3 10BaseT specifications. Unshielded twisted-pair is a widely accepted medium in horizontal distribution and work area connectivity due to its reasonable cost per connection.

Using the OPEN DECconnect structured wiring architecture, 10BaseT runs on 24-gauge, 100-ohm unshielded twisted-pair cable. The cable specified is 8-wire, 4-pair: 2-pair cable for 10BaseT (data) connection and 2-pair cable for additional service (such as voice).

OPEN DECconnect unshielded twisted-pair cabling brings full 802.3/Ethernet capability to the desktop using the IEEE 802.3 10BaseT product set.

OPEN DECconnect supports both a standard data grade, 4-pair, 24-gauge, 100-ohm, unshielded twisted-pair cable and a high-performance grade, 4-pair, 24-gauge, 100-ohm, twisted-pair cable. High-performance grade cables are available both in unshielded and shielded versions. In a standard structured cabling system, two 4-pair cables (one for voice and one for data) would be brought to each user.

The standard data grade unshielded twisted-pair cables can support many applications including

- 802.3/Ethernet (10BaseT)
- 802.5/Token Ring 4 MB
- VT terminal connectivity
- ISDN
- IBM AS400 and 3x series
- IBM 3270

- AppleTalk
- Voice

High-performance data grade cables will support all of the applications that are supported by standard data grade cables as well as 16 Mb Token Ring. The specifications for OPEN DECconnect high-performance data grade cables were developed to support data applications to 100 Mb for EIA/TIA 568-compliant systems.

Shielded Twisted-Pair Cabling (IBM)

Digital provides 802.3/Ethernet support over IBM Type 1 and Type 2 shielded twisted-pair cable utilizing the 10Base2 adapters. These adapters, one located in the office and the other in the ODF/HDF, convert ThinWire communications to the shielded twisted-pair communications and back again. The adapter products supply all required electrical and physical translation from active ThinWire devices such as DEMPR interconnect devices and PC Ethernet controller boards, providing a complete segment between the 802.3/Ethernet network and the office device via the shielded twisted-pair cabling.

Digital also provides IEEE 802.3 10BaseT support and EIA-423 support over IBM Type 1 and Type 2 cable through the use of baluns.

ThinWire 802.3/Ethernet Cabling

ThinWire is 50-ohm coaxial cable that was designed specifically for use with IEEE 802.3 10Base2 systems. ThinWire offers the following advantages over general-purpose unshielded twisted-pair cable:

- Greater bandwidth — data speeds out to 100 Mb/s
- Greater immunity to noise
- Supports greater operational distances of up to 185.0 m (606.8 ft) for 10 Mb/s data rates as well as 100.0 m (328.1 ft) for 100 Mb/s data rates
- Supports daisy-chaining — serial connection of devices with or without a faceplate

The *EIA/TIA-568 Commercial Building Wiring Standard* addresses the requirements of large networks. Administration and control of these large networks is facilitated by requiring individual cable runs in the horizontal between each office outlet connector and the wiring closet. For this reason, the *EIA/TIA-568 commercial Building Wiring Standard* does not allow behind-the-wall daisy-chaining for ThinWire.

In addition, the standard limits the allowed length of cable runs for all media in the horizontal to 100 meters (328 feet) or less. Within the structured environment of the *EIA/TIA-568 Commercial Building Wiring Standard*, the advantages of ThinWire versus typical data grade unshielded twisted-pair are, therefore, limited to greater bandwidth. (It will support both IEEE 802.3 10Base2 Ethernet as well as FDDI protocols and has greater immunity to noise.)

Traditional daisy-chained ThinWire can be effectively used as the backbone for small IEEE 802.3 10Base2 networks. It can also be combined with an EIA/TIA-568 compliant system to add flexibility to the wiring system. For instance, many devices and users could be daisy-chained from a single EIA/TIA-568 ThinWire outlet that is terminated in a lab, conference room, or classroom.

Traditional daisy-chained ThinWire allows stations or segments to be added, changed or moved easily by users. This flexibility means that traditional daisy-chained ThinWire segments do not provide the structure and permanence of either EIA/TIA-568 cabling or behind-the-wall ThinWire.

A traditional daisy-chained ThinWire segment is created with traditional daisy-chain components:

- H8223-00 T-connectors
- H8224-00 barrel connectors
- H8225-00 ThinWire terminators

A traditional daisy-chained ThinWire segment can be up to 185 meters (609 feet) and support up to 29 stations and one repeater connection.

When planning any network that will support IEEE 802.3 10Base2 Ethernet, the advantages of either behind-the-wall or traditional daisy-chaining are low cost per port and configuration flexibility. For smaller LANs or less structured environments, the ability to daisy-chain workstations on ThinWire can provide significant cost savings when implementing an IEEE 802.3 10Base2 network.

Behind-the-wall daisy-chaining is a compromise between the rigid rules of the EIA/TIA-568 and the free-form wiring allowed by traditional daisy-chained ThinWire. A behind-the-wall daisy-chained segment provides the safety and structure of permanent wiring, but allows up to eight stations to be connected to a single cable run and repeater port. Stations can be connected to or disconnected from the behind-the-wall daisy-chained segment without affecting other users on the segment or LAN.

A behind-the-wall daisy-chained segment is created using three special ThinWire components:

- H3114-AA ThinWire daisy-chain faceplate connectors
- H8225-AA ThinWire terminators
- BN24A daisy-chain office cables

The maximum allowed segment backbone (behind-the-wall cabling) is 125 meters (413 feet) and a maximum of eight daisy-chain connectors can be attached to any one segment.

OPEN DECconnect Components and Features

- *EIA/TIA 568 Commercial Building Wiring Standard* compliant structured cabling system comprised of industry-standard components for both fiber optic and copper-based systems.
- Multifunction, modular OPEN DECconnect communication outlets; one for flush wall mounting, and the other for surface mounting on modular office furniture.
- Industry-standard NEMA 19-inch cabinets and racks for housing active network hardware and cable patching/crossconnect components.
- EIA-423-A supports with EOS/ESD protection and EIA-232-D compatibility and EIA-422 interoperability.
- Broad range of 802.3/Ethernet supported:
  - Fiber optic
  - Unshielded twisted-pair

- ThinWire coaxial cable
- Shielded twisted-pair (IBM)
- Standard baseband
- Broadband coaxial
- Microwave

- OPEN DECconnect design and configuration alternatives provide:
  - Design flexibility
  - Non-disruptive change
  - Versatile growth plans
  - Simplicity of operation

Standard Thick Wire Coaxial Cabling

Digital will use thick wire coaxial cabling to add to existing thick wire backbones, or where the cost of fiber is not warranted.

Broadband

Digital supports broadband cabling through third-party vendors. ▲ Refer to Appendix D for information on broadband products.

EIA-423 Signaling

Digital's implementation of EIA-423-A signaling is based on the EIA-423-A standard for low-speed terminal connection. This implementation provides all the improved signaling benefits of EIA-423-A connection and is compatible with EIA-232 and interoperable with EIA-422.

This implementation was chosen as the signaling standard because of its improved performance over the EIA-232 standard, and its backwards compatibility with existing EIA-232-D equipment.

By following the EIA-423-A standard, Digital supports terminal-to-CPU or terminal server-to-terminal distances of 300 meters (1,000 feet), compared to the EIA-232-D standard of 15 meters (50 feet). It is fully compatible with all existing EIA-232 installations, making major equipment changes unnecessary. Digital provides necessary mechanical adapters that enable EIA-232-D (25-pin) terminals to plug into EIA-423-A (6-pin) communications controllers.

Digital's implementation of EIA-423-A has the following features:

- Industry-standard EIA-423-A signaling benefits, including CPU-to-terminal distances of up to 300 meters (1,000 feet) at 38.4 Kb/s.
- Complete electrical compatibility with EIA-232-D.
- Smaller 6-pin connector, which allows for increased line density at the back of the CPU and remote connection through the use of cable concentrators.
- Simplified cabling requirements with all cables having male connectors on both ends and female connectors being designed into all EIA-423-A devices, such as terminals.

Terminal Connections

The OPEN DECconnect communications system allows low-speed terminal users to migrate from EIA-232-D to EIA-423-A signaling. Digital offers the adapters, connectors, and cables to migrate EIA-232-D devices to Digital's implementation of EIA-423-A.

OPEN DECconnect Communication Outlets

The work area (or office) subsystem consists of the wiring needed to connect the work area equipment (desktop devices, servers, printers, etc.) to the horizontal wiring subsystem (HDF/ODF).

Digital's products for the work area subsystem are communications outlets that accept any combination of two types of inserts: blank or double opening. These inserts are snap-mounted into the wallbox or faceplate frame. The inserts accept snap-in connectors such as modular jacks (MJ) for telephones or data, and modified modular jacks (MMJ) for low-speed data transmission. A snap-in BNC (ThinWire) connector or video connectors can also be used. Snap-in inserts for the wallbox accommodate fiber connections for the FDDI connector and ST connector.

The features and benefits of the OPEN DECconnect work area subsystem include:

Features	Benefits
A modular communication outlet	Provides simplification of adds, moves, and changes
Accommodates multiple services and media choices for user's needs	Ease of installation and no wait time for service
Interchangeable parts	Allows wide application variety

OPEN DECconnect Modular Faceplate (H3111-C)

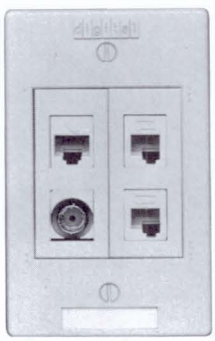

OPEN DECconnect Modular Wallbox (H3111-Gx)

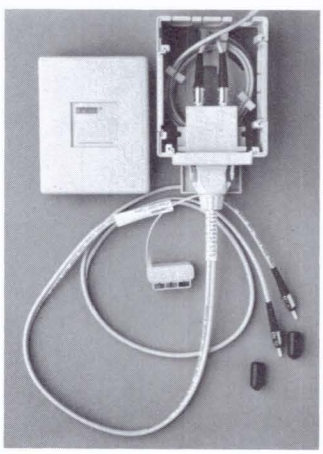

The communication outlets consist of faceplates and wallboxes. They are described as follows:

OPEN DECconnect Modular Faceplate (H3111-C)

Faceplate — Industry-standard form factor with four snap-in connectors for multiple combinations of voice and/or data.

- H3112–A/B/D (telephone)
- H3112–E/F (data — 8-pin MJ)
- H3112–G (data — 8-pin MJ/110)
- H3112–H (data shielded — 8-pin MJ/110)
- H3113–A (data — 6-pin MMJ)
- H3114–AA (daisy-chain)
- H3114–AB (BNC)
- H3115–AA (video/radio frequency)

OPEN DECconnect Modular Wallbox (H3111-Gx)

Modular office wallbox — Used for copper or fiber connections which include:

- H3112–A/B/D (telephone)
- H3112–E/F (data — 8-pin MJ)
- H3112–G (data — 8-pin MJ/110)
- H3112–H (data shielded — 8-pin MJ/110)
- H3113–A (data — 6-pin MMJ)
- H3114–AA (daisy-chain)

- H3114–AB (BNC)
- H3114–FE (fiber/FDDI)
- H3114–FF (fiber/ST)
- H3115–AA (video/radio frequency)

Office Faceplate Configuration

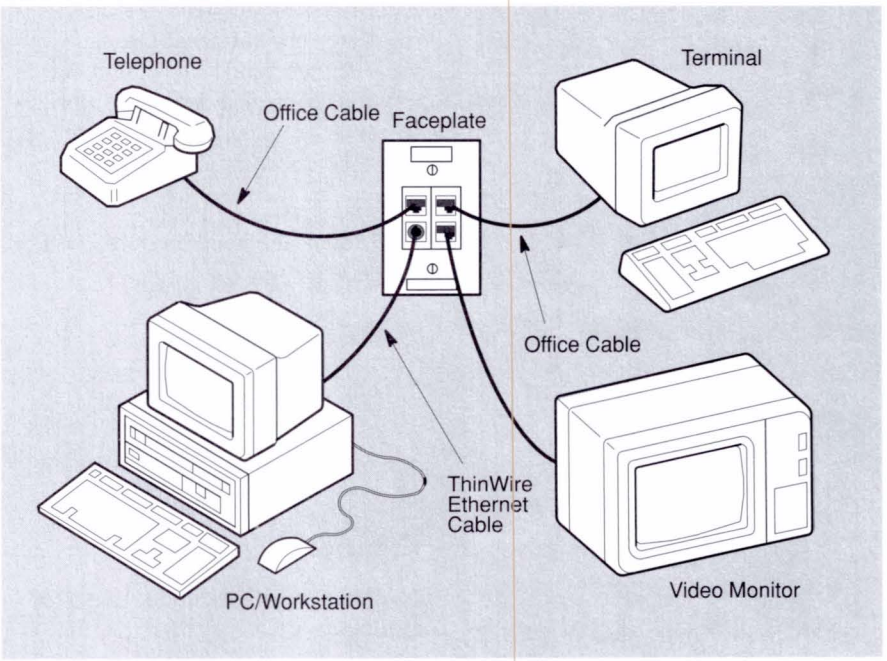

TBG-033-00

The specific order codes for these communications outlets are in the Fiber Optic and Horizontal Wiring sections.

H3111-C Modular Faceplate

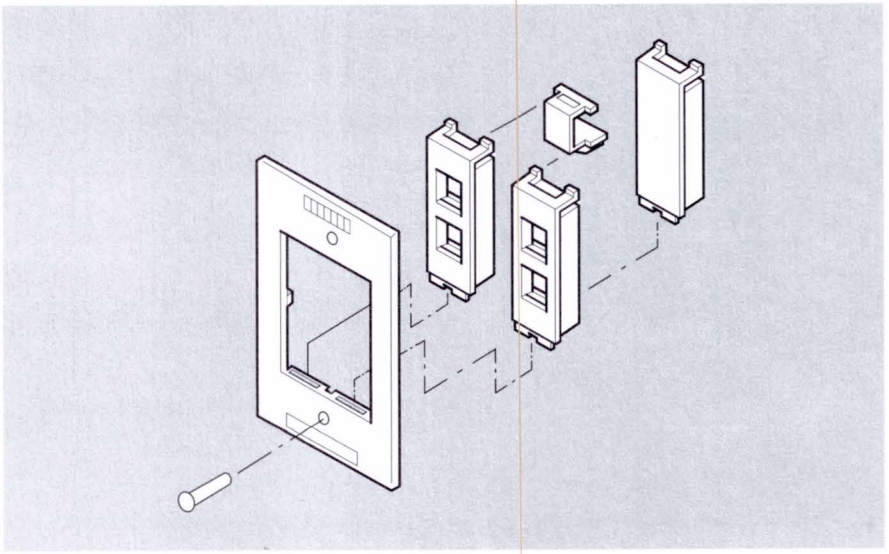

TBG-032-00

Fiber Optic OPEN DECconnect Products

Fiber Optic Cable Assemblies		
Description	**Order Code**	**Length**
FDDI × FDDI cable assembly with crossover (1 meter to connect FDDI-compatible devices where a transmit/receive crossover is required)	BN24B-01	1 m (3.28 ft)
	BN24B-03	3 m (9.84 ft)
	BN24B-4E	4.5 m (14.8 ft)
	BN24B-10	10 m (32.8 ft)
	BN24B-20	20 m (65.6 ft)
	BN24B-30	30 m (98.4 ft)
FDDI × 2.5 mm bayonet ST-connector cable assembly	BN24D-01	1 m (3.28 ft)
	BN24D-03	3 m (9.84 ft)
	BN24D-4E	4.5 m (13.5 ft)
	BN24D-10	10 m (32.8 ft)
	BN24D-20	20 m (60 ft)
	BN24D-30	30 m (98.4 ft)
Dual 2.5 mm bayonet ST-connector cable assembly	BN24E-01	1 m (3.28 ft)
	BN24E-03	3 m (9.84 ft)
	BN24E-4E	4.5 m (13.5 ft)
	BN24E-10	10 m (32.8 ft)
	BN24E-20	20 m (60 ft)
	BN24E-30	30 m (98.4 ft)

Component Order Codes

Option	Order Code
Communication Outlets and Office Cables	
Modular wallbox accepts all OPEN DECconnect snap-in inserts for fiber and copper connectors, quantity: 8, includes blank bezels and mounting hardware	H3111-GA
FDDI-to-dual 2.5 mm bayonet connector coupler snap-in 220 insert for the H3111-GA modular office wallbox, interface to FDDI-compatible devices, quantity: 8	H3114-FE
Dual 2.5 mm bayonet ST-connector coupler snap-in insert for the H3111-GA modular office wallbox, quantity: 8	H3114-FF
Enclosure Products	
Fiber splice shelf, rack mounting, 3 splice organizer trays with 72-splice capacity	H3107-G
Fiber storage shelf for preconnectorized cables or buffered cables, rack mounting, fiber routing rings to organize and provide strain relief for the fibers	H3107-H
Combination shelf for splicing and terminating 24 fibers for indoor or outdoor cables, 4 connector panels (each with 6-coupler capacity)	H3107-J
Termination shelf, rack mounting 72-fiber capacity for indoor or outdoor cables, installs 12 connector panel maximum (each with 6-coupler capacity)	H3107-K
Remote wall enclosure for fiber, 12 fiber capacity, 2 connector panels	H3131-C
Connectors and Couplers	
Field-installable 2.5 mm bayonet connector kit, quantity: 6	H3114-FA
2.5 mm bayonet ST-connector coupler kit, quantity: 12	H3114-FC
Preloaded coupler panels each with six, 2.5 mm bayonet ST-connector couplers, 2 panels per kit	H3114-FH
Splice Pigtails	
Splice pigtail with preconnectorized 2.5 mm bayonet ST-connector and 62.5/125 mm tight buffered 3-meter cable, quantity: 6	H3118-FA
Installation Tool Kits	
Mechanical splice tool kit to mount mechanical splices	H3114-FD
Kit of 12 mechanical splices to be used in conjunction with the H3114-FD mechanical splice tool kit, quantity: 12	H3114-FG
2.5 mm bayonet ST-connector termination tool kit includes all tools required to mount H3114-FA connectors	H8102-AA
2.5 mm bayonet ST-connector consumables kit to mount 100 bayonet ST-connectors	H8102-AB

Horizontal/Copper Wiring Products for Work Area and Horizontal Subsystems

Communications Outlets Product Order Codes	
Option	**Order Code**
OPEN DECconnect modular flush mount faceplates, package of 8	H3111-C
OPEN DECconnect modular office wallbox kit for copper or fiber connections, wallmountable, package of 8	H3111-GA (gray) H3111-GB (white) H3111-GC (ivory)
Modular jacks for AT&T phone connection, package of 8	H3112-A
Modular jacks for Northern Telecom, Rolm PBX phone connections, package of 8	H3112-B
Modular jacks for universal PBX telephone connections, package of 8	H3112-D
Modular jacks for data 8-pin communication, package of 8 (configured without data icon)	H3112-E
Modular jacks for data 8-pin communication, package of 8 (configured with data icon)	H3112-F
Snap-in jack with data icon. 110 punchdown to 8-pin MJ, kit of 8	H3112-G
Shielded snap-in jack, 110 punchdown to 8-pin MJ, kit of 8	H3112-H
Modified modular jacks for EIA-423-A signaling, package of 8	H3113-A
ThinWire Ethernet BNC bulkhead faceplate snap-in connectors for H3111-C and H3111-GA, package of 8	H3114-AB
F-style CATV video connectors, package of 8	H3115-AA
Cable Assemblies	
A ThinWire patch cable used to connect the BNC connector of a 10Base2 repeater to the patch field BNC connector, 3 m (10 ft) long.	BC16K-10
A crossconnect for an 8-pin MP DETPR 10BaseT repeater to existing DECconnect wiring, terminated with the 6-pin data MMJ both at the faceplate and wiring closet, 3 m (10 ft) long.	BC16U-10
Cable assembly, 0.5 m 8-pin MP to 8-pin MP, 26 AWG, 2 UTP with crossover for DETPR	BN24F-0E

Communications Outlets Product Order Codes (Continued)

Option	Order Code
Cable Assemblies (Continued)	
8-pin MP to 8-pin MP, two UTP office cable with crossover, 3 m (9.8 ft)	BN24F-03
8-pin MP to 8-pin MP, two UTP office cable with crossover, 4 m (13.1 ft)	BN24F-04
Cable assembly, 7 m 8-pin MP to 8-pin MP, 26 AWG, two UTP with crossover for DETPR	BN24F-07
Office cable to connect the 6-pin MMJ port of a terminal or printer to the 8-pin MJ faceplate outlet jack. Three twisted-pair cables configured with one 6-pin MMP , one standard 8-pin MP, and crossover pinning.	BN24H-03 (3 meters) BN24H-04 (4 meters)
BN24J equipment cable used to connect the 6-pin MMJ port of an RS423 server to the 8-pin MJ patch panel insert jack. Three twisted-pair cables configured with one 6-pin MMP and one standard 8-pin MP (pin-to-pin wiring).	BN24J-01 (1 meter) BN24J-03 (3 meters) BN24J-07 (7 meters)
Shielded 18 twisted-pair cables configured with one male 36-position right-angle connector and one male 50-position straight connector. Connects the 36-position port of a DECserver 200/DL or CXA16 terminal server to the 50-position port of the H3107-M patch panel insert, 3 m (10 ft).	BN24K-03
Equipment cable used to connect the 6-pin MMJ ports of an RS423 server such as the DECserver 300 to the 50-position port of the H3107-M patch panel insert. It is an octopus cable configured with eight 6-pin MMPs and one male 50-position straight connector, 3 m (10 ft).	BN24L-03
Equipment cable used to connect the 8-pin MJ ports of a 10BaseT server such as the DETPR to the 50-position port of the H3107-M patch panel insert. It is an octopus cable configured with 8-position standard modular plugs and one male 50-position straight connector, 3 m (10 ft).	BN24M-03
Equipment cable used to connect the 36-position port of DECserver 200/DL or CXA16 terminal server to the 8-pin MJ ports of the H3107-N patch panel insert. It is an octopus cable configured with 8-position standard modular plugs and one male 36-position right-angle connector.	BN24N-03
Cable assembly, 0.5 m 8-pin MP to 8-pin MP, 2AWG, two UTP pin-to-pin for 10BaseT	BN26K-0E

Communications Outlets Product Order Codes (Continued)

Option	Order Code
Cable Assemblies (Continued)	
Cable assembly, 3 m, 8-pin MP to 8-pin MP, 2 AWG, 2 UTP pin-to-pin for 10BaseT	BN26K-03
Cable assembly, 4 m, 8-pin MP to 8-pin MP, 2 AWG, 2 UTP pin-to-pin for 10BaseT	BN26K-04
Cable assembly, 7 m, 8-pin MP to 8-pin MP, 2 AWG, 2 UTP pin-to-pin for 10BaseT	BN26K-07
Cable assembly, shielded, 3 m, 8-pin MP to 8-pin MP, 2 AWG, 2 UTP pin-to-pin for 10BaseT	BN26L-03
Cable assembly, shielded, 4 m, 8-pin MP to 8-pin MP, 2 AWG, 2 UTP pin-to-pin for 10BaseT	BN26L-04
Cable assembly, shielded, 7 m, 8-pin MP to 8-pin MP, 2 AWG, 2 UTP pin-to-pin for 10BaseT	BN26L-07
Cable assembly, shielded, 3 m, 8-pin MP to 8-pin MP, 2 AWG, 2 STP for DETPR	BN26N-03
Cable assembly, shielded, 4 m, 8-pin MP to 8-pin MP, 2 AWG, 2 STP for DETPR	BN26N-04
Cable assembly, shielded, 7 m, 8-pin MP to 8-pin MP, 2 AWG, 2 STP for DETPR	BN26N-07
Patch Panels and Patching Cables	
Cable assembly, 0.5 m, 8-pin MP to 8-pin MP, 24 AWG, 4 UTP, pin-to-pin	BN25G-0E
Cable assembly, 1 m, 8-pin MP to 8-pin MP, 24 AWG, 4 UTP, pin-to-pin	BN25G-01
Cable assembly, 3 m, 8-pin MP to 8-pin MP, 24 AWG, 4 UTP, pin-to-pin	BN25G-03
Cable assembly, 4 m, 8-pin MP to 8-pin MP, 24 AWG, 4 UTP, pin-to-pin	BN25G-04
Cable assembly, 7 m, 8-pin MP to 8-pin MP, 24 AWG, 4 UTP, pin-to-pin	BN25G-07
Cable assembly, shielded, 0.5 m, 8-pin MP to 8-pin MP, 26 AWG, 4 STP, pin-to-pin	BN26M-0E
Cable assembly, shielded, 1 m, 8-pin MP to 8-pin MP, 26 AWG, 4 STP, pin-to-pin	BN26M-01
Cable assembly, shielded, 3 m, 8-pin MP to 8-pin MP, 26 AWG, 4 STP, pin-to-pin	BN26M-03

Communications Outlets Product Order Codes (Continued)	
Option	**Order Code**
Patch Panels and Patching Cables (Continued)	
Cable assembly, shielded, 4 m, 8-pin MP to 8-pin MP, 26 AWG, 4 STP, pin-to-pin	BN26M-04
Cable assembly, shielded, 7 m, 8-pin MP to 8-pin MP, 26 AWG, 4 STP, pin-to-pin	BN26M-07
Shielded patch panel insert, includes: – eight shielded connectors – two 4-position bezels	H3107-R
Patch panel insert, 2.5 mm bayonet coupler × 8	H3107-S
A patch panel insert for the H3108-BA patch panel frame, configured with 8-pin MJs connected to a 110-type punchdown block. Used to terminate (punch-down) building wiring from an office at the patch panel.	H3107-L
A patch panel insert for the H3108-BA patch panel frame, configured with 8-pin MJs connected to a 50-position telco-style connector. Used with an H3107-L to create a crossconnect field.	H3107-M
A patch panel insert for the H3108-BA patch panel frame, configured with rows of 8-pin MJs connected back-to-back, so as to act as a coupler. Used with an H3107-L to create a crossconnect field.	H3107-N
A patch panel insert for the H3108-BA patch panel frame, configured with eight female BNC couplers. Used to interconnect ThinWire cables terminated with male BNC connectors.	H3107-P
A patch panel frame that can support up to six panel inserts (H3107-L, M, N or P), thus up to 48 connections.	H3108-BA
Physical Specifications	
Height 8.9 cm (3.5 in) Width 44.5 cm (17.5 in) Depth 5.71 cm (2.25 in)	
With brackets supplied, the H3108-BA can be flush- or recess-mounted to standard 19-inch RETMA racks.	
A kit of five blank inserts for the H3108-BA patch panel frame.	H3108-CA
Patch panel frame, one piece, flush mount	H3108-DA
Cable management bracket, flush mount	H3108-EA
Strain relief bracket kit for H3108-type patch panels	H3108-FA
Adapter plate: adapts three H3107-L/S inserts, for use in SER/OCC racks	H3108-GA

Communications Outlets Product Order Codes, Continued

Option	Order Code
Installation Tools	
A punchdown tool for the 110-type punchdown blocks specified for the H3107-L panel insert.	H8100-C
A small barrel punchdown tool used with H3112 and H3113 phone and data jacks.	H8100-D
A crimp tool for ThinWire cable and BNC connectors.	H8100-E
8-position crimp die for H8241/H100-G crimp tool.	H8100-F
Crimp tool and die set for 8-position MP	H8100-G

OPEN DECconnect Optional Connectors

Daisy-Chain Connector Tap

The OPEN DECconnect Daisy-Chain Connector Tap (H3114-AA) assembly provides structured cabling support for serial-connection of workstations behind the wall. Workstations or PCs are connected to the daisy-chain connector tap with daisy-chain connector cables BN24A-2E, 2.5 meters (8.2 feet), or BN24A-3E, 3.6 meters (12 feet) which comprise two separate ThinWire cables in a single sheath with single connectors. Up to eight workstations can be supported on a single segment of ThinWire coaxial cable. Designed specifically for use with the OPEN DECconnect Modular Faceplate H3111-C, the tap uses the snap-in feature of the faceplate. Each daisy-chain tap assembly uses two of the faceplate's four connector positions.

The daisy-chain connector allows workstations to be connected or disconnected from the LAN without disrupting the network or disconnecting downline nodes. Each daisy-chained segment must be terminated with a 50-ohm daisy-chain terminator, installed after the final daisy-chain tap assembly. Maximum distance for ThinWire behind the wall (excluding the daisy-chain connector cables) is 125 meters (410 feet). T-Connectors are not used with daisy-chain connectors.

Tap components are sold in packages of eight. Cables are sold individually.

Video Connector

The H3115-AA Video Connector provides snap-in video connections for the OPEN DECconnect Modular Faceplate H3111-C. Combined with the H3111-C, the new H3115-AA provides the same video capabilities as the H3111-A/B (non-modular) DECconnect faceplate, allowing flexibility for users who require video connectivity in a structured cabling environment.

For applications such as teleconferencing, medical video networks, or security, OPEN DECconnect provides a structured cabling solution that includes integrated video connectivity. The snap-in video connector allows users to choose the services they wish to include with video in a modular manner.

OPEN DECconnect Terminal-Connection Components

OPEN DECconnect terminal-connection components are the cables, connectors, and adapters used to link terminals, terminal servers, and computer hosts within the OPEN DECconnect communications system. Low-speed terminal communication in the OPEN DECconnect system uses the EIA-423-A signaling standard. The Digital products enhance the industry-standard EIA-232-D performance by:

- Improving transmission speed
- Increasing the distance that terminals can be located from host computers
- Incorporating EOS/ESD protection

Digital offers the following products to connect devices using the EIA-423-A signaling standard and to adapt devices from EIA-232-D signaling to EIA-423-A signaling.

H8575-A



- Digital office cable — The EIA-423-A standard office cable (BC16E), an unshielded 6-conductor flat cable. The BC16E cable is terminated with a modified modular plug (MMP) that has an offset key to prevent it from being accidentally plugged into the telephone jack.

H8575-B



- Modified modular plug — The EIA-423-A standard connector. To connect MMPs into existing terminals and printers, passive physical adapters are required. Passive adapters allow both EIA-232 and EIA-423-A signaling to pass through. However, EIA-423-A devices, when connected to EIA-232-D wiring, are limited to EIA-232-D signaling parameters. Each passive adapter has a modified modular jack (MMJ) to receive the MMP.
- H8575-A adapter (25-pin D-subminiature) — Required for terminal connection.
- H8575-B adapter (9-pin D-subminiature) — Required for printer connection.

H8572



- H3105 active converter — Allows customers to upgrade an EIA-232-D device to EIA-423-A and realize all the benefits of increased distance and EOS/ESD protection. As opposed to the passive adapters, which provide only a mechanical adaptation, the H3105 active converter transforms the electrical signal from an EIA-232-D interface to the signal for a EIA-423-A interface, thus allowing longer distances and better noise immunity.
- H8572 cable extender (6-conductor) — Used to extend the length of two MMP-preterminated cables.

Office Configuration with Passive Adapters

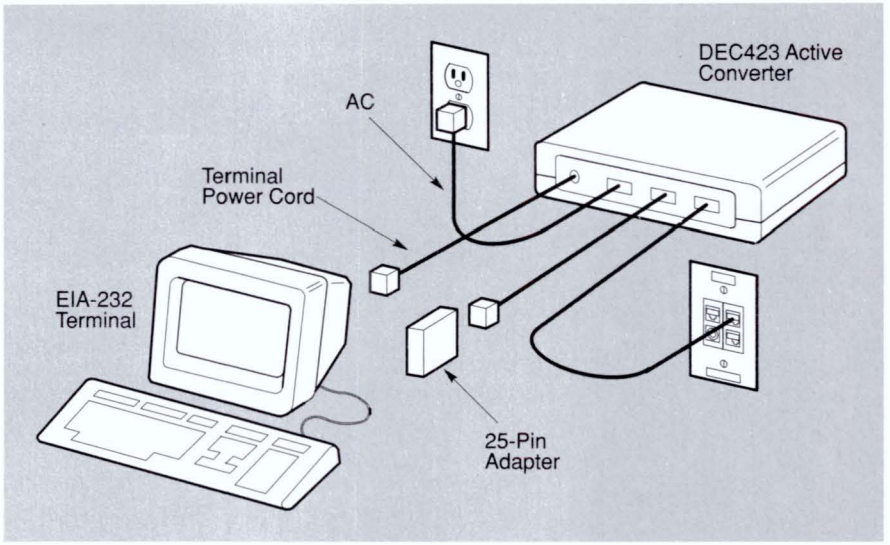

TBG-034-00

Office Configuration with Active Converter

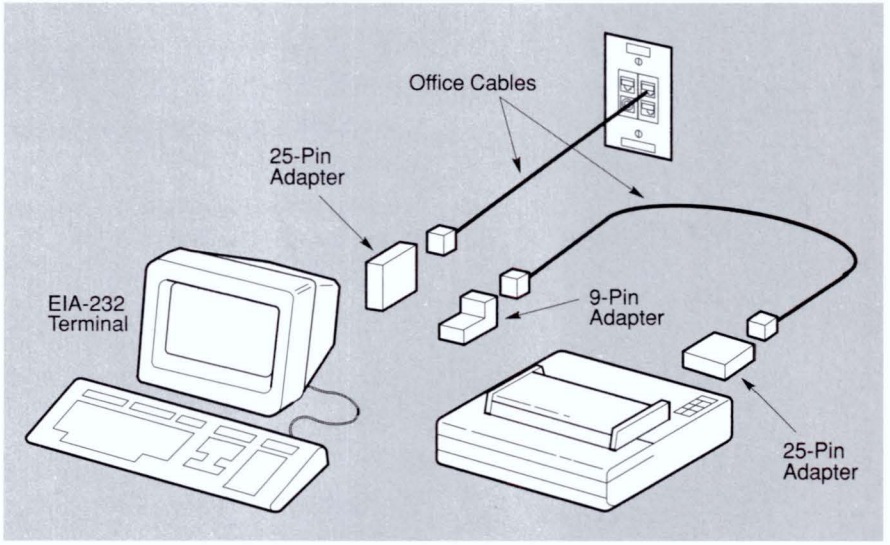

TBG-035-00

Terminal-Connection Product Order Codes	
Option	**Order Code**
6-conductor EIA-423-A office cable terminated with MMPs (Refer to the section, "Communications Cables" for cable lengths.)	BC16E-xx
25-pin active converter, 110 V	H3105-A
25-pin active converter, 220/240 V	H3105-B
Package of 50 MMPs for 6-conductor office cable	H8220
8-pin connector for round stranded cable, kit of 50	H8226-AA
Shielded 8-pin connector for round stranded cable, kit of 50	H826-AB
1,000-foot spool of unterminated, 6-conductor, flat office cable	H8240
Crimp tool for 6-conductor cable	H8241
6-conductor cable extender	H5872
25-pin passive adapter (EIA-232-D female)	H8575-A
25-pin passive adapter (EIA-232-D male)	H8575-D
9-pin passive adapter	H8575-B
Building Wire	
Unshielded twisted-pair, high-performance 100 ohm PVC, stranded wire reel, 24 AWG, 1,000 ft	H8240-A
Shielded twisted-pair, high-performance 100 ohm PVC, stranded wire reel, 24 AWG, 1,000 ft	H8240-B
Unshielded twisted-pair, high-performance 100 ohm PVC, solid wire reel, 24 AWG, 1,000 ft	H8245-C
Shielded twisted-pair, high-performance 100 ohm PVC, solid wire reel, 24 AWG, 1,000 ft	H8245-D
Unshielded twisted-pair, high-performance 100 ohm plenum, solid wire reel, 24 AWG, 1,000 ft	H8246-C
Shielded twisted-pair, high-performance 100 ohm plenum, solid wire reel, 24 AWG, 1,000 ft	H8246-D

Services from Network Integration Services

As part of Digital's commitment to meet the total needs of its customers, the Network Integration Services (NIS) group provides a full set of services needed throughout the process of planning, implementing, and operating a network. Services available during the network design and implementation phases include:

- DECsite I — Includes analysis of the computer environment and data communications cabling needs from the perspective of operations, equipment, available space, building services, and future expansion. Digital provides the engineering analysis and budget estimates needed to decide what to build, when, and why.
- DECsite II — Includes delivery of detailed construction drawings, specifications, and wire lists. DECsite II design documents can be used by the customer to build the facility.
- DECsite III — Includes delivery of the finished facility. DECsite personnel serve as the single source for the entire project, providing complete project management.

WorkGroup Family of Networking Products

Digital's WorkGroup Family of Networking Products are designed to snap into the DEChub 90 to support the communication needs of today's work groups in small to mid-size companies, as well as to expand workgroup communications in a corporate enterprise-wide network. The WorkGroup LAN products include

- The DEChub 90 is a multifunction Ethernet backplane that provides mounting, power, and connections for up to eight WorkGroup networking devices. ▲ Refer to the "DEChub 90" description in this section for more information.
- DECserver 90TL is designed for high-speed asynchronous connections to UNIX, ULTRIX, VMS, DOS, and multivendor network services. This 8-port multisession Telnet/LAT terminal server offers industry-standard connections at speeds up to 57.6 Kb/s. It supports TCP/IP, Telnet, LAT, and SLIP protocols and several remote management systems. It can be used standalone for small workgroups, or combined with other modules in the DEChub 90 to connect dozens of terminals, printers, and PCs to large enterprise networks. ▲ Refer to the "DECserver 90TL" description in this section for more information.
- The DECserver 90L+ is a feature-enhanced LAT terminal server for 802.3/Ethernet local area networks. This compact modular terminal server can be used as a standalone unit or combined with other WorkGroup products in the DEChub 90. ▲ Refer to the "DECserver 90L+" description in this section for more information.
- The DECbridge 90 is a compact, low-cost, protocol-independent bridge that connects and isolates workgroups from the larger LAN backbone. The DECbridge 90 can be used in both structured and unstructured workgroup environments. The DECbridge 90 supports a maximum of 200 nodes on the workgroup side. ▲ Refer to the "DECbridge 90" description in this section for more information.
- The DECrepeater 90T is a compact 8-port repeater that connects PCs and workstations to a 10BaseT Ethernet LAN. It can function as a standalone unit or be snapped into a DEChub 90. ▲ Refer to the "DECrepeater 90C" description in this section for more information.
- The DECrepeater 90C is a compact, 6-port repeater that connects PCs and workstations to a ThinWire 802.3/Ethernet LAN. The DECrepeater 90C can function as a standalone unit or can be snapped into a DEChub 90. ▲ Refer to the "DECrepeater 90C" description in this section for more information.
- DECagent 90 and HUBwatch is Digital's hub management solution. It has the flexibility to manage multiple hubs with a single module that works both inside and outside of the hub. One DECagent 90 can manage up to four interconnected hubs. Up to 480 10BaseT repeater ports can be managed by a single DECagent 90. The ability to use the DECagent 90 as a standalone unit frees up a slot in the hub. ▲ Refer to the "DECagent 90 and HUBwatch" description in this section for more information.

DEChub 90

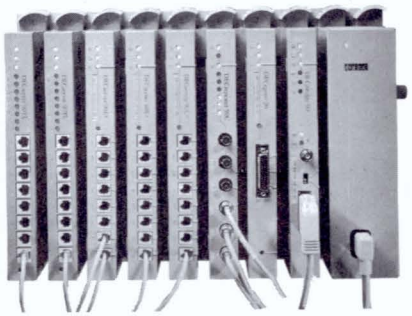

The DEChub 90 is a multifunction Ethernet backplane that provides mounting, power, and ThinWire connections for up to eight WorkGroup Family modules. It is designed to support the communication needs of today's work groups in small to mid-size companies, as well as to expand workgroup communications in a corporate enterprise-wide network.

The WorkGroup Family server, bridge, repeater, and management modules can be installed or removed with the power on, and snapped into place in the DE-Chub90. This hot swap feature allows for upgrades, modifications, or replacement without interruption to other users on the network.

The DEChub 90 can be installed in a 19-inch equipment rack or mounted on a wall. When combined with the DEHUX wall mount plate and cover, the unit becomes a small telecommunications center. This configuration provides mounting for the DEChub 90 backplane and OPEN DECconnect patch panels.

The DEChub 90 provides an integral BNC port for connecting the hub to a ThinWire Ethernet backbone. And, any DEChub 90 configuration that includes a DECbridge 90 can connect to the Ethernet backbone using the standard AUI connector on the bridge. Two DEChub 90s can be interconnected together with ThinWire. A single bridge can be used to connect both hubs to an Ethernet backbone.

Features

- Modular, multifunction hub that serves as a mini-telecommunications center.
- User installable on office walls or in 19-inch racks.
- Supports easy installation, management, and hot swapping of modules.

Specifications	
Mounting Area	
Height	30.5 cm (12.0 in)
Width	44.5 cm (17.5 in)
Depth (excluding cables)	16.5 cm (6.5 in)
Power Requirements	
Nominal voltage	120 V or 240 V (power supply will autoselect correct voltage range)
Frequency	47 Hz to 63 Hz
Input current	3.8 A at 120 V, 1.9 A at 240 V
Maximum power	90 W
Operating Environment	
Temperature	5° C to 50° C (41° F to 122° F)
Relative humidity	10% to 95% (noncondensing)

Ordering Information

The DEChub 90 includes an H7876-AA power supply, rackmount brackets, and BC16M-06 ThinWire cable. ▲ For more information, contact your local Digital sales office.

DEChub 90 Order Codes

Option	Order Code
DEChub 90	DEHUB-**
Cover assembly (includes cover and wallmount bracket)	DEHUX-AA

** Replace the ** with one of the following codes: BA (United States, Canada, Japan), BD (Denmark), BE (United Kingdom), BI (Italy), BK (Switzerland), BT (Israel), BZ (Australia, New Zealand), CB (Central Europe), CJ (India, S. Africa)

DECagent 90
HUBwatch for Windows
HUBwatch for DECmcc MSU



With the SNMP-based DECagent 90 and HUBwatch software, the WorkGroup Family of Networking Products will be manageable through an easy-to-use, graphical interface on a choice of management platforms.

Management is accomplished using the DECagent 90 hardware module with PC- or workstation-based HUBwatch software. Both hardware and software are required for graphical management of modules in the DEChub 90. The DECagent 90 is in the same form factor as other WorkGroup Family modules.

Only Digital's hub management solution has the flexibility to manage multiple hubs with a single module that works both inside and outside of the hub. One DECagent 90 can manage up to four interconnected hubs. Up to 480 10BaseT repeater ports can be managed by a single DECagent 90. The ability to use the DECagent 90 as a standalone unit frees up a slot in the hub.

HUBwatch products feature powerful graphical interfaces that translate SNMP messages into easy-to-grasp illustrations of the modules in the DEChub 90. A PC or workstation mouse can be used to navigate through the software to configure, monitor, and control WorkGroup Family modules down to the individual port level.

Digital's HUBwatch products offer a choice of network management platforms. The PC-based solution is HUBwatch for Windows. This low-cost, easy-to-use software is used to manage DEChub 90 modules. The powerful, advanced features of HUBwatch for DECmcc MSU (Management Station for ULTRIX) are used to manage DEChub 90 modules and IP and DECnet Phase IV networks. This product is designed for use in ULTRIX, Motif-based workstation environments.

Comparison of HUBwatch Software		
	HUBwatch for Windows	**HUBwatch for DECmcc MSU**
Manages	DEChub 90 modules only	DEChub 90 modules plus IP networks with some DECnet and DECnet Phase IV networks
Hardware Platform	386 PC or higher*	RISC or VAX system (workstation recommended)
Software Platform	Windows V3.0	DECmcc MSU V1.1
* A 25 MHz machine is recommended for optimum performance, but HUBwatch for Windows will run on a lower performance 386 machine.		

The DECagent 90 protects against network downtime in a number of ways. It is designed to eliminate the management module as a single point of failure. If this module fails, only the management function is affected, not the operation of the whole hub. It also features an out-of-band (RS-232) port with a graphical interface to allow management of an isolated hub if portions of the network fail.

Features

- Easy-to-use graphical SNMP-based management solutions for WorkGroup Family modules.
- Manages down to the individual port level; manages multiple hubs with a single management module; manages selected modules (DECbridge 90, DECserver 90L, and DECserver 90L+) in standalone mode.
- Used standalone or in the DEChub 90.
- No single point of failure.
- Out-of-band RS-232 port.

DECagent 90 Specifications	
Dimensions	
Height	27.9 cm (11.0 in)
Width	3.2 cm (1.3 in)
Depth	14.0 cm (5.5 in)
Weight	0.77 kg (1.7 lbs) (without power supply)
Environmental Class	C (Refer to Appendix C for details)

Configuration Recommendations

- Use one DECagent 90 per four double (interconnected) hubs* on the same LAN.
- A DECbridge 90 must be in slot 7 or 8 of the hub* in order to manage WorkGroup Family repeaters.

*__Note:__ Two hubs that are interconnected count as one combined hub.

Ordering Information

Both the DECagent 90 and a HUBwatch product are needed to graphically manage modules in the DEChub 90.

DECagent 90 and HUBwatch Order Codes	
Option	**Order Code**
DECagent 90 for Standalone Use	
DECagent 90 (includes power supply)	DENMA-**
Hub-based DECagent 90	
DECagent 90	DENMA-MA
HUBwatch Software	
HUBwatch for Windows V3.0 (includes documentation, media on 3.5 in diskette, and license)	QB-MQDAW-AA
HUBwatch for DECmcc MSU V1.1 RISC media kit	QA-MMAAA-H5
HUBwatch for DECmcc MSU V1.1 RISC license	QL-MMAA8-AA
HUBwatch for DECmcc MSU V1.1 RISC documentation	QA-MMAAA-GZ
HUBwatch for DECmcc MSU V1.1 VAX media kit	QA-MMBAA-H5
HUBwatch for DECmcc MSU V1.1 VAX license	QL-MMBA9-AA
HUBwatch for DECmcc MSU V1.1 VAX documentation	QA-MMBAA-GZ
To convert the hub-based model to standalone model:	
Power supply (120V/240V)	H7827-AA
Rear cover for the DECagent 90	H0342-AA
** Replace the ** with one of the following codes: AA (United States, Canada, Japan), AD (Denmark), AE (United Kingdom), AI (Italy), AK (Switzerland), AT (Israel), AX (Central Europe), AZ (Australia, New Zealand), BJ (India, S. Africa)	

Note: For HUBwatch for DECmcc MSU, both the media kit and license are required.

Fiber Optic Ethernet System

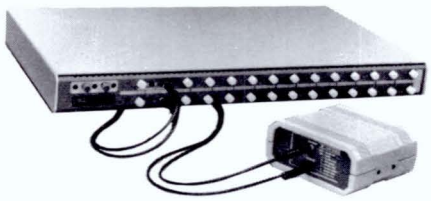

This fiber optic 802.3/Ethernet system provides the capability for distributing an Ethernet backbone over a structured fiber optic cabling system, eliminating the need for baseband coaxial cable. Structured cabling for fiber often means that the network is distributed over a star or radial topology. Star topology differs from traditional Ethernet bus topology by allowing the Ethernet backbone to fan out from multiport, active network hub(s) to other hubs within a building, or to hubs located in other buildings that might be within a campus complex.

The fiber optic Ethernet system comprises two components: a fiber optic multiport star (hub) transceiver with either 8 or 14 ports, and a fiber-to-copper transceiver. The products, manufactured by Chipcom Corporation, a Digital strategic partner, are sold by Digital's Customer Services organization under the Chipcom label.

These products operate over 62.5/125 micron fiber, using ST-type connectors (the same fiber types endorsed by the both the ANSI FDDI and EIA Building Wiring committees). Digital recommends that customers install the dual-window version of this fiber, which is optimized for both Ethernet and FDDI applications. Other fiber types (i.e., 50/125) are not recommended because they restrict operating distances and possible future FDDI implementation.

A properly configured system, implemented on a structured fiber optic cabling system consisting of 62.5/125 micron fiber, supports maximum distances of 1.5 km (4,910 feet) between a star and a fiber transceiver.

Digital does not currently offer either the cable or connectors through traditional sales channels, such as DECdirect; however, all these products are available through Digital's Customer Services Network and Site Services, as well as through authorized distributors such as Anixter Bros., Inc. ▲ Refer to "Fiber Optic Cables," elsewhere in this section, for cable specifications.

Features

- Connects to both IEEE 802.3 and Ethernet V2.0 copper-based products, ensuring backward compatibility of products and protection against obsolescence.
- 100% CSMA/CD (collision detection) performance guarantees maximum network efficiency and data integrity.
- Extensive link- and media-level LEDs allow diagnosis of any local and/or remote media- and hardware-related problems from a single location.
- Products are optimized around EIA/ANSI committees' industry-endorsed, 62.5 micron fiber standards, assuring Ethernet investment protection and a guaranteed growth path to FDDI.
- Architecture eliminates the requirement of using repeater devices for interconnection of active fiber stars. This simplifies the connection of a fiber backbone to many copper-based LANs, which can already have the maximum number of allowable repeaters per network.
- Backup fan and optional power supply maximize network uptime.

Specifications		
Physical Characteristics		
	Active Star	**Fiber Optic Transceiver**
Height	4.3 cm (1.7 in)	5.3 cm (2.1 in)
Width	43.9 cm (17.3 in)	9.6 cm (3.8 in)
Depth	25.4 cm (10.0 in)	10.2 cm (4 in)
Weight	3.63 kg (8 lb)	0.454 kg (1 lb)
Power Requirements	85 to 132 Vac or 187 to 265 Vac	12 to 15 Vdc ± 10%
Frequency tolerance	47/63 Hz	N/A
Maximum ac watts drawn	36 W	N/A

Ordering Information

▲ Consult your local Digital Customer Services Network Site Services representative for these products and complete fiber optic network services.

Fiber Optic Ethernet System

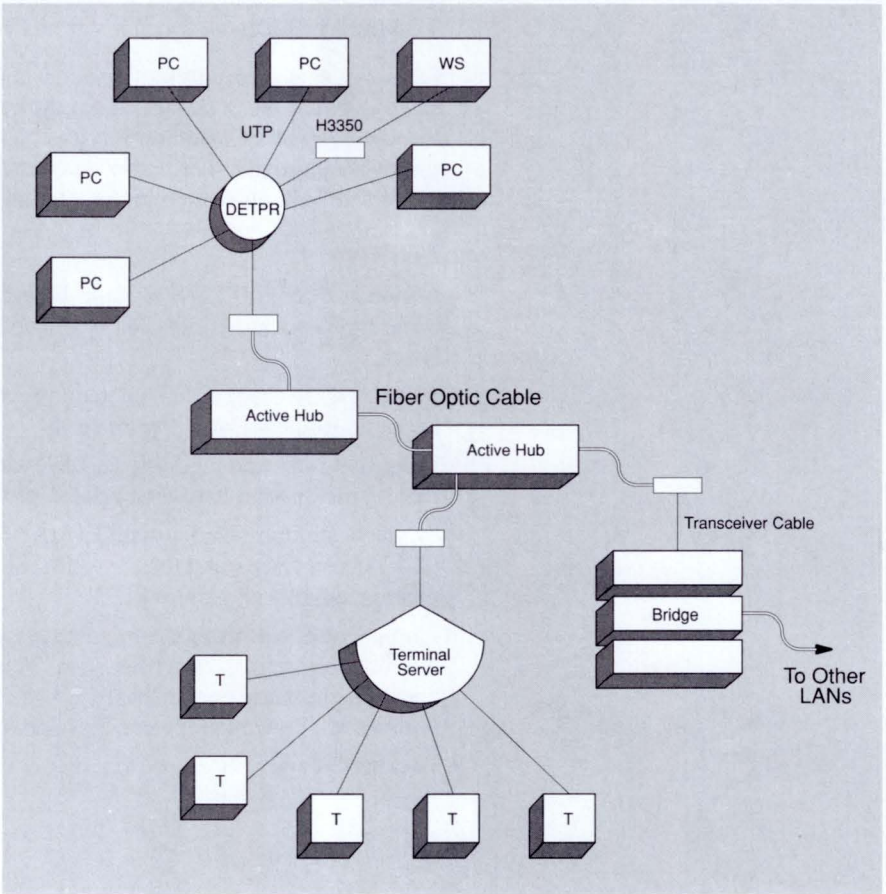

TBG-037-00

802.3 Ethernet communications controllers are interfaces that connect systems to an 802.3/Ethernet local area network. Digital currently offers the following system and 802.5/Token Ring communications controllers.

System Controllers

Digital's system controllers include the following:

- **DEBNA** — Connects VAXBI systems to standard baseband or broadband cable.
- **DELQA** — Connects Q-bus MicroVAX and MicroPDP-11 systems to standard baseband or broadband cable.
- **DESQA** — Connects Q-bus MicroVAX and MicroPDP-11 systems in BA200-series enclosures to standard baseband or ThinWire 802.3/Ethernet cable.
- **DELUA** — Connects UNIBUS VAX and PDP-11 systems to standard baseband or broadband cable.
- **DESVA** — Connects MicroVAX 2000 and VAXstation 2000 systems to ThinWire, standard baseband, or broadband cable.

  Controllers designed for standard baseband cable connect to the cable with a standard baseband 802.3/Ethernet transceiver or via a Local Network Interconnect (DELNI). They connect to broadband cable with a broadband transceiver. They can connect to unshielded twisted-pair cable via an H3350 10BaseT transceiver.

  Controllers designed for ThinWire 802.3/Ethernet cable connect to the cable via a BNC connector. They can connect to standard baseband cable via a ThinWire Ethernet repeater, which then connects to standard baseband cable via an 802.3/Ethernet transceiver or DELNI.

802.5/Token Ring Controller

- **DEQRA** — A Q-bus adapter that enables MicroVAX/VAXserver 3xxx and VAX/VAXserver 4000 systems to connect to a 4 or 16 Mb/s 802.5/Token Ring network.

802.3/Ethernet Communications Controllers

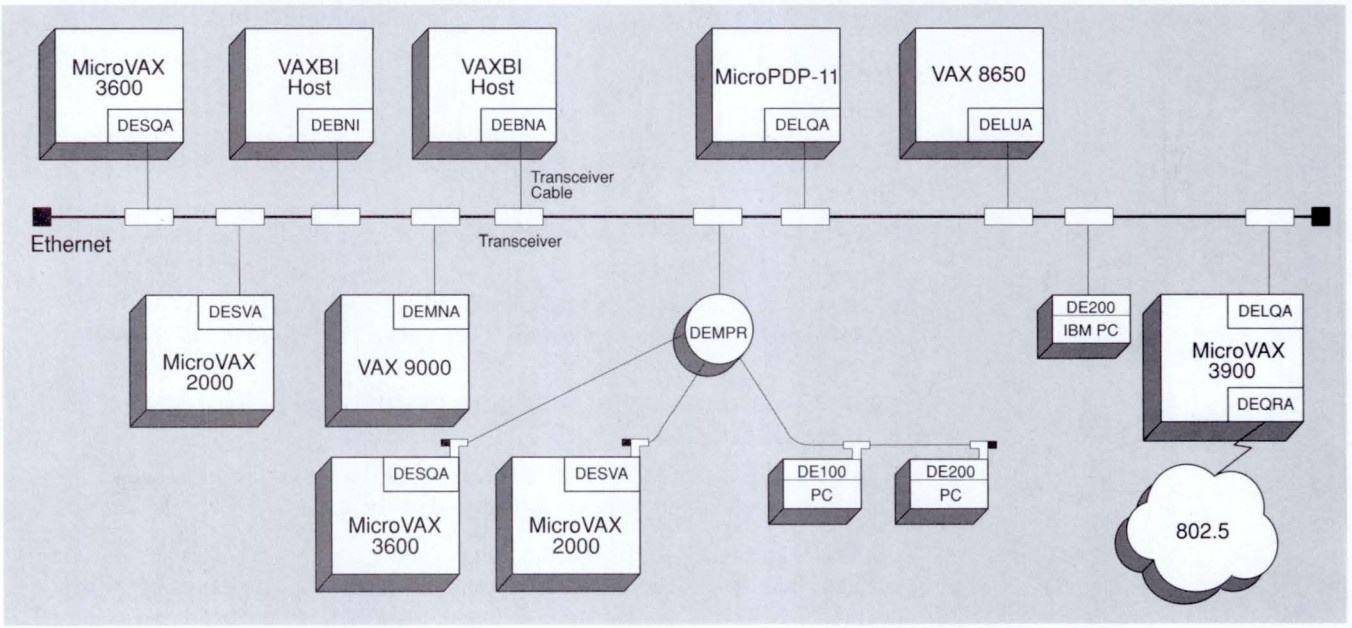

TBG-038-00

802.3/Ethernet Communications Controllers

	DEBNA	DELUA	DELQA	DESQA	DESVA
Bus	VAXBI	UNIBUS	Q-bus	Q-bus systems in BA200-series enclosures	MicroVAX 2000 and VAXstation 2000 bus
Number of Lines	1	1	1	1	1
DMA	Yes	Yes	Yes	Yes	Yes
Maximum Speed[1]	5 Mb/s	10 Mb/s	10 Mb/s	10 Mb/s	10 Mb/s
Ethernet Cable	Standard	Standard	Standard	Standard or ThinWire	Standard or ThinWire
DECnet Support	DECnet-VAX[2], DECnet-ULTRIX	DECnet-VAX[2], DECnet-ULTRIX, DECnet-RSX, DECnet/E	DECnet-VAX[2], DECnet-ULTRIX, DECnet-RSX, DECnet/E	DECnet-VAX[2], DECnet-ULTRIX, DECnet-RSX, DECnet/E	DECnet-VAX[2], DECnet-ULTRIX
Operating System Support	VMS, ULTRIX	VMS, ULTRIX, RSX-11m-PLUS, RSX-11S, RSTS/E	VMS, ULTRIX, RSX-11M, RSX-11M-PLUS, RSX-11S, RSTS/E, VAXELN	VMS, ULTRIX, RSX-11M, RSX-11M-PLUS, RSX-11S, RSTS/E, VAXELN	VMS, ULTRIX

802.3/Ethernet Communications Controller (Continued)		
	DEBNI	**DEMNA**
Bus	VAXBI	XMI
Number of Lines	1	1
DMA	Yes	Yes
Maximum Speed[1]	10 Mb/s	10 Mb/s
Ethernet Cable	Standard	Standard
DECnet Support	DECnet-VAX[2], DECnet-ULTRIX	DECnet-VAX[2], DECnet-ULTRIX
Operating System Support	VMS, ULTRIX	VMS, ULTRIX

[1]Consult the appropriate DECnet Software Product Description for more information.

[2]DECnet-VAX allows multiple 802.3/Ethernet controllers per host within the limitations listed in the Load Unit Table in Software Product Description 25.03. When two or more 802.3/Ethernet controllers are used on a single CPU, they must be connected to different cables attached to separate local area networks. These cables must not be joined by a bridge or repeater, though they may be joined by a DECnet router.

802.3/Token Ring Controller	
	DEQRA
Bus	Q-bus
Number of Lines	1
DMA	Yes
Maximum Speed	16 Mb/s
Token Ring Cable	STP
DECnet Support	DECnet-VAX
Operating System Support	VMS

Digital Ethernet VAXBI to NI Adapter (DEBNA)

The DEBNA is an 802.3/Ethernet-to-VAXBI communications controller that connects VAXBI systems to an 802.3/Ethernet local area network. The DEBNA also allows a VAXBI system to be used as a boot member in a Local Area VAXcluster (LAVC). (The number of satellite nodes that can be supported varies by system.) One DEBNA is a standard component of each VAXBI system.

The DEBNA is a single VAXBI module that supports the physical and data link communications layers. It operates at speeds up to 5 Mb/s peak hardware throughput. (Actual throughput depends on system configuration, packet sizes, and application.)

Multiple DEBNA controllers can be added for control of multiple local area networks. Each DEBNA must be connected to a separate LAN, except when two controllers are connected to the same LAN with one on standby. The maximum number of DEBNA controllers allowed per system depends on available system dc power, available backplane space, and the following system limits.

- VAX 87xx/88xx systems may have a maximum of three DEBNA controllers per VAXBI channel and a maximum of four DEBNA controllers per system. Four DEBNA controllers on internal VAXBI channels may connect to the standard baseband cable with transceivers or a DELNI. DEBNA controllers on external VAXBI channels must connect through a DELNI.
- VAX 85xx systems may have a maximum of three DEBNA controllers per VAXBI channel and a maximum of four DEBNA controllers per system. No more than two DEBNA controllers on internal VAXBI channels may connect to the standard baseband cable through a transceiver. External VAXBI channels allow only one standard 802.3/Ethernet transceiver connection per channel. Additional connections must be through a DELNI.
- VAX 82xx/83xx Configuration 2 systems may have a maximum of two DEBNA controllers per system. Both DEBNA controllers may be connected to the standard baseband cable using the transceiver or DELNI.
- VAX 82xx/83xx Configuration 1 systems may have a maximum of two DEBNA controllers per system. The standard 802.3/Ethernet transceiver may be used to connect one controller to the standard baseband cable; the other connection must be made through a DELNI.

For VAXBI systems that include a UNIBUS, the maximum number of combined UNIBUS and VAXBI 802.3/Ethernet controllers per system cannot exceed the maximum numbers listed above.

Specifications	
Mounting Code	One VAXBI Slot
Power Requirements	
dc amps drawn at 5 Vdc	6.72 A
dc amps drawn at 5 Vdc	0.5 A (CK-DEBNA-LJ)
I/O Panel Units	One for CK-DEBNA-LJ; two for -LM, -LN

DEBNA Order Codes	
Option	**Order Code**
VAXBI 802.3/Ethernet controller, includes base module only	DEBNA-M
For system installation, select one of the following cabinet kits, that include an internal 802.3/Ethernet cable, an I/O connector panel, and a boot-enable jumper for 802.3/Ethernet:	
Cabinet kit for use with VAX 88xx, 87xx, 8550 internal VAXBI channels	CK-DEBNA-LJ
Cabinet kit for use with VAX 88xx, 87xx, 8550 and 8350 external VAXBI channels	CK-DEBNA-LN
Cabinet kit for use with VAX 8350 and 8250	CK-DEBNA-LM

DEC LAN Controller 200 (DEBNI)

The DEBNI is a performance enhancement to the DEBNA module, the VAXBI-to-Ethernet adapter; it is available as a module or as a ROM-upgrade for the DEBNA.

This high-performance communications controller connects VAXBI systems to both Ethernet V2.0 and IEEE 802.3 local area networks. DEBNI also supports VAXBI-based systems operating as a boot member in Local Area VAXcluster (LAVC) systems.

The DEC LAN Controller 200 firmware includes a console program that enables a user at virtually any terminal on the network to monitor DEBNI operation and network utilization. The console is invoked with the NCP CONNECT command from any node on the LAN.

Specifications

The DEC LAN Controller 200 has the same power requirements and uses the same cabinet kits as the DEBNA. Refer to that product description for specifications.

Ordering Information

The DEC LAN Controller 200 can be connected to either baseband or broadband Ethernet. It connects to the network via a transceiver cable (BNE3x or BNE4x) and a network interconnect device, such as the H4005, DESTA, DELNI, or DEMPR. The transceiver cable can be a maximum of 40 meters (131 feet) long. ▲ Refer to Section 4 for communications cable order codes.

The cabinet kit, transceiver cable, and network interconnect device must be ordered separately. ▲ Consult your local sales representative for further information.

DEC LAN Controller 200 Order Codes	
VAXBI Ethernet Adapter	DEBNI-M

Digital Ethernet Large-Scale-Integration Unibus Adapter (DELUA)

The DELUA is an 802.3/Ethernet-to-UNIBUS high-performance synchronous communications controller that connects UNIBUS systems (VAX and PDP) to both Ethernet V2.0 and IEEE 802.3 local area networks. It is M68000 microprocessor-based, operates at 10 Mb/s, and has 4-Mb/s throughput capability. (Actual device speed and throughput depend on operating system, system configuration, and application.) The 80-KB RAM is used primarily for buffering of data at the high bus rate. A separate DMA controller is used to access host memory locations.

The DELUA microcode implements data encapsulation and decapsulation, data link management, and all channel access functions to ensure maximum throughput with minimum processor intervention. It provides such network maintainability features as remote loopback of data from other stations, resident microdiagnostics, system identification, and the loading and remote booting of UNIBUS PDP-11 systems from other stations on the network.

The DELUA physically and electrically connects to the standard baseband cable via transceiver cable (BNE3X or BNE4X series) and either a baseband transceiver or Local Network Interconnect (DELNI). The DELUA also connects directly to a DESTA and ThinWire cable in ThinWire networks. Transceiver cable can be a maximum of 40 meters (131 feet) and must be ordered separately. ▲ Refer to Section 4, "Communications Cables," for all order codes.

The DELUA-M option includes one hex module. A cabinet kit option, which must be ordered separately with the DELUA-M, contains a distribution panel and associated internal cabling.

Specifications	
Mounting Code	One hex slot
Power Requirements	
dc amps drawn at 5 Vdc	8.0 A
dc amps drawn at –15 Vdc	1.0 A (to power the transceiver)
Bus Loads	4 Vac, 1 Vdc
I/O connection panel inserts	Two panel units
Environmental Class	B (Refer to Appendix C for details.)

DELUA Order Codes	
Option	**Order Code**
802.3/Ethernet UNIBUS single-line interface communications controller, includes base model only	DELUA-M
For system installation, select the appropriate external cables and one of the following cabinet kits:	
For use with VAX-11/725 shielded cabinets	CK-DELUA-KL
For general purpose use with shielded cabinet	CK-DELUA-KM
For use with unshielded cabinet	CK-DELUA-K1

Digital Ethernet LSI Q-Bus Communications Controller (DELQA)

The DELQA is an 802.3/Ethernet-to-Q-bus communications controller that connects Q-bus MicroPDP-11 and MicroVAX systems to an Ethernet V2.0 or IEEE 802.3 local area network.

The DELQA provides the firmware capability to support Maintenance Operation Protocol (MOP), which offers enhanced network management features, including remote circuit loopback, system identification messages, remote booting of diskless systems, maintenance of data link counters, and IEEE 802.2 XID and Test.

The DELQA physically and electrically connects to the standard baseband cable by means of a cabinet kit, transceiver cable (BNE3H, BNE3K, BNE3L, or BNE3M series), and baseband transceiver or Local Network Interconnect (DELNI). The DELQA also connects to ThinWire via a DESTA station adapter.

Features

- Dual-size module saves on backplane space.
- Low-power draw provides more available power for additional peripheral and communications-options.
- Onboard self-test executes extensive testing of the DELQA circuitry at each power up or reset.
- Onboard MOP provides the ability to decrease the demand on system software, thus reducing processor time required to support network management activities.

Specifications	
Mounting Code	One dual slot
Power Requirements	
dc amps drawn at 5 Vdc	2.5 A
dc amps drawn at 12 Vdc	0.5 A
Bus loads	3.3 Vac, 0.5 Vdc
I/O connection panel insert	Size A
Operating Environment	
Storage temperature	0° C to 66° C (32° F to 151° F)
Operating temperature	5° C to 60° C (41° F to 140° F)
Relative humidity	10% to 95% noncondensing (complies with DEC 102 standard, Class C)

DELQA Order Codes	
Option	**Order Code**
802.3/Ethernet-to-Q-bus communications controller, requires one of the following cabinet kits:	DELQA-M
Cabinet kit for BA123 and BA11-M enclosure	CK-dELQA-YA
Cabinet kit for MicroPDP-11 BA23 enclosure	CK-DELQA-YB
Cabinet kit for H9642 cabinet	CK-DELQA-YF

Digital Ethernet Station Q-Bus Communications Controller (DESQA)

The DESQA is an 802.3/Ethernet-to-Q-bus communications controller that connects MicroPDP-11 and MicroVAX systems in BA200-series enclosures to an 802.3/Ethernet local area network. Based on the DELQA, the DESQA combines, on a quad-height module, the functions of the DELQA-M with a cabinet kit and ThinWire Ethernet Station Adapter (DESTA). A separate cabinet kit is not required because the bulkhead is integral to the module handle.

The DESQA can interface directly to either standard 802.3/Ethernet cable (15-pin D-connector) or to ThinWire (BNC connector). This allows the user to connect a system to the local area network using a standard 802.3/Ethernet transceiver cable or ThinWire cable.

Specifications	
Mounting Code	One quad BA200 slot
Power Requirements	
dc amps drawn at 5 Vdc	2.4 A
dc amps drawn at 12 Vdc	0.22 A
Maximum watts drawn	14.64 W
Bus loads	3.3 Vac, 0.5 Vdc
Operating Environment	
Storage temperature	0° C to 66° C (32° F to 151° F)
Operating temperature	5° C to 60° C (41° F to 140° F)
Relative humidity	10% to 95% noncondensing (complies with DEC 102 standard, Class C)

Ordering Information

Order the DESQA-SA for factory installation, and the DESQA-SF for field installation.

The DESQA physically and electrically connects to standard 802.3/Ethernet cable via BNE3K or BNE3M transceiver cable, directly to BC16M ThinWire, or to broadband cable via transceiver cable, broadband transceiver, and broadband drop cable. These components are not included with the DESQA.

The following accessories are supplied with the DESQA:

- One ThinWire BNC T-connector
- Two 50-ohm terminators

DESQA Order Codes	
Option	**Order Code**
Factory-installed 802.3/Ethernet-to-Q-bus communications controller for BA200-series enclosures	DESQA-SA
Field-installed 802.3/Ethernet-to-Q-bus communications controller for BA200-series enclosures	DESQA-SF
DESQA Technical Manual	EK-DESQA-TM

DESVA

The DESVA is a synchronous 802.3/Ethernet communications controller that connects MicroVAX 2000 and VAXstation 2000 computers to ThinWire local area networks directly via ThinWire or standard Ethernet cable. The DESVA has FCC certification, is fully compatible with the IEEE 802.3 standard, and operates at 10 Mb/s.

The DESVA provides 802.3/Ethernet data link layer functions and a portion of the physical channel functions. Supported under DECnet Phase IV software, the DESVA is a standard component of the VAXstation 2000, and optional for the MicroVAX 2000.

Ordering Information

The DESVA-AA allows direct connection to ThinWire local area networks only. The DESVA-Bx options include a 15-pin standard Ethernet connector and a short transceiver cable, allowing users to connect to either standard Ethernet cable (15-pin) or to ThinWire Ethernet cable. DESVA-Bx options can be ordered only for MicroVAX 2000 systems built after March 18, 1988 (U.S. serial WF8115880 and above). Earlier MicroVAX 2000 systems cannot be retrofitted because of FCC and UL regulations.

DESVA Order Codes

Option	Order Code
ThinWire 802.3/Ethernet communications controller option for MicroVAX 2000. Includes Networking Guide, T-connector, two terminators, and connector plus transceiver cable for connection to standard baseband cable.	DESVA-AA
Factory-installed controller for ThinWire or standard Ethernet cable. Includes Networking Guide, T-connector, and two terminators.	DESVA-BA
Add-on (Customer Services installable) controller for ThinWire or standard Ethernet cable. Includes Networking Guide, T-connector, and two terminators.	DESVA-BF

DEC TRNcontroller 100 (DEQRA)

The DEC TRNcontroller 100 is a Q-bus adapter that enables MicroVAX/VAXserver 3xxx and VAX/VAXserver 4000 systems to connect to a 4 or 16 Mb/s 802.5/Token Ring network. The DEQRA, in combination with the DEC Token Ring Network Device Driver for VMS V1.0 (TRDRV V/V), enables these systems to act as DECnet Phase IV full-function nodes and interoperate with other DECnet Phase IV systems on either 802.5/Token Ring or Ethernet LANs.

When configured with PATHWORKS for VMS V4.1, these systems can act as PC LAN servers for PATHWORKS clients on either 802.5/Token Ring or Ethernet LANs. Also supported are user-supplied applications via VMS $QIO and Alternate Start (ALTSTART)-I/O interfaces. The TRDRV V/V driver kit includes online diagnostics, installation verification procedures, and the DEQRA-CA host loadable microcode.

Features

- The driver supports PATHWORKS for VMS configured servers.
- The VAX can act as a PATHWORKS server, providing print and file services to PATHWORKS clients on both 802.5/Token Ring and 802.3/Ethernet.
- Soft switchable between 4 and 16 Mb/s.
- Includes self-test diagnostics and VMS installation verification procedure kit.
- Supports user-supplied applications via VMS $QIO and ALTSTART-I/O interfaces.
- Suitably configured VAX can act as a DECnet host based router between 802.5 and 802.5 LANs, or between 802.5 and 802.3 LANs when co-residing with a DELQA. This configuration is recommended for casual access only.

- Supports shielded twisted-pair connection only.
- Microcode is downline loaded onto DEQRA.
- EIA232 console port can support console device for debugging purposes.
- Supported in BA200 and BA400 series enclosures (MicroVAX/VAXserver 3xxx, VAX 4000 systems except 3100).

Specifications	
Mounting Code	One quad slot
Power Requirements	
dc amps drawn at 5 Vdc	4.0 A
dc amps drawn at 12 Vdc	0.1 A
Bus loads	ac 5, dc 2
Environmental Class	C (Refer to Appendix C for details.)

Required Software

- VMS operating system V5.4-3 and associated DECnet-VAX

Ordering Information

Order the DEQRA-CA for a field-installable controller. This controller is not currently available as a factory-installed option.

The DEQRA physically and electrically connects to the 802.5/Token Ring shielded-twisted pair cable. These connection components are not included with the DEQRA-CA and must be ordered separately.

DEQRA Order Codes	
Option	**Order Code**
Field-installed DEQRA (includes VMS device driver license)	DEQRA-CA
Debugging console cable	BC29E-15
TRDRV V/V documentation	QA-GVJAA-GZ

▲ Refer to the following for further information on supported processors and services:

- Software Product Description 36.32.00

Introduction

Bridges and/or repeaters connect local area networks (LANs) separated by 100 meters (328 feet) or less. Two 50-meter (164-feet) transceiver cables make up this distance. A standard IEEE 802.3/Ethernet LAN has a limit of 2.8 km (1.7 miles) between the farthest two nodes on the network. This limitation is the sum of

- Two 50-meter (164 feet) transceiver cables extending from the nodes.
- Three 500-meter (1,640 feet) coaxial cable segments that are connected by two pairs of DECrepeater 200 fiber optic repeaters.
- Four 50-meter (164 feet) transceiver cables connected to the fiber optic repeaters.
- A fiber optic link that is 1 km (3,282 feet) long.

A Digital extended LAN uses the DECbridge 90, LAN Bridge 150, LAN Bridge 200, METROWAVE bridge, and Vitalink Communications Corporation's TransLAN bridge to increase the distance between local area networks and to increase the number of nodes directly connected to 10 Mb/s 802.3/Ethernet LANs.

The DECbridge 90 is a low-cost, compact, high-performance bridge designed for use in small workgroup LAN configurations. It is a member of the WorkGroup Family of Networking Products, which include (in addition to the DECbridge 90) the DEChub 90, the DECrepeater 90T and 90C, the DECserver 90L+, the DECserver 90TL, and the DECagent 90.

Digital's second generation extended LAN bridge products — the LAN Bridge 150, LAN Bridge 200, and DECbridge 600 are high-performance, protocol- independent bridges that link IEEE 802.3/Ethernet LANs. The differences between the LAN Bridge 150 and 200 are primarily concerned with performance and media-handling capability. In addition, the LAN Bridge 200 offers greater functionality including more flexible filtering (source address and protocol) as well as levels-of-monitoring capability while it is bridging. The DECbridge 600 is a 3-multiport 802.3/Ethernet bridge that migrates to FDDI networks. ▲ For further information on the DECbridge 600, refer to its product description in Section 3, "FDDI DECbridge Family."

The local LAN Bridge 150 interfaces two transceiver drop cables. The fiber optic LAN Bridge 150 interfaces one transceiver cable and one fiber optic link. The fiber optic link must connect to another fiber optic LAN Bridge 150 or to a fiber optic DECrepeater 200 (DEREN-RP/RQ).

Three versions of the LAN Bridge 200 are available: local; 3 km (1.9 miles) fiber optic; and 10 km (6.2 miles) fiber optic. Port A of each version is switch-selectable between ThinWire and thick wire IEEE 802.3/Ethernet segments. Port B accommodates thick wire IEEE 802.3/Ethernet segments or optical fiber connections, depending on the versions ordered. A ThinWire segment is accessed using a BNC T-connector while a thick wire segment is accessed using a transceiver cable and baseband transceiver.

The fiber optic LAN Bridge 200 interfaces one transceiver cable and one fiber optic link. A LAN Bridge 200-based fiber optic link can be built using a pair of 3 km bridges, a pair of 10 km bridges, or a 3 km bridge and the fiber optic DECrepeater 200.

- The METROWAVE bridge (DEMWB), interfaces each end of one transceiver drop cable with a microwave link. The METROWAVE bridge connects geographically separated LANs where cable is neither feasible nor economical, but where line-of-sight exists between the two sites.
- In addition, Digital offers the Vitalink TransLAN bridge through a third-party marketing agreement. This bridge is primarily intended to connect LANs across distances greater than a few miles, where coaxial, fiber optic, or microwave links are not available or feasible.

DECbridge 90, LAN Bridge 150, LAN Bridge 200, DECbridge 600, METROWAVE Bridge, TransLAN Extended LANs

Digital's IEEE 802.3/Ethernet bridges: the DECbridge 90, LAN Bridge 150, LAN Bridge 200, DECbridge 600, and the METROWAVE bridge, are designed to transparently connect a series of up to eight 802.3/Ethernet LANs, creating an extended LAN that could be 44 km (27 miles) long, using fiber optic cable.

Many of the functions and capabilities of the Digital and Vitalink bridges are similar. Two exceptions, however, are Digital's implementations of

- DECelms (Extended LAN Management Software), which allows network managers at a Digital VMS management station to configure, monitor, and control Digital's FDDI wiring concentrators, 802.3/Ethernet-to-FDDI bridges, and 802.3/Ethernet LAN bridges on the 802.3/Ethernet and FDDI networks.
- LAN Traffic Monitor (LTM) software, which allows Digital's LAN Bridge 150 to be used as a dedicated network monitor.

Vitalink's TransLAN bridge is primarily intended to connect LANs across distances greater than a few miles where coaxial, fiber optic, or microwave links are not available or feasible. TransLAN provides industry-standard V.35 or RS449/422 connections and is capable of transmitting at a maximum rate of 2.048 Mb/s. This can be a constraint when the average traffic load is higher than the 2.048 Mb/s capability. Additionally, depending on the communications links (for example, terrestrial lines), delay may be apparent. The TransLAN bridge is managed from a bridge-management console attached to the TransLAN bridge, or from DECmcc.

Comparison of Repeaters, Bridges, and Routers

The following table compares the LAN extension features of the LAN bridges with the DECrepeater 200 and DECrouter 2000.

Comparison of Extended LAN Devices

Features	Repeater	Bridge	Router
ISO layer	Physical	Data link	Network
Forwarding capability	Forward bits	Forwards frames	Forwards messages
Addressing function	No address	MAC address[1]	Network address
Network extension	Yes	Yes	Yes
Packet filtering	No	Yes	Yes
Traffic management	No	Yes	Yes
Network management	No	Yes	Yes
Performance (throughput)	High	High	Medium
Cost	Low	Medium	Medium
Transparent to upper level	Yes	Yes	No
Message segmentation	N/A	No	Yes
Load sharing	No	No	Yes
Mixed media[2]	Yes	Yes	Yes
Common carrier	No	No	Yes
Multivendor network	Yes	Yes	No
Auto backup[3]	No	Yes	Yes
Support for DECnet area routing	N/A	N/A	Yes

[1]Media Access Control (MAC), requires Ethernet or IEEE 802.3 packet format.
[2]Refer to the product descriptions for media supported.
[3]Ability to activate upon failure of a parallel device.

DECbridge 90

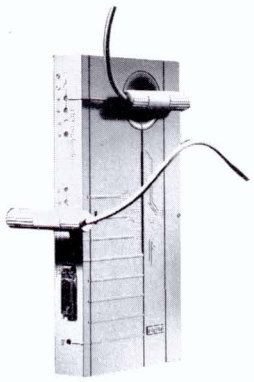

The DECbridge 90 is a compact, low-cost, protocol-independent bridge that connects and isolates workgroups from the larger LAN backbone. It is part of Digital's WorkGroup Family of Networking Products. The DECbridge 90 can be used in both structured and unstructured workgroup environments. It has a ThinWire and AUI connection to the Ethernet backbone, and a ThinWire only connection to the workgroup. The DECbridge 90 supports a maximum of 200 nodes on the workgroup side. It complements the LAN Bridge 150/200 by isolating workgroup-specific network and protocol traffic from the building or enterprise LAN.

This product can be used as a standalone bridge or installed in the DEChub 90. In a hub configuration, the DECbridge 90 provides both standard coaxial cable and fiber optic cable connection from its AUI port. ▲ Refer to "Wiring Hubs" for more information about the DEChub 90.

Features

- Full autoconfiguring for use with any IEEE 802.1 compliant bridge, including Digital's LAN Bridge products.
- Provides high-speed communications.
- Filters up to 16 protocols in both directions.
- Can be used as a standalone bridge or snapped into a DEChub 90 backplane.

Specifications	
Physical Characteristics	
Height	27.9 cm (11.0 in)
Width	3.2 cm (1.3 in)
Depth	14.0 cm (5.5 in)
Weight	0.77 kg (1.7 lbs) (without power supply)
Power Requirements	
Nominal voltage	104 V to 128 V (-AA models only)
	208 V to 256 V (all other models)
Frequency	50 Hz to 60 Hz
Maximum current	0.56 A
Maximum power	6.43 W
Operating Environment	
Temperature	5° C to 50° C (41° F to 122° F)
Relative humidity	10% to 95% (noncondensing)

Ordering Information

The standalone version of the DECbridge 90 includes a power supply and a 2.4 meter (8 foot) dc cable. User documentation is also included.

DECbridge 90 Order Codes	
Option	**Order Code**
Standalone Use	
DECbridge 90	DEWGB-**+
Hub-based Use	
DECbridge 90 (without power supply) for inclusion in DEChub 90 backplane	DEWGB-MA+
To convert the hub-based model to standalone model:	
120/240 V power supply and 2.4 m (8 ft) power cable	H7827-AA
Snap-on cover for DEChub 90 model of DEChub 90	H0342-AA

** Replace the ** with one of the following codes:
120 V – AA (United States, Canada, Japan)
240 V – AK (Switzerland), AD (Denmark), AE (United Kingdom, Ireland), AX (Germany, Austria, Belgium, Finland, Holland, Norway, Sweden, France, Spain), AI (Italy), BJ (India, S. Africa), AT (Israel), AZ (Australia, New Zealand)

+ Prefix the order code with DL- to order quantities of 12 units.

LAN Bridge 150 (DEBET)

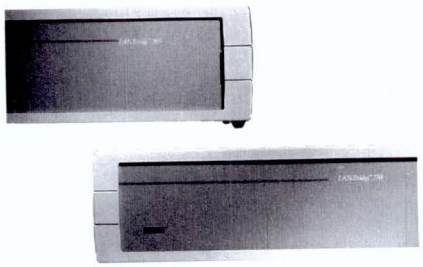

The protocol-independent LAN Bridge 150 allows the interconnection of two IEEE 802.3/Ethernet LANs to create a seamless extended local area network. It can easily expand a local area network to accommodate the short- and long-term growth of an organization. The intelligence of the LAN Bridge 150 allows it to be a very efficient traffic management tool. The network manager can increase bandwidth efficiency by transparently isolating traffic on heavily loaded subnetworks or workgroups from the network backbone. Traffic management is automatic; local traffic remains local while remote traffic is forwarded to the appropriate destination.

The LAN Bridge 150 utilizes the LAN Bridge 100 and IEEE 802.1 standard loop detection implementations to provide autoconfiguration and autobackup (redundant) capabilities. The LAN Bridge 150 also includes a password (access) protection feature, which is controlled using DECelms or DECmcc ELM management software. This feature enables a network manager to reduce the risk of unauthorized or unintentional modification of the bridge's parameters.

The LAN Bridge 150, used as the platform for Digital's LAN Traffic Monitor LTM, assists the network manager in planning for optimum network performance and efficient network growth. ▲ Refer to Section 7, "Additional Network Management Products."

Two versions are available: local and fiber optic (remote). Local links require one LAN Bridge 150, while fiber optic links require either two fiber optic LAN Bridge 150s or one fiber optic LAN Bridge 150 and one fiber optic DEREP repeater.

Local LAN Bridge 150 Configuration

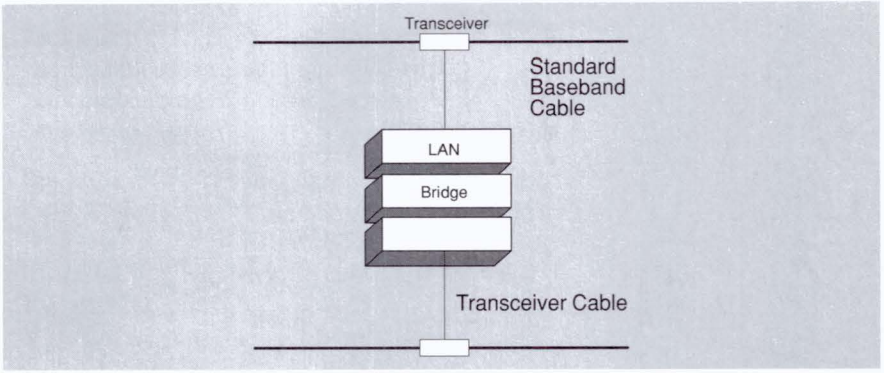

TBG-039-00

Remote Fiber Optic LAN Bridge 150 Configuration

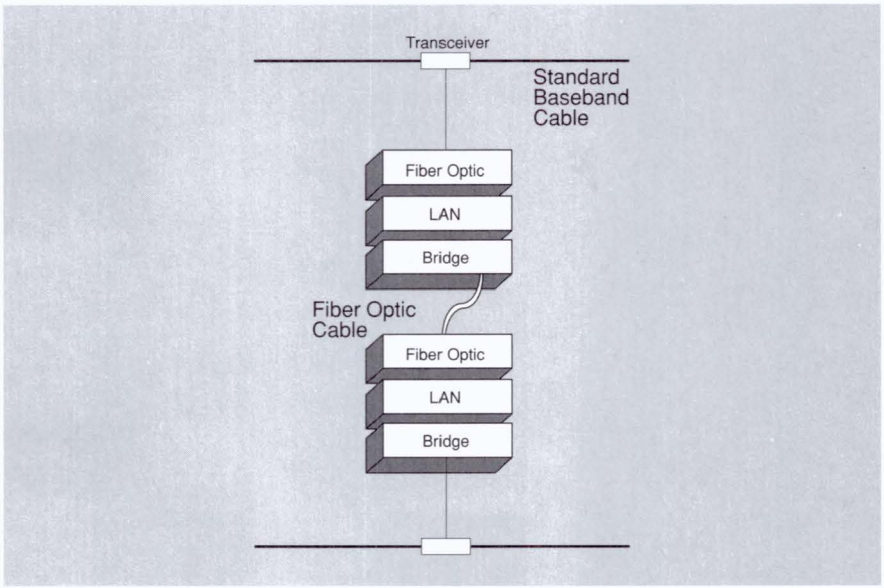

TBG-040–00

Features

- Filters traffic at 24,272 pps; forwards traffic at 13,404 pps. Such high-performance assures quality network performance for the user (even in a lightly loaded network) and a more responsive, productive LAN.
- Dynamic address learning automatically identifies system locations within an extended LAN.
- Autoconfiguration between LAN Bridge 100 and IEEE 802.1 Spanning Tree implementations, or switch-selectable to 802.1 mode with DECelms or DECmcc ELM. This provides standards-based solutions and backward compatibility for Digital's LAN Bridge 100 installed base.
- Password protection for bridge management functions that prevents unauthorized modification of bridge parameters is available using DECelms or DECmcc ELM.
- Compliance with IEEE 802.1, 802.2, and 802.3 standards allows interoperation within multivendor environments.

- Autobackup capability, using redundant bridges increases availability and reliability of the network.
- Optional DECmcc ELM management software provides additional bridge management. Please refer to Section 7, "Additional Network Management Products", for more information.
- Optional LAN Traffic Monitor (LTM) analyzes utilization in multivendor extended LAN environments with graphic and tabular displays provided.

Specifications		
Physical Dimensions	**With Plastic Enclosure**	**Without Plastic Enclosure**
Height	16.2 cm (6.4 in)	13.3 cm (5.3 in)
Width	49.4 cm (19.4)	43.6 cm (17.2 in)
Depth	31.3 cm (12.3 in)	29.8 cm (11.7 in)
Weight	6.7 kg (15 lb)	4.5 kg (10 lb)
Power Requirements		
Voltage (nominal)	120 V range — 88 Vac to 132 Vac 240 V range — 176 Vac to 264 Vac	
Current	at 120 V, 1.1 A; at 240 V, 0.7 A	
Frequency	47 Hz to 63 Hz	
Power consumption	168 W	
Heat dissipation	574 Btu/hr	
Operating Environment		
Temperature	See Appendix C.	
Air flow	37.5 CFM, about 10 to 15 cm (4 to 6 in), of space must be provided on both ends of the unit for adequate air flow	

Ordering Information

All four models include installation instructions. The LAN Bridge 150 uses the same power cord kit as the LAN Bridge 200. A United States or Canada power cord kit is available to retrofit models ordered for a 240 Vac setting.

LAN Bridge 150 Order Codes	
Option	**Order Codes**
Local LAN Bridge 150, 120 V, includes a U.S. power cord	DEBET-AC
Local LAN Bridge 150, 240 V, requires a power cord kit	DEBET-AD
Fiber optic LAN Bridge 150, 120 V, includes a U.S. power cord	DEBET-RP
Fiber optic LAN Bridge 150, 240 V, requires a power cord kit	DEBET-RQ
Country Kits	BN20*-2E+
* Replace the * with one of the following codes: A (United States, Canada), B (Japan), C (Australia, New Zealand), D (Belgium, Finland, France, Germany, Holland, Norway, Spain, Sweden), E (United Kingdom, Ireland), F (Switzerland), H (Denmark), J (Italy), K (India, S. Africa), L (Israel)	
+ BN20A-2E is included with DEBET-AC/-RP models only.	

An upgrade is available in the United States that enables the installed base of the LAN Bridge 100 to obtain the increased functionality of the LAN Bridge 150. ▲ Consult your local sales representative for further information.

Order Codes for LAN Bridge 100 Upgrade	
Option	**Order Codes**
LAN Bridge 100/150 Upgrade Kit, local, 120 V	DEBET-AU
LAN Bridge 100/150 Upgrade Kit, local, 240 V	DEBET-AG
LAN Bridge 100/150 Upgrade Kit, fiber, 120 V	DEBET-RU
LAN Bridge 100/150 Upgrade Kit, fiber, 240 V	DEBET-RG

LAN Bridge 200 (DEBAM)

The LAN Bridge 200 is a self-learning, 2-port, IEEE 802.3/Ethernet LAN bridge. The primary function of this intelligent hardware device is to interconnect two IEEE 802.3/Ethernet LANs and provide traffic management between the LANs. The LAN Bridge 200 automatically determines whether or not traffic will cross the bridge, thus increasing available bandwidth.

The LAN Bridge 200 filters (discards) data at 29,760 pps and forwards (transmits) data at 14,880 pps; these rates are the maximum allowed by the IEEE 802.3/Ethernet specifications and exceed the LAN Bridge 100/150 data rates. The advantages of high-performance will

- Ensure that the bridge does not create a bottleneck situation during absolute worst case (peak) traffic conditions.
- Provide Simple Network Management Protocol (SNMP) management of the LAN Bridge 200. The product supports SNMP Get requests, SNMP Traps, and SNMP Set functions.
- Allow the LAN Bridge 200 to simultaneously perform other functions such as loop detection and DECelms or DECmcc ELM management software (RBMS) command response while managing the flow of data traffic.

A number of the LAN Bridge 200 features such as address and protocol filtering, password (access) protection, and the ability to disable learning are implemented with DECelms or DECmcc ELM. Using DECelms or DECmcc ELM, a network manager can determine which users or groups of users are permitted access between LANs. ▲ Refer to "DECmcc ELM" and "DECelms," in Section 7 for further information on address and protocol filtering.

The LAN Bridge 200 utilizes the LAN Bridge 100 and IEEE 802.1-standard loop detection implementations for ensuring loop-free topologies and providing automatic backup (redundant) capability.

The LAN Bridge 200 offers multiple-media support. Customer installable, the LAN Bridge 200 is available in three versions: local; 3 km fiber optic; and 10 km fiber optic. Port A of each version is switch-selectable between ThinWire and thick wire IEEE 802.3/Ethernet segments. Port B accommodates thick wire IEEE 802.3/Ethernet segments or optical fiber connections depending on the versions ordered. Broadband connections are possible using an external modem. Fiber optic 802.3/Ethernet connections to Chipcom's ORnet product are also possible using the local LAN Bridge 200 and Chipcom's fiber optic transceiver.

Features

- Destination/source address and protocol filtering provide greater network control by propagation of network problems while increasing security and bandwidth utilization.
- Up to 10 km (6.2 miles) optical fiber support increases distance capabilities.
- Handles worst-case network traffic conditions while simultaneously handling background tasks such as Spanning Tree Implementation and remote bridge management, thus assuring the bridge is kept accessible, manageable, and configurable even under extreme traffic loads.
- Enhanced network monitor functions provide key traffic statistics and problem identification while operating in bridge mode.

- Password protection for bridge management functions prevents unauthorized modification to bridge parameters.
- Supported Management Information Bases (MIBs) include
  - MIB II per RFC 1213
  - DEC Vendor MIB ELANEXT
  - Bridge MIB RFC 1286
- Autoconfiguration between LAN Bridge 100 and IEEE 802.1 Spanning Tree implementations, or switch-selectable to 802.1 mode with DECelms or DECmcc ELM. This provides standards-based solutions and backward compatibility for Digital's LAN Bridge 100 installed base.
- Fiber optic link fault detection identifies broken or unconnected fiber link.
- Industry-standard ST-type fiber optic connector provides higher reliability and better connection than the SMA-type connector.
- Switch-selectable ThinWire or thick wire port allows media flexibility.
- 16,000 node address table easily accommodates large networks.
- Node address learning optionally disabled with DECelms or DECmcc ELM increases flexibility to determine which nodes may access the extended LAN. This feature also allows for greater network security.

Specifications

Physical Dimensions	**With Plastic Enclosure**	**Without Plastic Enclosure**
Height	16.2 cm (6.4 in)	13.3 cm (5.3)
Width	49.4 cm (19.4)	43.6 cm (17.2 in)
Depth	31.3 cm (12.3 in)	29.8 cm (11.7 in)
Weight	7.3 kg (16.0 lb)	5.2 kg (11.0 lb)
Power Requirements		
Voltage (nominal)	120 V range — 90 Vac to 128 Vac 240 V range — 190 Vac to 256 Vac	
Current	2.3 A at 120 V; 1.2 A at 240 V	
Frequency	47 Hz to 63 Hz	
Power consumption	230 W	
Heat dissipation	275 Btu/hr	
Operating Environment		
Temperature	5° C to 50° C (41° F to 122° F)	
Relative humidity	10% to 95% (noncondensing)	
Air flow	70.0 CFM. A minimum of 10 cm (4 in) of space must be provided on both ends of the unit for adequate air flow.	

Ordering Information

All six models include installation instructions. The LAN Bridge 200 uses the same power cord kit as the DECserver 550 and DECrepeater 200. A United States or Canada power cord kit is available to retrofit models ordered for 240 V setting.

As of June 26, 1992, all customers who order a Digital LAN Bridge 200 will be shipped a Digital LAN Bridge 200 which supports the IETF SNMP protocol as well as complete support for the RBMS protocol.

LAN Bridge 200 Order Codes

Option	Order Codes
Local LAN Bridge 200, 120 V, includes a U.S. power cord	DEBAM-AA
Local LAN Bridge 200, 240 V, requires a power cord kit	DEBAM-AB
LAN Bridge 200, 3 km fiber optic, 120 V, includes a U.S. power cord	DEBAM-RC
LAN Bridge 200, 3 km fiber optic, 240 V, requires a power cord kit	DEBAM-RD
LAN Bridge 200, 10 km fiber optic, 120 V, includes a U.S. power cord	DEBAM-RF
LAN Bridge 200, 10 km fiber optic, 240 V, requires a power cord kit	DEBAM-RG
New LAN Bridge 200 IETF SNMP Update Kit	DEBAM-UP
Country Kits	BN20*-2E+

* Replace the * with one of the following codes: A (United States, Canada), B (Japan), C (Australia, New Zealand), D (Belgium, Finland, France, Germany, Holland, Norway, Spain, Sweden), E (United Kingdom, Ireland), F (Switzerland), H (Denmark), J (Italy), K (India, S. Africa), L (Israel)

+ BN20A-2E is included with DEBAM-AA/-RC/-RF models only.

Note: Customers with existing service contracts on their LAN Bridge 200 should contact their local Digital Services office to arrange an update.

METROWAVE Bridge METROWAVE 150/200

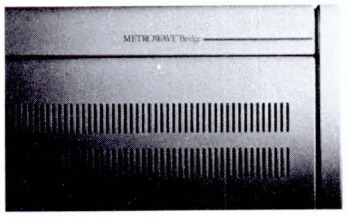

The METROWAVE bridge solves the need to connect geographically separated Ethernet local area networks (LANs) within a metropolitan or campus environment where cable cannot be strung or economically leased. The bridge connects two Ethernet LANs separated by such obstacles as streets, highways, and waterways. Transparent to the user, the bridge provides high-speed (10 Mb/s) transmission via a 23 GHz wideband, duplex, frequency-modulated microwave link over line-of-sight distances up to 7.2 km (4.5 miles). The METROWAVE 200 link can be customized for distances greater than 7.2 km (4.5 miles). In the U.S., please call the Digital Sales Support Team (1–800–832–6277) for more information.

The METROWAVE bridge is a member of Digital's LAN Bridge product family. The bridge provides a microwave connection solution that delivers the same high-performance, standards-compliant, and store-and-forward filtering capability as the LAN Bridge 150 or LAN Bridge 200, depending on the model selected. IEEE 802.3/Ethernet V2.0-compliant, the METROWAVE bridge operates in Ethernet LANs that are totally Digital, mixed vendor, or completely outside vendor environments. DECnet, Xerox Network System (XNS), Transmission Control Protocol/Internet Protocol (TCP/IP), Local Area Transport (LAT), and any other protocols that run on IEEE 802.3/Ethernet V2.0 can all simultaneously take advantage of network functions.

The METROWAVE bridge can extend both Ethernet security functions and Local Area VAXcluster (LAVc) Distributed Computing functionality across the microwave link. Using a dual-polarity antenna, Ethernet applications can be multiplexed with T1 and video applications so that information shares the same open air path.

The METROWAVE bridge uses low-power, point-to-point microwave technology for safe transmissions within ANSI and FCC guidelines.

The microwave equipment for this product is manufactured by a Digital joint marketing partner, Microwave Radio Corp. (MRC). The microwave radios, modified specifically for the METROWAVE bridge, are based on widely proven 23 GHz technology. Digital's microwave adapter converts microwave equipment signal levels to standard 802.3/Ethernet signal levels. It also notifies the LAN bridge of a collision when both link stations attempt simultaneous transmission over the microwave link.

METROWAVE Bridge Configuration

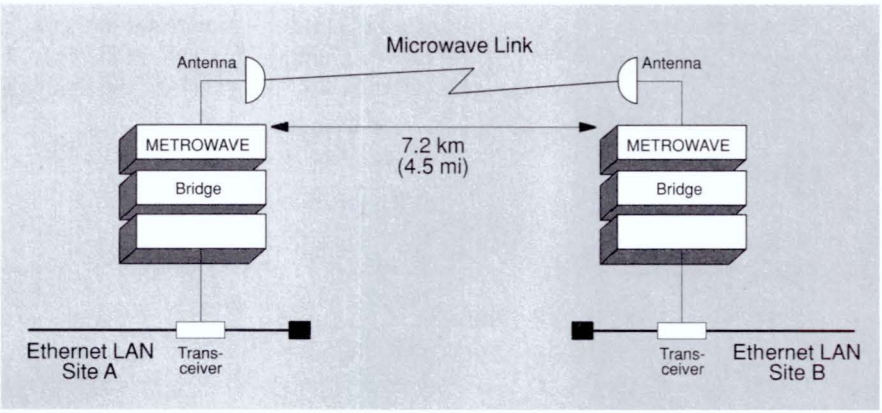

TBG-041-00

Features

- The microwave link, transparent to the user, allows connection when cable is too expensive or not feasible.
- 802.3/Ethernet 10 Mb/s bandwidth provides high-speed transmission.
- Protocol independence and Ethernet V2.0 compliance accommodates multivendor environments.

- Easily installed for quick availability.
- T-carrier and videosystem solutions can be combined with the METROWAVE bridge to increase flexibility and reduce overall costs.
- Dynamic Address Learning allowing automatic network reconfiguration.

▲ Refer to the LAN Bridge 150 and LAN Bridge 200 product descriptions for additional features that the METROWAVE bridge shares with the LAN bridges.

Availability

This product is available in the United States, Canada, Mexico, and Australia. Availability of private-use licenses for 23-GHz microwave equipment also exists in some other countries where MRC equipment is distributed and supported. Please call the Digital Sales Support Team in the U.S. at 1-800-832-6277 for details, or Digital at Annecy, France in Europe.

Implementing the Link

The customer is responsible for such activities as path survey, site analysis, and compliance with FCC licensing regulations. Assistance in performing these activities is available from Digital and authorized MRC dealers.

Specifications

The LAN bridge and the microwave adapter operate at 10 Mb/s using the Carrier Sense Multiple Access with Collision Detection (CSMA/CD) technique. The radio frequency (RF) unit generates a 23 GHz microwave carrier. It is colocated with the antenna and is powered by a cable from the microwave transmitter/receiver controller.

The following specifications are for the LAN bridge, the microwave adapter, and the transmitter/receiver controller in a cabinet. ▲ For individual specifications or additional information, refer to the Digital publication, *METROWAVE Bridge Links Ethernet LANs with Microwave Technology* (EC-F0813-49), available by calling 1-800-832-6277 (in the United States).

Specifications	
Physical Characteristics	
Height	80 cm (31.50 in)
Width	54.2 cm (21.35 in)
Depth	79.4 cm (31.25 in)
Weight	86.2 kg (190 lb)
Power Requirements	
Voltage tolerance	93 to 128 Vac
Line frequency	60 Hz
Maximum current	3.95 A (120 Vac)
Power consumption	326 W (max)
Environmental Class	B (Refer to Appendix C for details.)

Prerequisite Software

No special software is required for operation of the METROWAVE bridge because the bridge control functions are resident in the LAN Bridge 150/200 component.

Optional Management Software

DECelms is recommended for enhanced control and monitoring of the microwave link for Digital LANs. ▲ Refer to Section 8, "Network and System Management Products," for more information.

Ordering Information

A METROWAVE bridge includes two each of a: LAN Bridge 150 or 200, microwave adapter, 2 meter (7 foot) microwave adapter cable, and DEMWA adapter. The cabinet configuration also includes the Ethernet transceiver and 20 meter (66 foot) transceiver cable. The METROWAVE bridge is available premounted in 80 cm (31.5 inch) cabinets, or in configurations suitable for rack mounting in Satellite Equipment Room (SER) racks.

Ordering Microwave Radio Corp. Components

The MRC LAN radio components, designated MR-23VXD, include the following:

- Two transmitter/receiver controllers
- Two 23 GHz RF units
- Two 1-, 2-, or 4-foot microwave antennas

Different lengths of power and coaxial cable assembly have to be ordered separately.

The MR-23VXD and its installation are purchased separately through an authorized MRC dealer. Contact the Digital Sales Support Team in the United States at 1-800-832-6277 for the name, address, and telephone number of the nearest authorized MRC dealer.

METROWAVE Bridge Order Codes for Digital Components

Option	Order Codes
METROWAVE 150 bridge in 2-cabinet configuration package	DEMWB-AA
METROWAVE 150 bridge in 2 SER-compatible configuration package	DEMWB-BA
METROWAVE 150 bridge in 1-cabinet configuration and 1 SER-compatible configuration package	DEMWB-CA
METROWAVE 200 bridge in 2 SER-compatible configuration package	DEMWB-BB

TransLAN Bridges: TransLAN 320/335/350 TransLAN III





The TransLAN bridge (DETLB) included in Digital's bridge family, is the product of an ongoing relationship between Digital and Vitalink that includes joint marketing activities.

This bridge offers solutions supported by Digital for long-distance communication needs by allowing users to access services on their 802.3/Ethernet local area network. TransLAN bridges are available from and serviced by Digital under Digital's standard terms and conditions. When purchased from Digital, the Vitalink TransLAN bridge is fully supported by Digital with installation, warranty, and service.

TransLAN uses high-speed synchronous lines up to 2.048 Mb/s to connect multiple, geographically dispersed LANs. Several bridges can interoperate to combine multivendor 802.3/Ethernet LANs into one integrated, multiprotocol extended LAN. With sophisticated link-level forwarding and a filtering rate up to 14,880 pps, TransLAN handles long-distance traffic between high-speed 802.3/Ethernet LANs.

The TransLAN bridge transparently extends a LAN over thousands of miles, and all traffic from any station on a connected LAN appears as local, including both host-to-host and terminal traffic. The user has simple, direct access to any compatible resource in the extended network. The TransLAN bridge filters locally addressed date frames and forwards only remote traffic.

In addition to TransLAN bridge models, the Vitalink family also includes TransPATH, a truly integrated bridging and routing solution. ▲ For more information on TransPATH, refer to the product description in the "802.3/Ethernet Communications Routers, Bridges, and Gateway Services" section.

TransLAN Features

- Connects 802.3/Ethernet LANs for long-distance communications with protocol transparency and simple user access.
- Uses high-speed synchronous lines — two T1 links or up to eight lower-speed parallel links. Supports transmission speeds ranging from 56 Kb/s to 3.088 Mb/s (2 × T1). (Aggregate speed and number of lines depends on the model selected.)
- Operates with the LAN Bridge 150, LAN Bridge 200, and METROWAVE bridge in an extended LAN environment.
- Provides automatic activation of backup links if the primary link fails.
- Provides Class-of-Service priority, protocol filtering, and other traffic-filtering options.
- Provides enhanced performance support for Digital's terminal servers.
- Includes Vitalink Management Program for network planning and diagnostics. This service can be centralized at one site or distributed throughout the network. Capabilities include comprehensive bridge, link, and network statistics.
- Automatically learns the addresses of network stations, allowing easy installation and automatic reconfiguration when devices are moved or added.

- Provides a consistently high network service level through Distributed Load Sharing (DLS), which allows the use of backup paths during operation.
- Supports switched dial-up 56 Kb/s services for added bandwidth at peak traffic periods for emergency backup or for occasional-user access. Auto-dial, manual, and time-of-day setup are available.
- Availability of the Vitalink Bridge Access Module allows management from DECmcc.

Specifications

	TransLAN 320	TransLAN 335	TransLAN III	TransLAN 350
Physical Dimensions				
Height	8.9 cm (3.5 in)	8.9 cm (3.5 in)	13.2 cm (5.2 in)	13.2 cm (5.2 in)
Width	43.7 cm (17.2 in)	43.7 cm (17.2 in)	44.5 cm (17.5 in)	44.5 cm (17.5 in)
Depth	57.8 cm (22.75 in)	57.8 cm (22.75 in)	59.7 cm (23.5 in)	59.7 cm (23.5 in)
Weight	7.05 kg (15.5 lbs)	7.5 kg (16.5 lbs)	14.5 kg (32 lbs)	14.5 kg (32 lbs)
Operating Environment				
Temperature	5°C to 40°C (41°F to 104°F)	5°C to 40°C (41°F to 104°F)	5°C to 40°C (41°F to 104°F)	5°C to 40°C (41°F to 104°F)
Relative humidity (noncondensing)	10% to 90%	10% to 90%	10% to 90%	10% to 90%
Power Requirements				
Voltage tolerance (Vac)	100 to 130 200 to 260	100 to 130 200 to 260	100 to 130 200 to 260	100 to 130 200 to 260
Power consumption (W)	150	150	200	200
Frequency (Hz)	47 to 63	47 to 63	47 to 63	47 to 63
Number of Lines	2	2	1 to 8	1 to 8
Number of T1 Lines	N/A	2	1	3
Max line speed (Kb/s)				
One line	64	2,048	2,048	2,048
Multiple line aggregate	128	4,096	1,024	4,096
Filtering rate (frames/s)	14,880	14,880	14,880	14,880
Forwarding rate (frames/s)				
Bridging	250	6,800	2,400	6,800

Ordering Information

▲ Refer to the following order codes for specific models available. One part number includes hardware/software, license, media and documentation. The units are configurable for either 120 V or 240 V operation. The Universal Interface Card (UIC) serial port can be configured for V.35, V.36 RS449/422 or X.21 depending on the selection of the interface cable. For more information regarding the TransLAN bridge, contact your local Digital sales representative, or call the Digital Sales Support Team in the United States at 1-800-832-6277.

The TransLAN 320, 335, III, and 350 products are available through Digital in the U.S., Europe, and GIA geographies.

TransLAN System Order Codes

	TransLAN 320	**TransLAN 335**	**TransLAN III**	**TransLAN 350**
V.35/V.36 UIC				
2-port	DETLB-RA	DETLB-FB		
4-port			DETLB-NT	DETLB-PT
8-port			DETLB-NU	DETLB-PU
CCITT V.35				
2-port		DETLB-FA		
4-port			DETLB-NW	DETLB-PW
8-port			DETLB-NX	DETLB-PX
DS1				
1-port			DETLB-NK	DETLB-PK
2-port				DETLB-PM

TransLAN/TransPATH Options Order Codes	
Option	**Order Code**
TransLAN III/350 rackmount kit	DETLX-AA
TransLAN 320/335 rackmount kit	DETLX-AB
TransLAN III/350 add-on Turbo module CCITT V.35, 4-port	DETLX-BG
TransLAN III/350 add-on Turbo module UIC, 4-port	DETLX-BF
TransLAN 350 add-on module, DS1, 1-port	DETLX-BC
TransLAN III/350 add-on module, UIC, 2-port	DETLX-BD
U.S. Cables	
V.35 cable, 7.5 m (25 ft)	DETLX-CA
V.35 cable, 15 m (50 ft)	DETLX-CB
V.35 cable, 22.5 m (75 ft)	DETLX-CC
V.35 cable, 30 m (100 ft)	DETLX-CD
V.35 cable, 45 m (150 ft)	DETLX-CE
UIC/modem cable, V.35, DTE 7.5 m (25 ft)	DETLX-JA
UIC/modem cable, V.35 DCE, 7.5 m (25 ft)	DETLX-JB
UIC/modem cable, V.36 RS449/422, DTE, 3 m (10 ft)	DETLX-JC
UIC/modem cable, V.36 RS449/442, DCE, 3 m (10 ft)	DETLX-JD
DS1 cable 7.5 m (25 ft)	DETLX-GC
DS1 cable 45 m (150 ft)	DETLX-GD
European Cables	
Adapter cable, V.35 to X24, V11	DETLX-CG
Adapter cable, V.36 to X24, V11	DETLX-CH
Adapter cable, V.35 (U) to V.35 (E)	DETLX-JE
UIC/modem cable, V.35 (France), DTE	DETLX-JE
UIC/modem cable, X24/X21	DETLX-JG
TransLAN 350 to TransPATH 350 upgrade kit	DETLX-UA
TransLAN 335 to TransPATH 335 upgrade kit	QB-GV2AX-TW

▲ Cables for DSU/CSU and/or rackmount kit have to be ordered separately.

802.3/Ethernet communications servers are special-purpose systems that provide resource sharing across nodes within a local area network (LAN).

Digital's server products include the following:

- **DECserver 700-16** — Connects up to 16 asynchronous devices, such as desktop devices, modems, printers, personal computers, and Macs.
- **DECserver 700-08** — Connects up to eight asynchronous devices, such as desktop devices, modems, printers, personal computers, and Macs.
- **DECserver 90TL** — Connects up to eight terminals, PCs, and serial printers to a ThinWire 802.3/Ethernet LAN. Supports concurrent LAT/Telnet sessions over the same or different ports.
- **DECserver 90L+** — Connects up to eight terminals, PCs, and serial printers to a ThinWire 802.3/Ethernet LAN.
- **DECserver 250** — Provides the interface between two parallel interfaces, four asynchronous EIA-232-D serial data communication channels, and a single 802.3/Ethernet LAN.
- **MUXserver 320/380 and DECmux 300 Remote Terminal Server** — Connects up to 128 terminals, serial printers, and modems at remote sites to one or more hosts on an 802.3/Ethernet LAN.

Primary Buying Reasons for 802.3/Ethernet Terminal Servers

Server	Reason for Buying
DECserver 700	Fastest throughput/line speed in the industry; allows for PC connectivity; customer-installable memory upgrades
DECserver 90TL	Provides multiprotocol capabilities; can be used standalone or in a hub; low cost-of-entry for small workgroups; supports high bandwidth asynchronous devices
DECserver 90L+	Compact; ease of use; enables easy expansion to hub-based configurations for multiple workgroups
DECserver 250	Offload Digital line printer from CPU backplane; provides multi-CPU/ multi-user access to lineprinter; Digital's Ethernet server dedicated to parallel and serial printers
MUXserver 320/380 DECmux 300	Efficient remote connections include modems, LAT independent hosts, EIA-423 option

Summary of 802.3/Ethernet Terminal Servers

Product	DECserver 700-16	DECserver 700-08	DECserver 90TL	DECserver 90L+	DECserver 250	MUXserver 320/380 DECmux 300
Hardware Type	DSRVW	DSRVW	DSRVE	DSRVG	DSRVP	DSRZE/ DSRZD/ DM3xx
Number of Lines/ Port Speed/ Maximum Throughput	16 at 115 Kb/s 225 K char/s	8 at 115 Kb/s 225 K char/s	8 at 57.6 Kb/s 30 K char/s	8 at 38.4 Kb/s 36 K char/s	Serial: 2 at 19.2 Kb/s, 2 at 9.6 Kb/s; parallel: 2 up to 2,000 lpm	128 at 19.2 Kb/s
Multi-CPU Access	Yes	Yes	Yes	Yes	Yes	Yes
Modem Control	Partial	Full	Limited	No	Full: Yes, Port 1 only; Limited: Ports 2-4	DM3xx-Ax: Yes DM3xx-Bx: No
Memory capacity MB	1 to 8	1 to 8	1 to 4	<1	<1	<1
Interface	Asynch	Asynch	Asynch	Asynch	Asynch	Asynch
Connectivity[1]	tk/tn/tp	tk/tn/tp	tn	tn	tn	tn
Protocol	LAT Telnet SLIP TCP/IP	LAT Telnet SLIP TCP/IP	LAT Telnet SLIP TCP/IP	LAT	LAT	LAT
Downline Load Host Support[2]	VMS, UNIX[3] MS-DOS	VMS, UNIX[3] MS-DOS	VMS, UNIX[3] MS-DOS	No	DECnet VAX, DECnet ULTRIX	DECnet VAX, DECnet ULTRIX
Operational Host Support[4]	VMS UNIX[3]	VMS UNIX[3]	VMS UNIX[3]	VMS, ULTRIX[5]	VMS, ULTRIX[5]	VMS, RSX-11M-PLUS, Micro/RSX, ULTRIX
Management	TSM TSAM SNMP	TSM TSAM SNMP	TSM TSAM SNMP	TSM	TSM TSAM	TSM TSAM

[1]Legend: tk=Thickwire (AUI), tn=ThinWire, tp=Twisted-Pair

[2]The terminal servers support only DECnet Phase IV implementations.

[3]ULTRIX, HP–UX, IBM–AIX, SUN OS, OSF/1 UNIX, SCO UNIX

4Supports all systems using Telnet or LAT protocol

[5]LAT support

Terminal Server Overview

Terminal servers provide a cost-effective way to connect desktop devices, modems, printers, personal computers, and Macintosh terminals to hosts in both an 802.3/Ethernet LAN environment as well as over wide area TCP/IP networks. Each terminal connected to a terminal server can access services running on service nodes connected to the same LAN (refer to Prerequisite Software for supported hosts), or to remote hosts on a wide area network. Terminal servers connect asynchronous terminals at speeds up to 19.2 Kb/s.

Digital offers the following terminal server products:

- **DECserver 700-16** — A 16-port multiprotocol terminal server with multisession support that offers port speeds to 115.2 Kb/s.
- **DECserver 700-08** — An 8-port multiprotocol, high-performance terminal server with multisession support that offers full modem control.
- **DECserver 90TL** — An 8-port multiprotocol terminal server that offers multisession support. The DECserver 90TL can be used in either standalone or DEChub 90 configurations.
- **DECserver 90L+** — An 8-line LAT protocol terminal server that connects video terminals, printers, and personal computers to the Ethernet network environment. The DECserver 90L+ can be used in either standalone or DEChub 90 configurations.
- **DECserver 250** — A high-performance, full-function, Ethernet-based server for both parallel and serial printers.
- **MUXserver 320/380/DECmux 300** — A 32- or 128-line remote server that includes MUXserver software downline loaded into DSRZE/DSRZD hardware, and a remote multiplexer, the DM3xx.

The newest terminal server products, the DECserver 90L+, the DECserver 90TL, the DECserver 700-16, and the DECserver700-08 extend our Open ADVANTAGE-NETWORKS strategy to asynchronous connectivity products for Ethernet. Together, these innovative products meet or exceed all competitive product offerings for industry-standard, multiprotocol support. These products are designed to protect your hardware investment by allowing hardware upgrades with more memory, software upgrades for units in the field, and/or the units to migrate from standalone operation to the DEChub 90 environment.

For all servers except the DECserver 90L+, server software (including diagnostics) is downline loaded into the server from a load host. In the event of hardware or software malfunction, the unit attempts to upline dump the memory image (for later analysis) to the load host, and automatically reloads the software.

The function performed by these terminal servers is similar to that offered by traditional terminal data switches (for example, Gandalf or Micom). The difference is that the terminal servers handle terminal communications over a communications line, while a traditional switch requires multiple terminal line connections. This results in a significant reduction in cost-per-line when using terminal servers, especially when cabling, host power, and packaging expenses are factored into the overall cost of network terminal connection.

In a VAXcluster environment, terminal servers add significantly in maintaining high-availability to the cluster. Features such as login load balancing, automatic login failover, and multisession terminal connections provide greater user productivity.

The implementation of TCP/IP, SLIP, Telnet, and SNMP (and OSI in the future) on the new DECserver 700 platforms further demonstrates Digital's commitment to "open" network protocols and to provide information system solutions across multivendor platforms.

Terminal servers support ANSI terminals, serial printers, and many kinds of personal computers.

Printer Support

A terminal server used for printer applications provides a cost-effective way to distribute a printer or a collection of printers in an 802.3/Ethernet LAN. Each printer connected to a server can be shared between multiple VMS nodes connected to the same LAN or nodes on a TCP/IP network. ▲ Refer to the appropriate terminal server Software Product Description for a list of printers supported.

Features

The following features are common to Digital terminal servers:

- Multiple sessions — Digital terminal servers allow users to establish and maintain multiple host sessions to several service nodes. Only one session is active at a time and users can access the different sessions without repeating a login dialog.
- Load balancing — When more than one node offers the same service, the server (except DECserver 90L+) connects to the node with the highest rating for the service desired. This rating is based on the current loading on the nodes that offer the service.
- Automatic sessions failover — The server (except DECserver 90L+) provides increased reliability and redundancy by allowing terminals logically connected to a failed host to access other hosts on the LAN.
- Terminal request management — The server eliminates terminal blocking (a limitation of data switches) by managing multiple terminal requests logically instead of physically. The LAT software allows the terminal server to effectively multiplex many terminal access requests over a single physical line.
- Terminal connection management — Users can establish a logical connection (session) to a service node. Users request a connecttion to the services offered rather than to the node itself. All the standard system utilities and applications supported by the node are available to the user.
- Security — The server provides multiple levels of security for terminal access to network hosts, preventing unauthorized users from accessing network resources.
- PC file transfer — poly-XFR file transfer for IBM personal computers.

LAN Configuration Using Terminal Servers

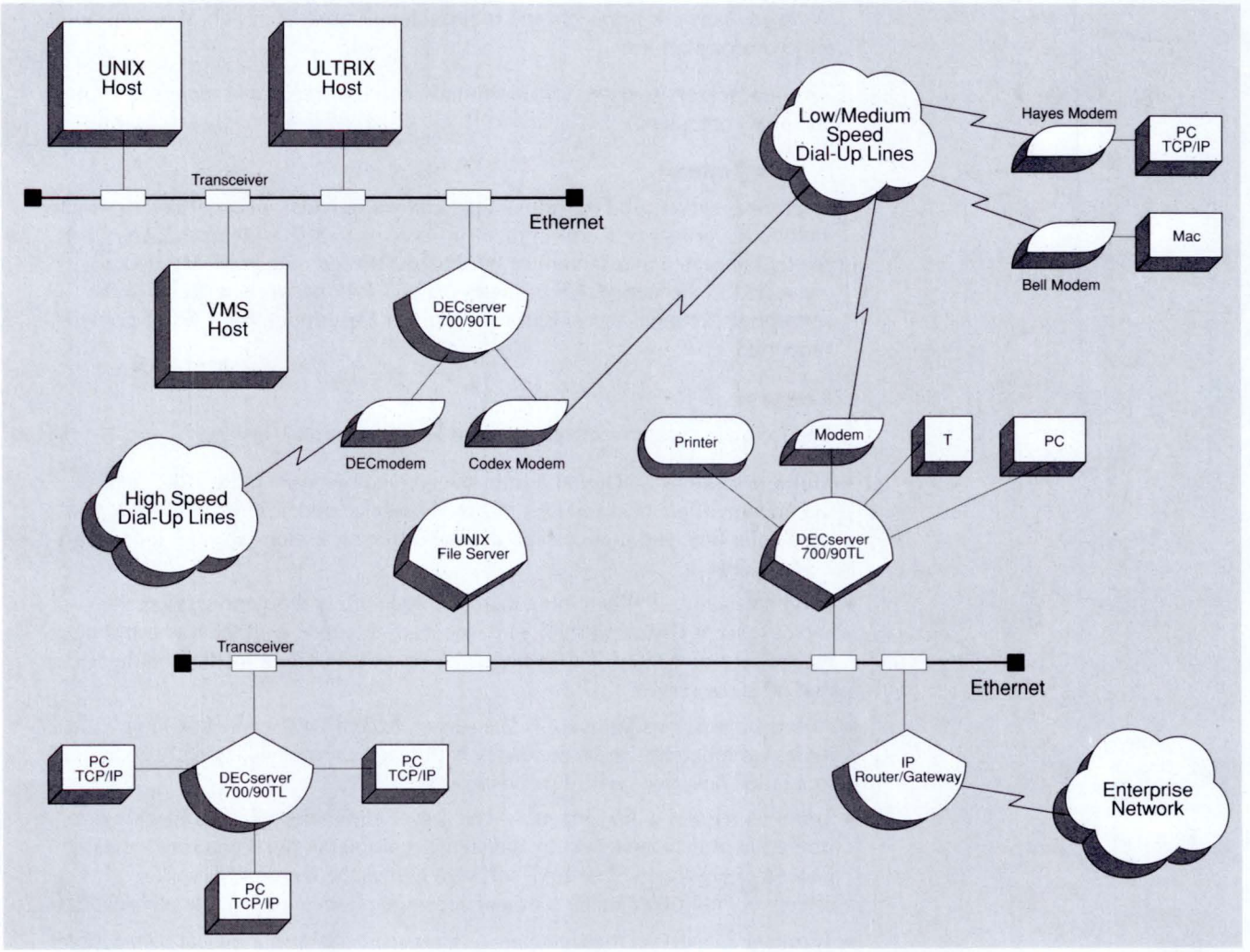

TBG-181–00

DECserver 700



The DECserver 700 exceeds the price/performance of its predecessors: the DECserver 200, the DECserver 300 and the DECserver 500/550. This Ethernet communications server is a result of a major change in component technology and engineering strategy to design products that adapt new network applications through software enhancements and customer-installable hardware upgrades. DECserver software functionality demonstrates Digital's commitment to "open" network protocols and to provide information system solutions across multivendor platforms. The implementation of TCP/IP, SLIP, Telnet, and SNMP (also OSI in the future) on the new DECserver 700 platforms further demonstrates Digital's commitment to our DECnet customers who prefer the Internet protocol suite as an alternative migration path to Open System Interconnect standards.

The DECserver 700 replaces both the DECserver 200 and the DECserver 300 models. DECserver 700 is also the preferred solution to the DECserver 550.

The DECserver 700 is less than half the size of its predecessors. It can adapt to standard 19-inch rack space and be stacked regardless of spacing and airflow due to its design that receives and exhausts air through louvers at the edges of the cover. Low noise and heat dissipation allow for simple desktop installation in standard office environments.

Features

- An 8-port (full modem control) model and a 16-port (limited modem control) model.
- Superior performance — 115.2 Kb/s per port speeds, 215,000 cps aggregate throughput.
- Complete TCP/IP support — Telnet, Serial Line Internet Protocol (SLIP), manageable through SNMP.
- Expandable platform — 1 to 8 MB of user-installable memory to support future protocols and applications.
- "All media" connection strategy — thick wire (AUI), ThinWire, unshielded twisted-pair (10BaseT).

Management Options

The DECserver 700 can be managed by using Digital's current LAN management tools, such as the Terminal Server Manager (TSM) and its DECmcc counterpart, the Terminal Server Access Module (TSAM). These products allow a network manager to control and observe servers anywhere in an extended local area network. Management capabilities include configuring individual port or multiple port characteristics, such as access privileges for LAN services (group coding), automatically updating the DECnet database with information about all servers on the network, and setting up command files that can execute parameter setup functions on single and groups of servers automatically. ▲ Refer to Software Product Description 27.64.xx and 31.26.xx for details.

Simple Network Management Protocol and Remote Telnet Console

The DECserver 700 can be managed using the SNMP GET and GETNEXT commands for accessing general system-level information such as hardware and software version numbers, location, server name, routing table information, and status of data links (including the Ethernet interface and active SLIP sessions).

The Remote Telnet Console allows a privileged user to log on to a particular server through a Telnet connection and use the local management capabilities available through the server's user interface.

All of the above management tools are offered on DECmcc management platforms (VMS and ULTRIX operating systems). ▲ Refer to Software Product Description 38.73.00 for details.

Personal Computers — Internet Network Nodes Through SLIP

SLIP, the Serial Line Internet Protocol, allows personal computers or any other computer running TCP/IP and SLIP software to connect to the network through a serial connection to the DECserver 700. SLIP is a framing technique used for encapsulating network traffic across the serial connection. The DECserver 700 performs like a router/gateway passing packets to a serially-connected "end node." This SLIP implementation offers automatic session start-up and IP address learning, SNMP monitoring, and optional password protection on each SLIP connection. This hardware platform with its superior throughput and line speed specifications makes it an ideal, low-cost solution for local and remotely connected personal computers. A single DECserver 700 Ethernet address can support all 16 ports as IP addresses, minimizing the need for additional network topology administration and costly PC LAN implementations.

Personal computers can easily access network resources, performing efficient file transfer and virtual terminal operations.

Multivendor Load Host Support

The DECserver 700 software is available on the most popular distribution media (5.25-inch floppy, TK-tape cassettes, CD-ROM, etc.) for VMS, ULTRIX, UNIX, SCO UNIX, and MS-DOS hosts. The Open Advantage characteristics of this platform are evidenced by its ease of use in multivendor environments.

Specifications	
Physical Characteristics	
Height	4.44 cm (1.73 in)
Width	44.62 cm (17.4 in)
Depth	28.46 cm (11.1 in)
Weight	3.18 kg (7 lbs)
Environmental Class	C (Refer to Appendix C for details.)

Prerequisite Hardware

A VAX host, a personal computer running MS-DOS, or an ULTRIX or UNIX host

Prerequisite Software

DECserver 700 V1.0 software

Recommended Software

- Terminal Server Manager
- TCP/IP Software (including SLIP Protocol) for DOS, OS/2

- DECmcc with TSAM
- PATHWORKS for DOS, Client

Ordering Information

The DECserver 700 software license is included with the hardware. Refer to the order codes for connection accessories and country kit information.

DECserver 700 Order Codes	
Option	**Order Code**
DECserver 700, 8 EIA-RS232 lines w/DB25 connectors for full modem control, 1 MB memory, accessory kit, software license, manual, power cord.	+DSRVW-A*
DECserver 700, 8 EIA-RS232 lines w/DB25 connectors for full modem control, 1 MB memory, accessory kit, software license.	+DSRVW-B*
DECserver 700, 16 EIA-RS232 lines w/8 modular jack connectors for RJ-45 signalling (8 wires), 1 MB memory, accessory kit, software license, manual, power cord.	+DSRVW-C*
DECserver 700, 16 EIA-RS232 lines w/8 modular jack connectors for RJ-45 signalling (8 wires), 1 MB memory, accessory kit, software license.	+DSRVW-D*
Country Kits	DSRVW-**
DECserver 700 Software Kit VMS Load Host	QA-XA5AA-H#
DECserver 700 Software Kit ULTRIX VAX Load Host	QA-XA5AB-H#
DECserver 700 Software Kit MS-DOS Load Host	QA-XA5AC-H#
DECserver 700 Software Kit UNIX Load Host	QA-XA5AD-H#

\+ Replace the + with DL- when unit is ordered with the system.

* Replace the * with A when ordering a quantity of one, or with M when ordering a Multipack of 10.

** Replace the ** with one of the following codes: KA (United States, Canada), KD (Denmark), KE (United Kingdom, Ireland), KG (Germany, Austria), KI (Italy), KJ (Japan), KT (Israel), KZ (Australia, New Zealand), LJ (India, S. Africa), MA (Belgium, Finland, France, Holland, Norway, Spain, Sweden), MB (Switzerland).

\# Media Type. Refer to Section 5, "Introduction," for a list of media types.

DECserver 700 Desktop Connection Accessories	
Option	**Order Code**
MP8-to-MMJ Adapter	H8584-AA
MJ8-to-DB25 Adapter (Low-Speed)	H8585-AB
MJ8-to-DB25 Adapter (High-Speed)	H8585-AC
MJ8-to-DB9 Adapter	H8585-AA
AUI-to-ThinWire Media Access Unit (MAU)	DW29-AA

DECserver 90TL Telnet/LAT Terminal Server

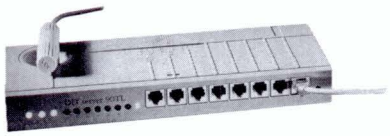

Designed for high-speed asynchronous connections to UNIX, ULTRIX, VMS, DOS, and multivendor network services, the DECserver 90TL delivers the performance of a midrange terminal server in a compact, low-cost module. This 8-port multi-session Telnet/LAT terminal server offers industry-standard connections at speeds up to 57.6 Kb/s. It supports TCP/IP, Telnet, LAT, and SLIP protocols and several remote management systems.

As part of the award-winning WorkGroup Family of Networking Products, the DECserver 90TL brings a unique flexibility to networking. Designed for office environments, it can be used standalone for small workgroups, or combined with other modules in the DEChub 90 to connect dozens of terminals, printers, and PCs to large enterprise networks.

Features

- Multiprotocol capabilities — Supports Telnet, LAT, TCP/IP and SLIP protocols.
- Configuration flexibility — Operates standalone or in the DEChub 90.
- Investment protection — Features upgradeable software and memory.
- Network management — Manageable remotely using SNMP, Terminal Server Manager (TSM) V1.5, MOP Remote Console, and Telnet Remote Console.
- High speed — Supports high bandwidth asynchronous devices at speeds up to 57.6 Kb/s.
- Modem/printer/device control — Uses industry-standard MJ8 (RJ45-style) connections that provide data, DSR, and DTR signal capabilities.
- Efficient networking — Features front panel LEDs, on-demand font loading, and dedicated and preferred services.
- Enhanced security — Lets system managers assign group codes to restrict access to network services.

The DECserver 90TL provides asynchronous connections at speeds ranging from 75 b/s to 57.6 Kb/s. Its new terminal server software, also used with the DECserver 700 series, can be downline loaded from ULTRIX, UNIX, VMS, or MS–DOS (via PATHWORKS for DOS) operating systems using BOOTP/TFTP or MOP. The server software license is included with the DECserver 90TL.

To extend your networking capabilities, the DECserver 90TL operates with a variety of protocols. Its TCP/IP-Telnet and Domain Name Service (DNS) support provides multivendor connectivity and wide area terminal service. The server also uses LAT protocol, a highly efficient local area terminal service that accommodates a variety of host systems. LAT multiplexes sessions from many users on a virtual circuit message, allowing data to bypass session, transport, and routing layers of other protocols to make efficient use of Ethernet network.

The SLIP protocol distinguishes the DECserver 90TL from a regular terminal server. With TCP/IP-SLIP, the DECserver 90TL becomes a static IP end-node router for PCs connected to the serial ports. It provides TCP/IP communications to connect these PCs to each other and to any service on the network. These low-cost connections, via a telephone line and modem, are excellent for connecting branch operations that need only occasional access to the network.

The DECserver 90TL is directly manageable, standalone or in the hub, in a multivendor network environment. System managers can collect information about the server using SNMP or MOP, which are integral to the server, and management stations from Digital or other vendors. Terminal Server Manager (TSM) V1.5, Telnet Remote Console, and MOP Remote Console are useful for checking status or reconfiguring the server remotely.

The DECserver 90TL provides connections to most modems, printers, and other devices with both data leads and DSR/DTR signals. By properly configuring a modem, these signals are usually sufficient for most applications. Public telephone regulations in some countries may require more signals.

With one DECserver 90TL, users can simultaneously access 64 different sessions operating under a mix of protocols. This increases productivity by minimizing the need to log in and out of sessions. The DECserver 90TL supports Terminal Device/Session Management Protocol (TD/SMP), which provides the multi-session protocol for running multiple sessions concurrently on VT420 and other TD/SMP-supported terminals.

For added security, the DECserver 90TL lets system managers dedicate a port to just one service or assign group codes to restrict access to network services. Its preferred service feature simplifies connection to a frequently-used service while providing access to other services. The DECserver 90TL also offers on-demand font loading, especially useful for terminals that require dynamic font capabilities.

The DECserver 90TL protects networking investments in several ways. Its downline-loadable software and upgradeable memory capacity provide an easy expansion path. A single DECserver 90TL provides a low cost of entry. As a network grows, the same module that is used standalone can be placed in the DEChub 90. Eight DECserver 90TL modules in the hub provide 64 connections; two daisy-chained DEChub 90 units can support 128 connections. By combining the DECserver 90TL with repeaters, bridges, LAT-only terminal servers, and management modules in the DEChub 90, users can benefit from the full range of WorkGroup Family products, which have received international recognition for their advanced design and ease of use.

Specifications	
Dimensions	
Height	3.2 cm (1.3 in)
Width	27.9 cm (11.0 in)
Depth	14.0 cm (5.5 in)
Weight (without power supply)	.77 kg (1.7 lbs)
Transmission Characteristics	
Input connectors	ThinWire BNC for Ethernet
	8 MJ8 (RJ45-style) for asynch lines
Baud rates	Autobaud or user-selectable from 75 b/s to 57.6 Kb/s
Characters	7 or 8 bit characters, 1 or 2 stop bits
Parity	None, even, odd, space, mark
Flow control	XON/XOFF or DSR/DTR
Control signals	2-wire — DSR/DTR
Environmental Class	C (Refer to Appendix C for details.)

Order Information

The server software license is included with the DECserver 90TL purchase.

DECserver 90TL Order Codes	
Option	**Order Code**
DECserver 90TL for Standalone Use	
DECserver 90TL (includes power supply)	+–DSRVE–**
Hub–based DECserver 90TL	
DECserver 90TL	+–DSRVE–MA
To convert hub–based DECserver 90TL to a standalone unit:	
120V power supply	H7082–AA
240V power supply with IEC connection	H7082–AB
Rear module cover	H0342–AA
DECserver 90TL media and documentation kit (VMS)	QA–MJPAA–H#
DECserver 90TL media and documentation kit (ULTRIX)	QA–MJPAB–H#
DECserver 90TL media and documentation kit (DOS	QA–MJPAC–H#
DECserver 90TL media and documentation kit (UNIX	QA–MJPAD–H#

\+ Prefix the order code with DL- to order quantities of 24 units.

** Replace the ** with one of the following codes: KA (United States, Canada), KD (Denmark), KE (United Kingdom, Ireland), KG (Germany, Austria), KI (Italy), KJ (Japan), KT (Israel), KZ (Australia, New Zealand), LJ (India, S. Africa), MA (Belgium, Finland, France, Holland, Norway, Spain, Sweden), MB (Switzerland)

\# Media Type. Refer to Section 5, "Introduction," for a list of media types.

DECserver 90L+



The DECserver 90L+ is a feature-enhanced LAT terminal server for 802.3/Ethernet local area networks. It is one of the latest additions to Digital's WorkGroup Family of Networking Products. This compact modular terminal server can be used as a standalone unit or combined with other WorkGroup products in the DEChub 90.

This product replaces the DECserver 90L. It adds many software enhancements. Its high throughput delivers optimal line speed capabilities, up to 38.4 Kb/s, for eight interactive terminals, serial printers, and PCs (in terminal emulation mode). It is ideal for connecting users in a small workgroup or in a large enterprise network.

The DECserver 90L+ can connect up to four different services per port. It provides both dedicated and preferred services to accommodate single or specific connections. The dedicated service feature allows a port to be connected to only that service name specified by the system manager. The preferred service feature allows a user to predefine a frequently-used service and, thereafter, to connect to that service without specifying its name.

In addition, the DECserver 90L+ offers basic session management and security features. For example, if a terminal is powered off while sessions are still active, the terminal server will disconnect the session on the host, preventing other users from accessing another individual's session. If a printer is powered off, the DECserver 90L+ can notify and stop the print queue on the host system, preventing print jobs from being lost.

Also featured are diagnostic and management capabilities, including the ability to examine and modify the server and port parameters.

Features

- Multisession support — Each port can initiate up to four sessions.
- Provides dedicated and preferred services.
- Features command line recall and editing.
- Network management — Supports Terminal Server Manager (TSM) and its DECmcc counterpart, the Terminal Server Access Module (TSAM). for configuring, monitoring, and management.
- Allows user to initiate connection to any device supporting the MOP console carrier.
- Easy to use — Features simple commands, preset parameters, and menu-driven setups.
- Plug-and-play — Supports autobaud; comes factory configured for immediate use.
- Built-in ROM-based software eliminates the need to downline load server software from a host system.
- Ease of management — Front panel LEDs indicate status of power, self-test, network connection, and data flow.
- Compact size — Designed for workgroups and office environments, the DECserver 90L+ uses minimal wall or desk space.
- Connects terminals and serial printers using session management and security. Innovative circuitry disconnects all sessions when an asynchronous device is powered off.

- Supports LAT protocol — Performs in widely supported Ethernet environments to provide efficient connections to network services.
- Fast connections — Learns and remembers available network services; provides nearly instantaneous connections.
- Printer support — Supports XON/XOFF, and distributed LAT queuing.
- Port customization — Users can set port name, speed, flow control, device type, and action on break. Port characters can be set remotely.

Configuration Information

The DECserver 90L+ has an integral BNC for connection to ThinWire Ethernet and a connector for insertion into the DEChub 90.

Users can easily connect up to eight asynchronous devices to the MMJ jacks and immediately have communications in operation, without complicated configuration setups or software expertise. Up to eight DECserver 90L+ modules can be snapped into the DEChub 90 backplane to provide 64 connections for terminals and printers, and PCs in terminal emulation mode.

Specifications	
Physical Characteristics	
Height	3.2 cm (1.25 in)
Length	27.9 cm (11 in)
Depth	14.0 cm (5.5 in)
Weight	1.36 kg (3 lbs)
Transmission Characteristics	
Input connectors	ThinWire Ethernet and 8 MMJ jacks
Resident Firmware	LAT
Baud rates	User-selectable from 1.2 to 38.4 Kb/s
Parity	8-bit characters; 1 stop bit; no parity
Protocol	XON/XOFF
Power Requirements	
Current	+5 Vdc from ac line transformer
Environmental Class	C (Refer to Appendix C for details.)

Ordering Information

DECserver 90L+ Order Codes	
Option	**Order Code**
DECserver 90L+ for Standalone Use	
DECserver 90L+	*-DSRVG-**
Hub-based DECserver 90L+	
DECserver 90L+ for use with DEChub 90	*-DSRVG-MA
120 V power supply with internal power connection	H7082-AA
240 V power supply with IEC connection	H7082-AB
Snap-on cover for DEChub 90 model of DECserver 90L+	H0342-AA

* Prefix the order code with DL- to order quantities of 24 units.

** Replace the ** with one of the following codes: AA (United States, Canada, Japan), AD (Denmark), AE (United Kingdom, Ireland), AI (Italy), AK (Switzerland), AT (Israel), AX (Central Europe), AZ (Australia, New Zealand), BJ (India, S. Africa)

DECserver 250

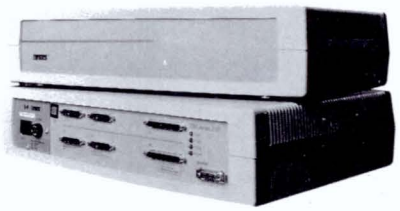

The DECserver 250 is a high-performance, full-function Ethernet-based server for both parallel and serial printers. The DECserver 250 provides the interface between two parallel interfaces (compatible with Data Product's parallel interface standard), four asynchronous EIA-232-D serial data communication channel, and a single IEEE 802.3/Ethernet local area network.

With the DECserver 250, parallel printer data is processed through dedicated 512 K character FIFO (first in/first out) buffers; each parallel port has its own buffer. Serial data for three ports is restricted to printer support only; inbound modem control and terminal characteristics sets have been restricted on these serial ports to enhance the overall DECserver 250 printer support.

One serial port is available with full functionality for EIA-232-D communication, including modem control. All serial ports offer dedicated 512 K character buffers.

The two parallel ports can support line printers operating at speeds up to 2,000 lines per minute (lpm) and are compatible with Digital standard cabling for parallel line printers, such as the BC27A and LLF01/BN25J.

The serial ports operate at their full rated speeds of up to 19.2 Kb/s on two ports and up to 9.6 Kb/s on the remaining two. Both parallel and serial ports can be accessed at their rated speeds; however, the DECserver 250's overall performance is a factor of CPU and network utilization.

Features

- Independent host eliminates CPU/printer one-for-one connection and increases user access to printers. It also increases printer uptime, as it is not tied to one CPU, and increases CPU availability for other jobs.
- Parallel ports support up to 2,000 lines per minute, permitting time-critical printing applications.
- Distributed printing provides greater sharing of printers.

- Support of multiple printers, both parallel and serial, provides a cost-effective solution for printer connection.
- Configuration flexibility allows printers to be placed where needed — in an open office or a computer room.

Specifications	
Physical Characteristics	
Height	11.75 cm (4.63 in)
Width	48.90 cm (19.25 in)
Depth	32.07 cm (12.63 in)
Weight	5.44 kg (12 lb)
Environmental Class	C (Refer to Appendix C for details.)

Prerequisite Hardware

- Either an 802.3/Ethernet transceiver, a DELNI, or DESTA and a transceiver drop cable
- VAX or ULTRIX load host CPU on the same Ethernet, to enable downline loading of the software

The DECserver 250 supports the following hardware:

- Parallel printers
  - LG01, LG02 (with firmware V3.0)
  - LP27 (except -DA/DB models and -2A and -2B variations), LP29, LP37
  - LP25, LP26
  - LXY12, LXY22
- Serial printers
  - LA50, LA75, LA100, LA120, LA210
  - LN03, LN03R, LN03S, LJ250
  - LP25S, LP26S
  - LG01-DA, LG02-DA, LG31
  - LCG01, LXY12-DA, LXY22-DA
  - LA50, LA75, LA100, LA120, LA210, LN03, LN03R, LN03S, LJ250 (EIA-232-D only)
- Terminals (one port only)
  - VT100 Series
  - VT200 Series
  - VT300 Series
- DF112/DF124/DF224/DF242 full-duplex asynchronous modems

Prerequisite Software

- VMS, V4.7
- DECnet-VAX, V4.7
- ULTRIX V2.0 (with Maintenance and Operations Protocol installed)
- DECserver 250, VMS or ULTRIX V1.0 (license included with hardware)

▲ Refer to the applicable Software Product Description for more information.

Ordering Information

The DECserver 250 software license is included with the hardware. Media kits are purchased separately. Use the following order code table to order the specific cable.

DECserver 250 Order Codes	
Option	**Order Code**
DECserver 250, parallel/serial, 120 V, with software license	DSRVP-AA
DECserver 250 with new system or system upgrade, 120 V	DL-DSRVP-AA
Printer Cables	
Null-modem cable for local printer or terminal connection; provides connection to 25-pin EIA-232-D terminal port	BC22D
Full modem straight-through cable for modem connection	BC22E/F
Null-modem cable for host systems or other devices that do not use CTS/RTS flow control	BC17D

MUXserver 320/380 and DECmux 300 Remote Terminal Server

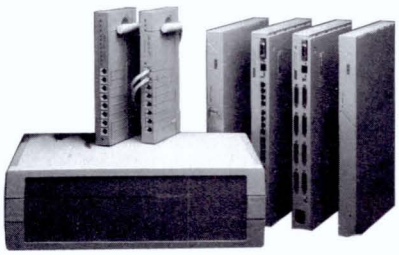

The MUXserver 320/380 and the DECmux 300 Remote Terminal Server connect remote asynchronous terminals, serial printers, modems, and LAT independent hosts via a pair of modems and a leased phone line to an 802.3/Ethernet local area network. The MUXserver connects to the LAN and functions as a terminal server for remote devices. The DECmux 300 connects devices at the remote site and functions with the MUXserver as a statistical multiplexer to send data to the LAN. Phone costs are minimized since multiple users share one phone line.

The MUXserver is available in two versions: The MUXserver 380 connects up to 128 remote users and the MUXserver 320 connects up to 32 remote users. The MUXservers 320 and 380 provide both Telnet and LAT support, and they can connect to any DECmux 300 models. ▲ Refer to "Terminal Server Overview" in this section for MUXserver features.

Specifications

Physical Characteristics	MUXserver 320/380 (DSRZE/DSRZD)	DECmux 300 (DM3xx)
Height	16.1 cm (6.35 in)	16.1 cm (6.35 in)
Width	49.3 cm (19.4 in)	49.3 cm (19.4 in)
Depth	31.2 cm (12.3 in)	31.2 cm (12.3 in)
Weight		
DSRZE	6.0 kg (13.2 lb)	7.4 kg (16.3 lb)
DSRZD	8.1 kg (17.1 lb)	
Power Requirements		
Low-range line voltage	100 Vac to 120 Vac (-*A versions)	
High-range line voltage	200 Vac to 240 Vac (-*B versions)	
Frequency tolerance	50 to 60 Hz	50 to 60 Hz
Maximum ac watts drawn	110 W	180 W
Maximum heat dissipation	375 Btu/hr	614 Btu/hr
Environmental Class	C (Refer to Appendix C for details.)	

Configurations

A single MUXserver 320 can

- Provide connection for remote users to Telnet and LAT services
- Link up to 32 devices actively to the Ethernet LAN
- Accept up to two phone links — one line up to 64 Kb/s and one line up to 19.2 Kb/s, with a total aggregate line speed of 64 Kb/s
- Connect up to six DECmux 300s, with up to three DECmux 300s daisy-chained on one phone line link

A single MUXserver 380 can

- Provide connection for remote users to Telnet and LAT services
- Link up to 128 devices actively to the Ethernet LAN
- Accept up to eight phone links — two lines up to 64 Kb/s and six lines up to 19.2 Kb/s, with a total aggregate line speed of 128 Kb/s
- Connect up to 16 DECmux 300s, with up to three DECmux 300s daisy-chained on each phone line link

A single DECmux 300 can

- Connect up to 8, 16, 24, or 32 remote devices
- Be daisy-chained via cable or phone link to a second and third DECmux 300
- Connect dial-up modems through EIA-232-D user ports
- Support connections to LAT independent hosts through EIA-232-D user ports
- Provide OPEN DECconnect wiring on EIA-423-A user ports

MUXserver 380 and DECmux 300 Configuration

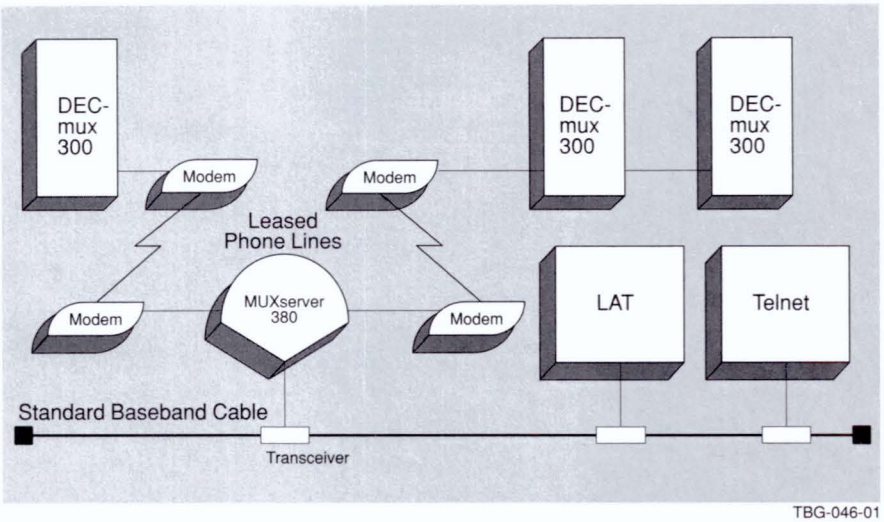

TBG-046-01

Prerequisite Hardware

- One MUXserver 320 with up to six DECmux 300s or one MUXserver 380 with up to 16 DECmux 300s, plus user port cables
- One 3002 or equivalent leased phone line and one pair of external modems and cables, where needed
- All 802.3/Ethernet physical channel hardware
- An 802.3/Ethernet transceiver, DESTA, or DELNI and transceiver drop cable

Prerequisite Software

- MUXserver software must be downline loaded from either a DECnet VAX or ULTRIX load host
- For service node support, one of the following operating systems is required:

  VMS or ULTRIX

Ordering Information

- For MUXserver 320/380, refer to Software Product Description 32.94.00 (UPI YWLAA) for VMS load host and SPD 32.94.00 (UPI YWLAB) for ULTRIX load host.
- Terminal Server Manager optional software supports the MUXserver 320/380. For more information, refer to Terminal Server Manager in this section.
- The 8-channel and 16-channel expansion boards for DM308-Ax and DM316-Bx variations are used to create 24-channel versions for DECmux 300 or to upgrade existing installations.
- Order the appropriate country kit for any 240 V version only.

MUXserver and DECmux 300 Hardware Order Codes	
Option	**Order Code**
32-channel MUXserver 320 Telnet LAT support, 120 V, includes country kit and license	DSRZE-AA
128-channel MUXserver 380 Telnet LAT support, 120 V, includes country kit and license	DSRZD-AA
8-channel EIA-232-D DECmux 300, 120 V, includes country kit	DM308-AA
16-channel EIA-232-D DECmux 300, 120 V, includes country kit	DM316-AA
16-channel EIA-423-A DECmux 300, 120 V, includes country kit (order two H3104-B kits separately)	DM316-BA
32-channel EIA-423-A DECmux 300, 120 V, includes country kit (order four H3104-B kits separately)	DM332-BA
32-channel MUXserver 320 Telnet LAT support, 240 V (order country kit separately)	DSRZE-AB
128-channel MUXserver 380 Telnet LAT support, 240 V (order country kit separately)	DSRZD-AB
8-channel EIA-232-D DECmux 300, 240 V (order country kit separately)	DM308-AB
16-channel EIA-232-D DECmux 300, 240 V, (order country kit separately)	DM316-AB
16-channel EIA-423-A DECmux 300, 240 V, (order country kit and two H3104-B kits separately)	DM316-BB
32-channel EIA-423-A DECmux 300, 240 V, (order country kit and four H3104-B kits separately)	DM332-BB
8-channel EIA-232-D expansion board for DM308-Ax and DM316-Bx	CK-DM308-A7
16-channel EIA-423-A expansion board for DM308-Ax and DM316-Bx (order two H3104-B kits separately)	CK-DM316-W7
Country Kits (240 V versions only)	DM300-**

** Replace the ** with one of the following codes: KZ (Australia, New Zealand), MA (Belgium, Finland, France, Holland, Norway, Spain, Sweden), KD (Denmark), KG (Germany) LJ (India), KT (Israel), KI (Italy), KJ (Japan), MB (Switzerland), KE (United Kingdom)

Required Cables

To configure the MUXserver 320/380 and DECmux 300, order the following cables as needed:

Required Cables for MUXserver 320/380 and DECmux 300 Configuration

Cable	Order Code
EIA-423-A cable concentrator kit: order two for DM316-B* or CK-DM316-W7; order four for DM332-B*	H3104-B
EIA-423-A cable to connect terminal or printer to cable concentrator on DECmux 300 EIA-423-A versions	BC16E
Connects terminal or printer to DECmux 300 EIA-232-D user port	BC22D
Full modem 16-wire cable connects modem to DECmux 300 EIA-232-D user port	BC22E
Full modem 25-wire cable connects modem to DECmux 300 EIA-232-D user port	BC22F
Connects host systems and devices using CTS/RTS flow control to DECmux 300 EIA-232-D user port	BC22R
Connects host systems and devices that do not use CTS/RTS flow control to DECmux 300 EIA-232-D user port	BC17D
EIA-232-D cable connects MUXserver 320/380 to modem or connects DECmux 300 to modem for analog leased phone line link	BS19D-02
V.35 cable connects MUXserver 320/380 or DECmux 300 to DSU/CSU for digital leased phone line link	BC19F-02
EIA-422 cable connects MUXserver 320/380 to DECmux 300, or connects two DECmux 300s together	BC19Y-10

Note: MUXserver 320 has one 50-pin port and one 25-pin port for phone link connections. One BS19D-02 adapter cable is shipped with the DSRZE for connecting EIA-232 modems on the 50-pin port. Order BC22F cables to connect modems to the 25-pin ports. MUXserver 380 has two 50-pin ports and six 25-pin ports for phone link connections. Two BS19D-02 adapter cables are shipped with the DSRZD for connecting EIA-232 modems on the 50-pin ports.

Terminal Server Manager (TSM)

The Terminal Server Manager (TSM) VMS software allows a network manager at a VAX VMS host to control and observe terminal servers anywhere in an extended local area network. TSM allows the manager to configure, monitor, and control Digital's family of terminal servers.

TSM integrates the functions of NCP TSC and DSVCONFIG in a product that allows the use of command files to help automate terminal server management. TSM exceeds the capabilities of NCP CONNECT in both configuration- and fault-management.

Features

- Allows a manager to group terminal servers based on server type, floor location, or department. Commands can be executed on a portion or on all servers, saving time.
- Automatically updates the DECnet database with information about each terminal server on the network, allowing easy access to all servers by name rather than LAN address.
- Allows generic command files to operate on a single, group, or all servers in the network, saving time and providing flexibility.
- Tests LAT printers that are set up with LATCP and informs the manager of any printer queue setup or hardware problems.
- Automatically produces a command file configuration template containing parameters from a selected terminal server on the network.
- Can log all screen output to a specified file for review; useful for saving counters and error information.
- Measures round trip delay from host to server or servers; useful in diagnosing synchronous line bridge problems.
- Provides automatic TSM command files to perform common server setup functions such as those used for modem ports, printer ports, and reverse-LAT ports.
- Allows the manager to assign commonly used TSM commands to keyboard keys, then execute the command by pressing the key.

Terminal Server Manager Configuration

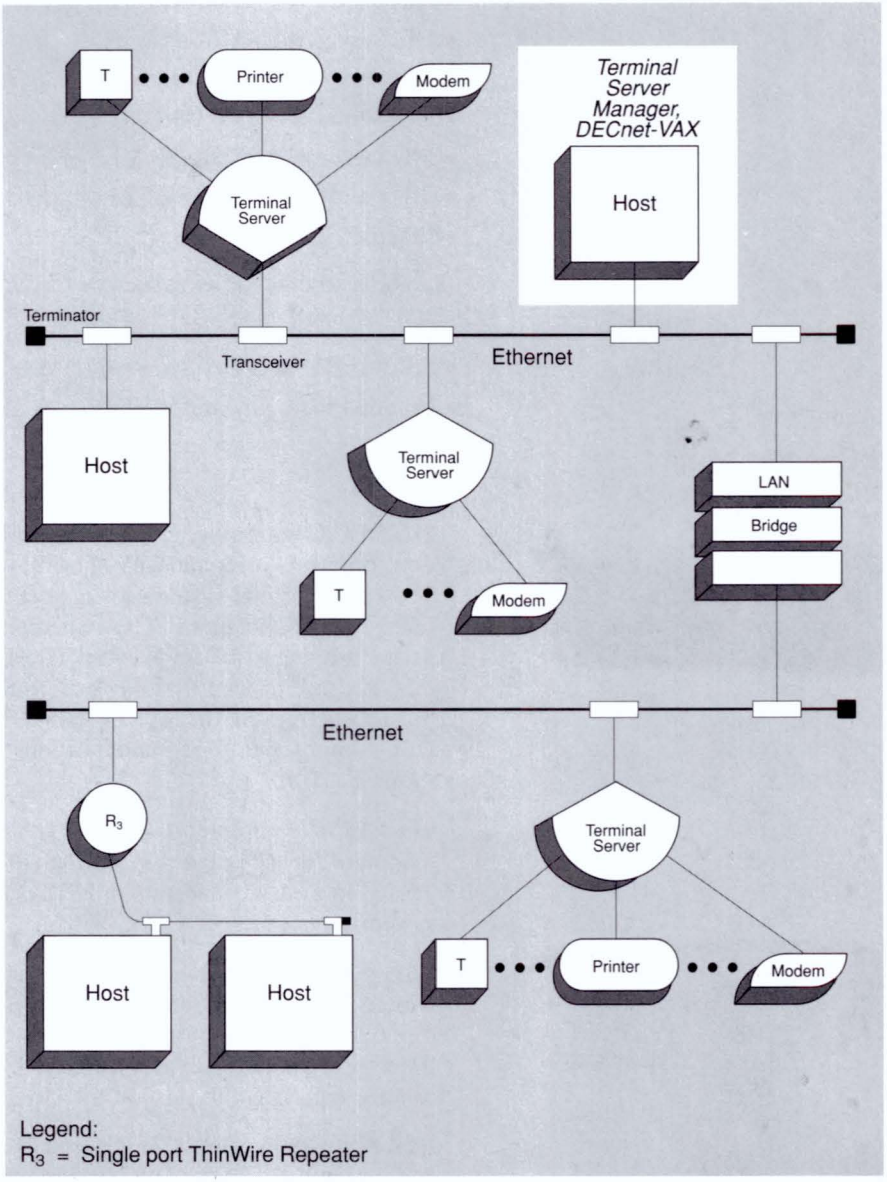

TBG-047–00

Prerequisite Hardware

TSM runs on any VAX processor except the MicroVAX I, VAXstation I, or VAX-11/725

Prerequisite Software

- VMS, V5.0 or later. Classes required for fully functional product are Base, DRVR, NET, PROG, and UUTIL
- DECnet-VAX, V5.0 or later

Supported Terminal Servers

- DECserver 700 (DSRVW) V1.0 or later
- DECserver 90L+ V1.0 or later
- DECserver 90TL V1.0 or later
- DECserver 500/550 (DSRVS) V1.0 or later
- MUXserver 320 (DSRZE) V1.0 or later
- MUXserver 380 (DSRZD) V1.0 or later
- Ethernet Terminal Server (DECSA) V2.1 or later

▲ Refer to the following sources for further information on supported processors and services.

- Software Product Description 27.64.00
- Unique Product Identifier VDH

DEC Commserver (DSPAA/DSPAB)



The DEC Commserver DSPAA and DSPAB are servers that solve communications problems using industry-specific protocols in a wide range of applications. They allow Digital systems to connect to Market Data Feeds such as Telerate International Quotations (TIQ), Standard and Poor's Tickers III and IV, and Reuter's Integrated Data Network (IDN). The DEC Commserver can also interface to Financial Systems such as S.W.I.F.T. and CHIPS, and market broadcasts from SIAC, NYSE, NASD. Military and government users can use the DEC Commserver for communications connections to ADCCP NRM, and ADCCP ABM.

The DEC Commserver is the ideal solution for customers with special protocol requirements because of its "off-the-shelf," point-to-point connectivity options. This allows easy connection to HDLC, X.25, 3270, and 2780/3780 third-party systems.



With the DEC Commserver, Digital can provide single-source integration of widely-accepted products from Simpact Associates. The inclusion of the Simpact 4-line Intelligent Communications Processor and the 12-line Communications Expansion Module provides the DEC Commserver with 16 lines in a rackmount or table top system the size of the DEC Microserver.

Included with the DEC Commserver is software that provides transparent connection between the DEC Commserver hardware and the VMS host. With a choice of 13 protocol packages developed by Simpact for Digital, a wide range of industry-specific communication solutions are "off-the-shelf."

Also available is the DEC Commserver 150 for larger line configurations. It has the same features as the smaller DEC Commserver 100 except that it has more Q-bus slots (10) and can support up to 80 synchronous lines in a rackmount or pedestal system.

Performance

The DEC Commserver DSPAX-AA option supports four lines with line speeds up to 64 Kb/s. The maximum throughput on all four lines is 19.2 Kb/s. The performance throughput of individual protocols may be less. ▲ Refer to Software Product Description 33.21.00 for details.

The DEC Commserver DSPAX-CA is a 12-line expander module. This option is used with the DSPAX-AA option, and together they provide 16 communication lines. By using five DSPAX-AA/DSPAX-CA option pairs, up to 80 lines can be supported in the Commserver Model 150. Line speed and performance of individual protocols running on the DSPAX-CA may vary with the protocol.

The transport limit between one VMS host and one DEC Commserver is the equivalent of 80 lines at 9.6 Kb/s. Additional servers may be added up to the available bandwidth of the Ethernet link.

Up to 31 DEC Commservers may be connected to a VMS host. In addition, each DEC Commserver can be connected to 31 VAX systems. The minimum requirement in multihost configurations is one line per host. Up to eight protocols can be supported in one DEC Commserver. Only one protocol is supported per DSPAX-AA option. (A DSPAX-AA or DSPAX-CA supports one protocol.)

Features

- Provides software transparent host/server connections.
- Two models to fit small-to-large line (4 to 80) configurations.
- Integral CPU/Memory/Ethernet Interface (KA640).
- Connects to both thick wire and ThinWire Ethernet cabling systems.
- Supports the Simpact Associates ICP1622T and EXC1612T options.

Specifications

	DEC Commserver 100	**DEC Commserver 150**
Enclosure	Small	Large
Q-bus Slots (available)	2	10
Physical Characteristics (with plastic)		
Height	16.2 cm (6.4 in)	69 cm (27 in)
Width	49.3 cm (19.4 in)	53 cm (21 in)
Depth	31.3 cm (12.3 in)	69 cm (17.8 in)
Weight	8.1 kg (18 lb)	39.5 kg (85 lb)
Power Requirements		
Voltage (nominal)	120 Vac or 240 Vac	120 Vac or 240 Vac
Frequency (nominal)	60 Hz or 50 Hz	60 Hz or 50 Hz
Phases	1	1
Current (max)	1.8 A or 1.1 A	10.2 A or 4.7 A
Cooling requirements	4.27 Btu/hr (min)	8.47 Btu/hr (min)
Environmental Class	A (Refer to Appendix C for details.)	

Refer to the following Order Code tables to configure systems. For example, a 4-line Telerate protocol DEC Commserver would consist of all of the following:

DSPAA-AA	DEC Commserver 100
DSPAX-AA	DEC Commserver Comm Option
CK-DSPAX-AA	Comm Option I/O Panel
H3132-AA	Comm Option Panel Bracket
QA-GCQAA-H5	DEC Commserver for VMS TK50 kit
QL-GD4AL-2B	DEC Commserver TIQ
QL-GD4A9-QB	
AA-DE9EA-TE	

For help with configurations in the United States, call 1-800-832-6277.

DEC Commserver Hardware Order Codes

Option	Description	Order Code
DEC Commserver 100	4 slot	DSPAA-AA
DEC Commserver 150	12 slot r/m	DSPAB-BA
DEC Commserver 150 (240 V)	12 slot r/m	DSPAB-BB
DEC Commserver 150	12 slot ped	DSPAB-CA
DEC Commserver 150 (240 V)	12 slot ped	DSPAB-CB
DEC Commserver Comm Option	ICP1622T	DSPAX-AA
DEC Commserver Comm Expansion	EXC1612T	DSPAX-CA
Comm Option I/O Panel	EIA-232	CK-DSPAX-AA
Comm Option I/O Panel	EIA-449	CK-DSPAX-AB
Comm Option I/O Panel	V.35	CK-DSPAX-AC
Comm Option I/O Panel for DSPAX-CA	EIA-232	CK-DSPAX-CA
Comm Option Panel Bracket	4 panels (max)	H3132-AA
Documentation		
DEC Commserver 100/150 User's Guide		EK-DSPAA-IN

DEC Commserver Software Order Codes		
Option	**License**	**Documentation**
DEC Commserver X.25	QL-GCSAL-2B	AA-PE93A-TE
DEC Commserver HDLC LAPB	QL-GCTAL-2B	AA-PE94A-TE
DEC Commserver ADCCP NRM	QL-GCUAL-2B	AA-PE95A-TE
DEC Commserver ADCCP ABM	QL-GCVAL-2B	AA-PE96A-TE
DEC Commserver BSC 2780/3780	QL-GCXAL-2B	AA-PE98A-TE
DEC Commserver BSC 3270	QL-GCYAL-2B	AA-PE99A-TE
DEC Commserver FMP	QL-GCZAL-2B	AA-PE9AA-TE
DEC Commserver AUTODIN	QL-GD1AL-2B	AA-PE9BA-TE
DEC Commserver IDN	QL-GD2AL-2B	AA-PE9CA-TE
DEC Commserver TIC 4	QL-GD3AL-2B	AA-PE9DA-TE
DEC Commserver TIQ	QL-GD4AL-2B	AA-PE9EA-TE
DEC Commserver S.W.I.F.T. & CHIPS	QL-GD5AL-2B	AA-PE9FA-TE
DEC Commserver DDCMP	QL-GD6AL-2B	AA-PE9GA-TE
DEC Commserver for VMS	QL-GCQA9-AA	AA-PE91A-TE
DEC Commserver for VMS TK50 kit		QA-GCQAA-H5
DEC Commserver for VMS MT9 kit		QA-GCQAA-HM
Documentation		
DEC Commserver for VMS Installation Guide		AA-PE92A-TE

Ordering Information

The DEC Commserver is packaged with a DEC Commserver software license, power cable, and user's guide. Communications options, media (TK50 or tape), and software protocol licenses are ordered separately.

Please use the 1-800-832-6277 (U.S.) hotline for help in configuring systems. Each protocol has specification limits for the number of lines, line speeds, and operation. ▲ To help understand the system and protocol operation, refer to the above documentation.

Digital offers a complete line of services for the DEC Commserver including full support of the Simpact hardware and software from your local office. Through the Digital Services Group, your DEC Commserver system can be customized to meet the specifications of your application. ▲ Refer to the following sources for further information on the DEC Commserver:

- DEC Commserver 100/150 flyer (EC-F0942-09)
- DEC Commserver for VMS Software Product Description 33.21.00 (AE-PEAJA-TE)
- *DEC Commserver for VMS User's Guide* (AA-PE91A-TE)

DEC ACCESSWORKS

DEC ACCESSWORKS is Digital's family of server products that provide multivendor client platforms with manageable access to multivendor information. DEC ACCESSWORKS provides a client/server integrated solution to a major problem that faces the industry today — the ability to access information across an enterprise, particularly from disparate desktops. Many organizations are attempting to solve this problem today by creating direct desktop-to-database connectivity, which is creating a massive management problem. Now you can provide a robust, manageable, cost-effective solution.

Today's DEC ACCESSWORKS products provide preconfigured, tested, and characterized functionality based on the proven, commercial strength of VAX VMS systems, and deliver the full range of benefits available with client/server computing, including flexibility and cost effectiveness.

Features

- Provides desktop access to DB2, IMS, VSAM, ORACLE, Rdb, RMS and other databases.
- Helps break the application backlog and improve the Return on Investment for PCs.
- Provides integrated solutions, broad capabilities and low entry prices.

DEC ACCESSWORKS includes Digital's new NAS packages. They are available today in seven packaged configurations on five targeted popular platforms, as shown in the following table:

DEC ACCESSWORKS Family

DEC ACCESSWORKS Package	Platform	NAS Package Included
DEC ACCESSWORKS 3130	MicroVAX 3100 model 30	NAS 200 Pilots/ Teams
DEC ACCESSWORKS 3180	MicroVAX 3100 model 80	NAS 200 Depart-ments/Workgroups
DEC ACCESSWORKS 4300	VAX 4000 model 300	NAS 300 Medium Groups/High I/O
DEC ACCESSWORKS 4500	VAX 4000 model 500	NAS 300 Medium/ Large Groups
DEC ACCESSWORKS 6610	VAX 6000 model 610	NAS 300 Maximum Performance
DEC ACCESSWORKS 4500HA	VAX 4000 model 500	NAS 400 Enterprise/ High Availability
DEC ACCESSWORKS 6610HA	VAX 6000 model 610	NAS 400 Enterprise/ High Availability

DEC ACCESSWORKS configurations provide core DEC ACCESSWORKS software (VAX Rdb/VMS, DECwindows Motif, CDD/Plus, and RMS Access) license, and Interactive read/write external database connects to both Rdb and RMS. In addition, the following server software is included in DEC ACCESSWORKS:

- Rdb, the SQL-based, relational database management system, handles general purpose, multiuser, centralized, or distributed applications
- PATHWORKS for VMS, Digital's Network Operating System, which supports DOS, Macintosh, OS/2 or Windows clients
- DECnet VAX and DEC TCP/IP Services for connection to DECnet and TCP/IP networks
- Additional software as defined in NAS 200, NAS 300 or NAS 400

High-Performance Data Access Options

DEC ACCESSWORKS offers high-performance database access with performance tuning tools and transparent access from SQL applications. Based on the industry-standard SQL database language, each desktop device can have either customized programs or products such as DECquery, dBASE IV from Ashton-Tate, Paradox from Borland, or Lotus 1–2–3 from Lotus Development Corporation. These products are designed to take advantage of client/server technology. A more comprehensive list may be found in Digital's RSVP catalog (#EA-D1596-45).

Database Connect Options

The following additional database connections can be added.

Database Option	Description
DEC ACCESSWORKS SNA	Read access to these IBM databases: DB2, VSAM and IMS with batch update to IMS (via VSAM).
DEC ACCESSWORKS SNA-ST	Same as above with access via ST gateway
DEC ACCESSWORKS SNA-CT	Same as above with access via CT gateway
DEC ACCESSWORKS SNA-Basic	Allows an DEC ACCESSWORKS Server to connect to another DEC ACCESSWORKS SNA gateway without repurchasing the gateway
ACCESS for ORACLE	Read access to ORACLE database on VAX, IBM (via TCP/IP) or UNIX platform

Note: The appropriate DEC ACCESSWORKS SNA connect option should be selected based on anticipated workloads. ▲ Refer to the latest DECnet SNA product information in Section 5 for assistance.

Data Store Option

When you need to consolidate disparate corporate data, DEC ACCESSWORKS can act as a centralized data store. You can roll up data from a number of sources into a single relational database. Third-party or IBM extraction tools let users consolidate information from IMS, VSAM, or other IBM based nonrelational database environments.

DEC ACCESSWORKS Data Store software option includes Rdb Development and VAX Data Distributor. It provides the ability (on demand or on a schedule) to extract and maintain data in the DEC ACCESSWORKS server, reducing the workload on host database servers and improving their efficiency while improving user response.

Interactive query and data storing can be used in conjunction to provide the fullest flexibility of data access.

Configuration Notes

Each system requires the addition of a console to boot the system. This can be a country-specific VT-100/200 compatible terminal.

VAX 6000 Model 610 DEC ACCESSWORKS requires the addition of an InfoServer 150 and associated country kit (part numbers SEACD-AA and SEAKC-xx) unless one is already resident on the local network.

Access to IBM DB2 databases by the DEC ACCESSWORKS SNA option requires the addition of an internal VAXBI (part number DWMBB-DA) to the VAX 6610 system.

Access to IBM DB2 databases requires VIDA Server software on the IBM host. This software (part numbers QL-VTXAX-xx and QA-VTXAA-xx) needs to be ordered unless already resident on the IBM host.

Access to IBM VSAM/IMS databases requires DTF software on the IBM host unless already resident.

- DTF for MVS:
  - Software License: QL-1GQA9-AA
  - Software Media: QA-1GQAA-**
  - Software Documentation: QA-1GQAA-GZ
  - Software Product Services: QA-1GQA*-**
- DTF for VM:
  - Software License: QL-GUYA9-AA
  - Software Media: QA-GUYAA-**
  - Software Documentation: QA-GUYAA-GZ
  - Software Product Services: QA-GUYA*-**

Batch access to IBM IMS databases requires Data Extract, an IBM product, to be resident on the IBM host. The part number is 5668-788-Data Extract, version 2, release 4 for MVS and VM. This software needs to be ordered unless already resident on the IBM host.

DEC ACCESSWORKS Data Store requires the addition of warehousing disks sized to customer needs. Consult the VAX Systems and Options catalog for disk selection.

Ordering Information

DEC ACCESSWORKS includes the following software:

- VMS Operating System
- NAS 200, 300 or 400 for VMS Software, as noted above.

Order Codes

Option	Order Code
DEC ACCESSWORKS 3130, 16 MB memory, 426 MB disk	DJ-DB3CA-AA
DEC ACCESSWORKS 3180, 16 MB memory, 426 MB disk	DJ-DB3BA-AA
DEC ACCESSWORKS 4300, 32 MB memory, 852 MB disk	DJ-DB4AA-AA
DEC ACCESSWORKS 4500, 64 MB memory, 852 MB disk	DJ-DB4BA-AA
DEC ACCESSWORKS 6610 50 Hz, 64 MB memory, 2 GB disk	DJ-DB6AA-AB
DEC ACCESSWORKS 6610 60 Hz, 64 MB memory, 2 GB disk	DJ-DB6AA-AC
DEC ACCESSWORKS 4500HA, 64 MB memory, 852 MB disk	DJ-DB4CA-AA
DEC ACCESSWORKS 6610HA 50 Hz, 128 MB memory, 2 GB disk	DJ-DB6BA-AB
DEC ACCESSWORKS 6610HA 60 Hz, 128 MB memory, 2 GB disk	DJ-DB6BA-AC

DEC ACCESSWORKS Options	
Option	**Order Code**
DEC ACCESSWORKS SNA	
SNA Connect for DEC ACCESSWORKS 3130	DJ-DB3CB-AA
SNA Connect for DEC ACCESSWORKS 3180	DJ-DB3BB-AA
SNA Connect for DEC ACCESSWORKS 4300	DJ-DB4AB-AA
SNA Connect for DEC ACCESSWORKS 4500	DJ-DB4BB-AA
SNA Connect for DEC ACCESSWORKS 6610	DJ-DB6AB-AA
DEC ACCESSWORKS SNA-ST	
SNA-ST Connect for DEC ACCESSWORKS 3100	DJ-DB3CC-AA
SNA-ST Connect for DEC ACCESSWORKS 4300	DJ-DB4AC-AA
SNA-ST Connect for DEC ACCESSWORKS 4500	DJ-DB4BC-AA
SNA-ST Connect for DEC ACCESSWORKS 6610	DJ-DB6AC-AA
DEC ACCESSWORKS SNA-CT	
SNA-CT Connect for DEC ACCESSWORKS 3100	DJ-DB3CD-AA
SNA-CT Connect for DEC ACCESSWORKS 4300	DJ-DB4AD-AA
SNA-CT Connect for DEC ACCESSWORKS 4500	DJ-DB4BD-AA
SNA-CT Connect for DEC ACCESSWORKS 6610	DJ-DB6AD-AA
DEC ACCESSWORKS SNA-BASIC	
SNA-BASIC Connect for DEC ACCESSWORKS 3100	QP-LBYAA-01
SNA-BASIC Connect for DEC ACCESSWORKS 4300	QP-LBYAA-02
SNA-BASIC Connect for DEC ACCESSWORKS 4500	QP-LBYAA-03
SNA-BASIC Connect for DEC ACCESSWORKS 6610	QP-LBYAA-04
ACCESS For ORACLE	
RdbAccess for ORACLE for DEC ACCESSWORKS 3100	QL-YQVA9-JC
RdbAccess for ORACLE for DEC ACCESSWORKS 4300	QL-YQVA9-JB
RdbAccess for ORACLE for DEC ACCESSWORKS 4500	QL-YQVA9-JK
RdbAccess for ORACLE for DEC ACCESSWORKS 6610	QL-YQVA9-JL
DEC ACCESSWORKS Data Store	
Data Store for DEC ACCESSWORKS 3100	QP-LBZAA-01
Data Store for DEC ACCESSWORKS 4300	QP-LBZAA-02
Data Store for DEC ACCESSWORKS 4500	QP-LBZAA-03
Data Store for DEC ACCESSWORKS 6610	QP-LBZAA-04

InfoServer 150/150VXT



The InfoServer 150 is a dedicated network storage server that lets up to 100 clients share software and information from multiple Small Computer Systems Interface (SCSI) devices over an 802.3/Ethernet LAN.

Unlike file servers, the InfoServer 150 serves at the block level, so multiple operating systems can be served simultaneously. Designed to provide the convenient access of a locally attached device, this server delivers an extremely fast response to information requests. InfoServer 150 client software is available today for VMS, ULTRIX, PATHWORKS for DOS, Novell NetWare, and generic DOS environments as well as for Digital's VXT 2000 X Window terminals.

The InfoServer 150 is ideal for any environment in which information is shared — including corporate research centers, universities, health care organizations, and government agencies. It lets PC users take advantage of more than 6,000 CD-ROM applications written in industry-standard ISO 9660 and High Sierra formats. This server provides a single, centralized resource for accessing read-only data and writing files that can be shared across a LAN. Doctors, for example, can use the InfoServer 150 to access hundreds of medical references as well as patients' X-rays scanned into high-capacity storage devices.

This versatile product also offers many system management benefits. VMS system managers can use the server to perform initial software system loads efficiently and cost-effectively. SCSI tape support is available for VMS clients. This support lets system managers perform VMS tape backups with traditional save-set commands.

Cost-effective Packaged Solution

The InfoServer 150 features preconfigured hardware and factory-loaded software for plug-and-play installation and easy management. The base system includes an Ethernet interface for either ThinWire or thick wire connections, an internal 121 MB RZ23L hard disk, and an integral RRD42 CD-ROM drive. InfoServer Software V2.1, is also included. The InfoServer 150 supports up to 14 SCSI devices, including CD-ROM, tape, solid state, hard disk, and magneto-optical drives, providing that ANSI requirements for SCSI bus length are met. The InfoServer 150 license also includes the rights-to-use all InfoServer 150 clients developed by Digital.

Features

- Supports up to 100 concurrent clients (accessing the same server).
- Delivers information stored in multiple formats to MS-DOS, ULTRIX, and VMS users simultaneously.
- Performance enhanced with a caching scheme, 60 ns CPU chip, and sophisticated software.
- Supports up to 14 locally-attached devices, including tape, CD-ROM, solid state, hard disk, and magneto-optical drives.
- Cost-effective — Rights-to-use all InfoServer 150 clients developed by Digital are included with the server license.
- Features factory-loaded software.

InfoServer 150VXT

Specifically configured for use with the VXT 200 X Window terminal, the InfoServer 150VXT extends physical memory by creating a virtual memory environment for each VXT 2000 system. System managers can use the VXT Software to manage VXT 2000 terminal work groups across the network. The InfoServer 150VXT acts as a load device for VXT 2000 Software and also provides storage for high-speed font access. This server can be upgraded to include disk and/or tape access.

Specifications	
Physical Characteristics	
Height	10.33 cm (4.07 in)
Length	46.38 cm (18.26 in)
Depth	39.42 cm (15.52 in)
Weight	11.40 kg (25 lb)
Power Requirements	
Nominal voltage	110 V to 240 V
Power source phasing	Single
Nominal frequency	50 Hz to 60 Hz
Voltage range	88 V to 264 V
Line Frequency tolerance	47 Hz to 63 Hz
Maximum running current	1.5 A to 2.8 A
Maximum power consumption	190 W
Operating Environment	
Temperature	10° C to 32° C (50° F to 90° F)
Relative humidity	10% to 80% (noncondensing maximum)
Operating altitude	2.4 km (8,000 ft)

Ordering Information

InfoServer 150/InfoServer 150VXT Order Codes	
Option	**Order Code**
InfoServer 150 disk server w/RZ23L and one internal RRD42	SEACD-AA
InfoServer 150 disk server w/RZ23L, one internal and one external RRD42	SEACE-AA
InfoServer 150 disk and tape server w/RZ23L and one internal RRD42	SEACT-AA
InfoServer 150 disk and tape server w/RZ23L and one internal and one external RRD42	SEACU-AA
InfoServer 150VXT w/RZ24 disk drive and RRD42 CD-ROM drive. Includes VXT 2000 Software, media licenses, and documentation.	SEACV-AA
InfoServer V1.1 to V2.1 software upgrade license	QL-YSH99-RA
InfoServer V1.1 to V2.1 software upgrade	QL-YSHAA-H8
InfoServer Client for DOS CD-ROM kit	QA-YSHAD-HW
InfoServer Client for ULTRIX RISC media and documentation kit	QA-YSHAB-H*
InfoServer Client for ULTRIX VAX media and documentation kit	QA-YSHAC-H*
Tape function access license upgrade for SEACD-AA, SEACE-AA, and InfoServer 100 systems that have been upgraded to InfoServer V2.1	QL-XZZA9-AA
Media kit for tape function access license upgrade	QA-XZZAA-H*
* Replace * with one of the following: 5 (TK50), M (1600 bpi magtape), 8 (CD-ROM)	

Note: A software license must be purchased for each VXT 2000 terminal.

PrintServer Family

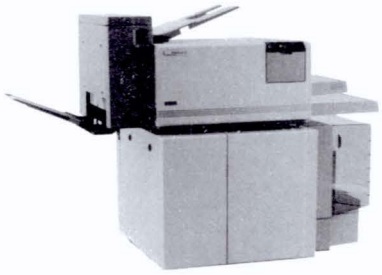

The PrintServer family includes monochromatic, high-speed laser printers that provide a shared printer resource on an 802.3/Ethernet LAN to VMS, MicroVMS, ULTRIX, and Berkeley-based UNIX client systems. DOS systems are supported through DEC PATHWORKS software. Apple Macintosh systems are supported through third-party hardware and software. The PrintServer family supports the DECprint Architecture which defines the printing portion of PATHWORKS, and Digital's Network Application Support (NAS) which enables many types of systems to share printing facilities via DECnet or TCP/IP Ethernet networks.

The PrintServer family consists of two members: the *turbo* PrintServer 20, the entry-level member that prints up to 20 pages per minute (ppm); and the PrintServer 40 *plus*, that prints up to 40 ppm for increased performance.

PrintServers offer high-quality text, graphics, and scanned images through PostScript, the industry-standard page description language from Adobe Systems Inc. PrintServers can print on multiple paper sizes, on overhead transparencies, and specified label stock.

PostScript software takes care of page composition, and PrintServer software handles all of the print management functions. PrintServer software provides the communication between a computer system with a print job and the PrintServer system. The PrintServer system's intelligence resides in the software. New releases of PrintServer software provide additional functions while protecting your hardware investment.

PrintServer software consists of two separate pieces of licensed software: the supporting host portion and the client portion. One system on the network is designated as the supporting host which loads printing services software into the PrintServer controller via the network. The newest release of PrintServer software provides common host services, giving both VMS and UNIX operating systems that support BSD TCP/IP sockets direct access to the PrintServer system. BSD-based operating UNIX systems no longer need to spool print jobs through an ULTRIX node. This promotes a high degree of compatibility across operating systems and network protocols. Any system that sends a print job to the PrintServer system is called a client. The client software is offered on standalone versions for VMS, ULTRIX, or Berkeley-based UNIX operating systems. It is also offered as an integrated function within DECprint Printing Services for VMS.

DECprint Printing Services for VMS is a layered software product that lets you take full advantage of the capabilities of your Digital PostScript printers. Printing Services software notifies you of job completion, error messages, and operator messages such as "out of paper" and "add toner."

PostScript enables the PrintServer to produce highly professional, complex documents with image rotation, rotated type, textures, patterns, halftones, and images scalable to any size and shape. Since many users employ applications that do not support the PostScript language, the software translators that are included with DECprint Printing Services for VMS software can convert ASCII, DEC PPL 3, HP PCL Level 4, ReGIS, and Tektronix 4010/4014 print files into PostScript language output. VMS for VAX clients can access all the translators. Berkeley-based UNIX systems can access the ASCII text translator. When integrated within DECprint Printing Services for VMS, additional translators support Hewlett-Packard's PCL-4.

As an enhancement to DEC PrintServer Supporting Host software and DECprint Printing Services for VMS, Digital offers DEC Image Print-Plus for the *turbo* PrintServer 20. DEC Image Print-Plus software provides a networked solution for printing image data faster. With DEC Image Print-Plus, the *turbo* PrintServer 20 can accept compressed Digital Document Interchange Format (DDIF) image files from anywhere on the network, decompress those files, and print them at print engine speed — up to 20 pages per minute for single-sided print requests. Until now, DDIF image files had to be converted to PostScript on the user's client system and sent uncompressed to the printer. DEC Image Print-Plus takes advantage of the hardware decompression capability of the *turbo* PrintServer 20 so that PostScript conversion is no longer necessary for DDIF images.

DEC Image Print-Plus supports CCITT G3 and G4 compression and employs hardware-assisted image decompression. It can print single- or double-sided copy on multiple paper sizes (including A, A3, A4, legal, and B), and multiple-page image files. DEC Image Print-Plus also supports rotation, cropping, and scaling of images.

▲ For more information on PrintServer Supporting Host software for VMS and ULTRIX systems on a DECnet network, refer to Software Product Description (SPD) 27.68.00; for PrintServer Supporting Host software for ULTRIX and UNIX systems on a TCP/IP network, refer to SPD 30.85.00. ▲ For more information on PrintServer Client Software for VMS systems, refer to SPD 27.67.00 or SPD 32.41.00; for PrintServer Client Software for ULTRIX systems on DECnet or TCP/IP networks, refer to SPD 30.86.00.

PrintServer Family Common Features

- Connects to standard Ethernet networks (thick wire and twisted-pair), supporting both ADVANTAGE-NETWORKS and Internet environments.
- Provides simultaneous support for both DECnet and TCP/IP protocols through PrintServer software; eliminates the need for a dedicated printer for each protocol.
- Supports OPEN DECconnect ThinWire networks with optional ThinWire Ethernet Station Adapter (DESTA).
- In network applications the number of users can range from 20 to 200, with a mean of 60 users.
- High-speed 802.3/Ethernet connection supports distributed processing.
- Support for VMS, ULTRIX, and Berkeley-based UNIX operating systems.
- DOS systems supported through DEC PATHWORKS software.
- Macintosh systems supported through third-party hardware and software. (Mac connection using Cayman Systems, Inc., Gator Box, or Kinetics Fastpath to link Appletalk to Ethernet; software from Alisa Systems, Inc., or Pacer Software installed on VMS network host.)
- Employs the PostScript page description language. (Information on PostScript training is available by contacting Adobe Systems, Inc.)
- Software translators enable printing of ASCII, DEC PPL 3, ReGIS, DDIF, Tektronix 4010/4014, Hewlett-Packard PCL-4, and Apple LaserWriter files.
- Prints at 300 × 300 dots-per-inch (dpi) resolution for text, graphics, and scanned images.
- Accommodates multiple paper sizes, cut sheet paper, transparencies, and predrilled paper.
- "Layup" functions permit multiple images on a single sheet of paper.
- Centralized accounting functions can provide summaries of PrintServer system usage, tracking usage, and cost for each print job.
- Access central software allows system managers to have full control over access to this valuable resource by node name or network address for both DECnet and TCP/IP environments.

turbo PrintServer 20 Features

- Performs user-selectable duplex (double-sided) and simplex (single-sided) printing.
- Provides up to 20 pages-per-minute (ppm) printing.
- Supports recommended print volumes of up to 70,000 pages-per-month.
- Hardware has been designed for customer installability.
- Provides offset stacking for instant separating of your print jobs.
- Provides large capacity (1,000 sheet) input and output tray; two auxiliary (250 sheets each) input trays; two (750 sheets each) selectable output trays.
- Integral control panel indicates printer and print job status.
- Provides more power and performance in processor-intensive print jobs (such as complex graphics and multifont text) than the PrintServer 20.

Another distinguishing factor is the *turbo* PrintServer 20 system's duplex-printing capability. It processes page images using an interleaved technique that enables you to print multiple page, 2-sided documents quickly and efficiently.

The *turbo* PrintServer 20 was designed for easy hardware installation, typically to be completed in less than an hour. (In the United States, hardware installation is performed by the user. Optional installation is available from Digital Services.)

PrintServer 40 plus Features

- High-performance CMOS-based MicroVAX CPU for higher throughput of processor-intensive print jobs.
- Provides up to 40 pages-per-minute printing.
- Supports recommended print volumes of up to 100,000 pages per month.
- Large capacity (2,000 sheet) input tray; two auxiliary input trays (250 sheets each); two selectable output trays (500 sheets each).
- Optimal 3000 sheet output stacker.
- Includes a Digital VT420 video terminal console to monitor system print job status.

The PrintServer 40 *plus* features a high-performance, CMOS-based MicroVAX CPU for higher throughput of processor-intensive print jobs.

The PrintServer 40 *plus* system can handle a wide variety of output ranging from simple memos to documents combining complex graphics and multifont text.

Prerequisite Software for PrintServers

- For VMS systems, VMS V5.3 or higher
- For ULTRIX systems, ULTRIX V4.0 or higher

Prerequisite Hardware for DECprint Printing Services for VMS

- VAX, MicroVAX or VAXstation system and at least one PostScript printer.
- Supported printers from Digital include
  - DEClaser 1150, 2150, 2250, 3250
  - PrintServer 20, *turbo* PrintServer 20
  - PrintServer 40, PrintServer 40 *plus*
  - LN03 ScriptPrinter
  - LN03 ImagePrinter
  - ColorMate PS

Prerequisite Software for DECprint Printing Services for VMS

- VMS operating system V5.3 or higher
- For PrintServer configuration only: DECnet VAX PrintServer Supporting Host Software
- For LN03 ImagePrinter configuration only: LN03 Image Support Software

Prerequisite Hardware for DEC Image Print-Plus

- *turbo* PrintServer 20 (model number LPS20-GA) or PrintServer 20 upgraded to a *turbo* PrintServer 20 (upgrade model number LPS20-UA)
- VAX, MicroVAX, or VAXstation for supporting host
- VAX, MicroVAX, or VAXstation for client services

Prerequisite Software for DEC Image Print-Plus

- VMS operating system V5.3 or higher
- DECnet-VAX
- DECprint Printing Services for VMS, V4.1

Ordering Information

PrintServers are complete printing systems consisting of the physical hardware and the appropriate software licenses (client and supporting host) necessary for network usage. Software licenses are packaged with the hardware. Customers are required to purchase one copy each of the client and supporting host software media on the appropriate medium, an H4005 Ethernet transceiver, DELNI or DESTA, and the proper transceiver or ThinWire cable to attach the PrintServer to the network.

For the PrintServer 40 *plus* H4005/DELNI connection, right-angle cables must be ordered. The last two digits of the order code specify the length of the cable, measured in feet.

PrintServer 40 plus Order Codes

Option	DECnet Order Code	TCP/IP Order Code
U.S. model: PrintServer 40 *plus*, 40 ppm high-performance 802.3/Ethernet-connected PostScript laser printer, 220/240 V, 60 Hz, attached power cord. DECnet Client and Supporting Host licenses are included.	LPS40-DA	LPS40-FA
International model: PrintServer 40 *plus*, 40 ppm high-performance 802.3/Ethernet-connected PostScript laser printer, 200/208/220/230/240 V, 50 Hz. TCP/IP Client and Supporting Host licenses are included. Power cord must be ordered separately.	LPS40-D3	LPS40-F3
Large capacity output stacker.	LPS4X-CA	

turbo PrintServer 20 Order Codes	
Option	**Order Code**
U.S. model: *turbo* PrintServer 20, 20 ppm 802.3/ Ethernet-connected PostScript laser printer, 120 V, 60 Hz, power cord. DECnet and TCP/IP Client and Supporting Host licenses included.	LPS20-GA
International models: Please refer to the *VAXsystems and DECsystems Systems and Options Catalog*, or your local sales representative for model numbers.	

It is necessary to purchase a license for each *turbo* PrintServer 20 that is to be upgraded with DEC Image Print-Plus software. The license permits execution of the software on any processor (such as a VAX computer) or VAXcluster within a local area network. Refer to the following table for DEC Image Print-Plus software and associated media and documentation ordering information.

DEC Image Print-Plus Software Order Codes	
Option	**Order Code**
License	FW-IPPL9-AA
TK50 media and documentation	FW-IPPK0-H5
Magtape media and documentation	FW-IPPK0-HM
Documentation only	FW-IPPK0-GZ
Note: Documentation includes *DEC Image Print-Plus Overview and Users Guide, DEC Image Print-Plus Supporting Host Software for VMS Installation Guide, DEC Image Print-Plus Client Services Software Installation Guide*, and *DEC Image Print-Plus Supporting Host Software for VMS Management Guide.*	

Cable Order Codes	
Option	**Order Code**
IEEE 802.3/Ethernet PVC-jacketed right-angle male-to-female transceiver cable	BNE3K-10, BNE3K-20, BNE3K-40
IEEE 802.3/Ethernet plenum-rated Teflon right-angle male-to-female transceiver cable	BNE3M-10, BNE3M-20, BNE3M-40

Consumable Parts	
PrintServer 40 *plus*	***turbo* PrintServer 20** (page limit is for simplex printing only)
LPS4X-AA toner kit (approximately 60,000 pages)	LPS2X-AA toner kit (approximately 20,000 pages)
LPS4X-AB maintenance kit (approximately 100,000 pages)	LPS2X-AB supplies kit (approximately 20,000 pages)
LPS4X-AC fuser oil kit (approximately 60,000 pages)	LPS2X-AC OPC drum kit (approximately 80,000 pages)
LPS40-UA PrintServer 40 to PrintServer 40 *plus* upgrade kit	LPS2X-AD cleaning unit kit (order this when you order toner kit LPS2X-AA)
H9850-TA laser labels (21/sheet, 100/box)	LPS20-UA PrintServer 20 to *turbo* PrintServer 20 upgrade kit
H9850-TB laser labels (30/sheet, 100/box)	

Software Ordering Information

An optional Digital source kit is available so customers can port PrintServer TCP/IP software for ULTRIX V2.0 to any Berkeley-based UNIX system requiring direct access to PrintServer resources.

▲ Refer to the following for further information on supported processor and services.

- VAX PrintServer Client Software
  - Software Product Description 27.67.00
  - Unique Product Identifier 797
- DECprint Printing Services for VMS V4.1
  - Software Product Description 32.41.00
  - Unique Product Identifier YNC
- VAX PrintServer Supporting Host Software
  - Software Product Description 27.68.00
  - Unique Product Identifier 798
- PrintServer Client Software for ULTRIX
  - Software Product Description 30.87.00
  - Unique Product Identifier VVL
- PrintServer Client Software for ULTRIX
  - Software Product Description 30.86.00
  - Unique Product Identifier VVM
- PrintServer TCP/IP Supporting Host Software for ULTRIX
  - Software Product Description 30.85.00
  - Unique Product Identifier VVZ

▲ For more information, refer to Chapter 9 in the *VAXsystems and DECsystems Systems and Options Catalog*.

Introduction

The move to open systems and open networks has resulted in the need to accommodate multiple protocols and to handle them using internationally accepted standards. Networks have increased in size as remote sites have been incorporated, requiring smaller and more reliable internetworking products. Networks will also become much more complex as traffic volume increases with the use of new high-speed networking technologies such as FDDI, SMDS and T3. This growth in size and complexity requires detailed planning and design consultancy, consistent management, and a modular and expandable approach to product design.

Digital's Family of Multiprotocol Routers, Bridges, and Gateways

From the early phases of DECnet through the development of the industry's first dedicated routing platforms, Digital has been at the forefront of networking technology. Now, Digital is responding to the market requirements for a competitive multiprotocol router family that leads in the implementation of industry standards.

Digital's new family of interoperable multiprotocol routers, bridges, and X.25 gateways is based on an architecture that allows easy growth and expansion. These internetworking products allow customers to build commercial production networks for corporate enterprise backbone networking.

The scalable family ranges from two high-performance platforms for routing, bridging, and gateway services that are multiprotocol, fully modular, and expandable, to entry-level access routers. All products utilize a common software environment based on industry standards that ensure consistent protocol support and network management.

Multiple Protocols Based on International Standards

Digital is committed to developing open products for open networks by conforming to industry standards. Our multiprotocol routing and X.25 implementations are compliant with relevant ISO, IETF, and CCITT standards with OSI and TCP/IP routing based on the new Intermediate System-to-Intermediate System (IS-IS) protocol. Additionally, Digital continues to ensure backwards compatibility even with commitment to new standards; our implementation of IS-IS also handles DECnet Phase IV, thus providing both interoperability and a migration path for the installed base of end systems. Digital has recently participated in development of a Frame Relay specification with StrataCom Inc. and Northern Telecom, another example of our commitment to working with others to develop new industry standards.

Significance of Integrated IS-IS

As part of its continuing commitment to provide and support customers with the most open and flexible networking options, the Integrated Intermediate System-to-Intermediate System (IS-IS) Routing Protocol has been developed in cooperation with the INTERNET Engineering Task Force (IETF) and has been published as RFC 1195.

The Integrated IS-IS proposed protocol provides a common interior gateway protocol (IGP) for TCP/IP, OSI, and DECnet networks, and uses the OSI IS-IS Intradomain routing protocol (ISO/IEC 10589) as that common IGP.

The Integrated IS-IS routing protocol determines the paths taken by TCP/IP, OSI, and DECnet packets through the network simultaneously, and keeps routers in the network informed of the status of the network and the systems available to the network. The use of Integrated IS-IS routing protocols will allow network owners to deploy routers from multiple vendors and build a single, cohesive, dynamic network infrastructure supporting TCP/IP, OSI, and DECnet. The use of a single routing protocol, the Integrated IS-IS, within this networking infrastructure will provide significant benefits in network operations and maintenance, in network diagnostics and troubleshooting, and in bandwidth utilization.

Frame Relay Networks

At the same time as companies have needed multiprotocol routing support, there has also been a rapid increase in the volume of network traffic that needs to be handled between customer sites. This growth has been fueled by the increase of high-speed graphics workstations and the move to a client/server distributed computing model. Existing packet switching services such as X.25 are not suited to this type of LAN interconnection due to their high processing overhead and lower throughput rates. The tariff costs of high-speed transmission services also require that the use of the available bandwidth is maximized and shared between users of both voice and data circuit switching equipment.

Summary of Internetworking Routers, Bridges, and Gateways

Digital has a new interoperable family of flexible, full function local and wide area network multiprotocol routers, bridges, and gateways. They enable Digital and multivendor systems to utilize international standards-based routing protocols and interoperate in a truly open style.

Digital's new internetworking routers support OSI, TCP/IP, DECnet, bridging, and X.25 gateway services that are included in the selected products. Following is a list of the internetworking products available from Digital:

- **DEC X25gateway 100** — Provides both Digital and multivendor systems with connections to X.25 Packet Switched Data Networks (PSDNs) over one synchronous line.
- **DEC WANrouter 250** — A flexible and economical multiprotocol router for synchronous/asynchronous connections that can accommodate up to eight synchronous/asynchronous lines.
- **DEC WANrouter 500** — A cost-effective multiprotocol router for medium traffic sites that can accommodate up to four synchronous lines.
- **DEC X25gateway 500** — Provides both Digital and multivendor systems with connections to X.25 Packet Switched Data Networks (PSDNs) over four synchronous lines.
- **DECNIS 500** — A new generation network server.. The DECNIS 500 is a packaged system for high-performance LAN/WAN integration. This server provides two network interface card slots to support multiprotocol routing and local and remote bridging.
- **DECNIS 600** — A new generation network server for high-performance LAN/WAN integration. Expandable with seven network interface card slots to support multiprotocol routing, local and remote bridging, and X.25 gateway services.

Summary of Multiprotocol Router, Bridges, and Gateways

	Access Routers				Backbone Routers	
Product	**DEC X25gateway 100**	**DEC WANrouter 250**	**DEC WANrouter 500**	**DEC X25gateway 500**	**DECNIS 500**	**DECNIS 600**
Hardware Type	DEMSB	DSRVR	DEMSA	DEMSA	4 slot modular	9 slot modular
Number of Lines	1 at 802.3 1 at 64 K	1 at 802.3 2 at 64 K 8 at 19.2 K	1 at 802.3 2 at 256 K 4 at 64 K	1 at 802.3 2 at 256 K 4 at 64 K	2 at 803.3 or 4 at 2 MB or 16 at 64 K	7 at 803.3 or 14 at 2 MB or 56 at 64 K
Protocols Supported	GAP LLC2 OSI CONS	DECnet TCP/IP OSI CLNS	DECnet TCP/IP OSI CLNS	GAP LLC2 OSI CONS	DECnet TCP/IP OSI CLNS/ CONS Bridging	DECnet TCP/IP OSI CLNS/ CONS Bridging
Data Link Support		DDCMP HDLC X.25	DDCMP HDLC X.25 Frame Relay	X.25	HDLC X.25 802.1d	HDLC X.25 802.1d
Network Management	NCL	NCL SNMP	NCL SNMP	NCL	NCL SNMP	NCL SNMP
Down-line Load Support						
LAN Ports	Yes	Yes	Yes	Yes	Yes	Yes
Sync Ports		Yes			Yes	Yes
Agent Loader					Yes	Yes
Traffic	Light	Medium	Medium	Medium	Heavy	Heavy
Locations	Remote sites or branch offices	District sites that link the branch office and are part of the corporate LAN			Corporate Backbone Network	

Digital's Routing Portfolio – Digital's Multiprotocol Routing Family

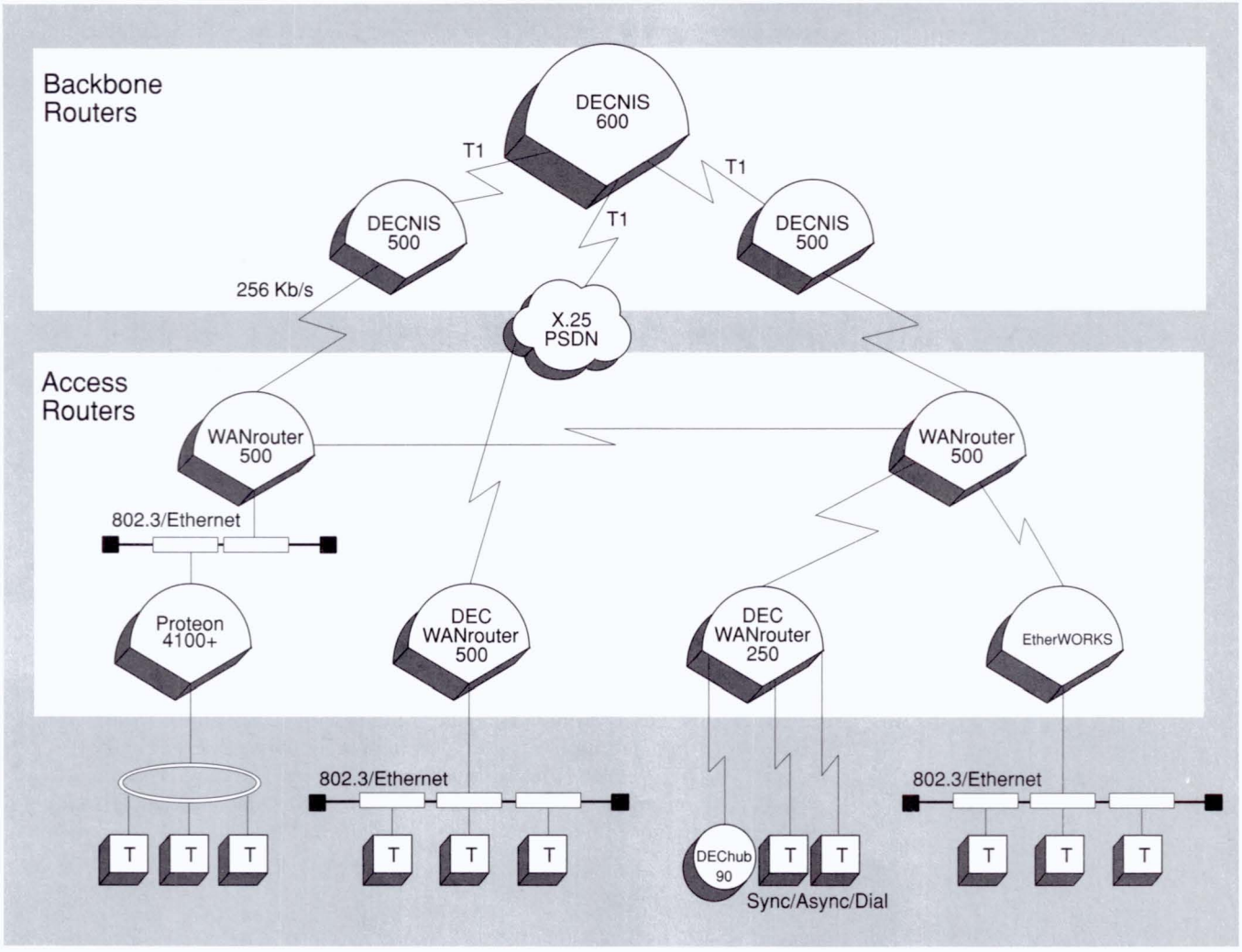

TBG-167–01

Support for Standards

The new family of interoperable routers implements the following standards-based internetworking capabilities in whole or in part. Check the individual Software Product Description (SPD) for specific product details.

OSI Routing

- The OSI Intermediate System-to-Intermediate System (IS-IS) Intradomain Routing Exchange protocol as specified in ISO/IEC Standard 10589.
- OSI-compatible end systems on the same LAN can exchange information with the router using the OSI End System-to-Intermediate System (ES-IS) Routing Exchange protocol as specified in ISO 9542.
- The OSI Connectionless Network Protocol (CNLP) as specified in ISO 8473 to communicate with ISO compatible systems on a LAN.
- Communications over synchronous links using either HDLC or X.25 data link protocols.

Internet Routing

- Support for TCP/IP hosts on the same LAN as the router using ARP.
- IP datagrams can be forwarded to a remote TCP/IP host within the same Internet domain connected by an INTERNET gateway by using RIP and EGP.
- Routing of IP datagrams through the network uses the Integrated IS-IS routing protocol as specified in RFC 1195 to communicate reachability of TCP/IP hosts.

DECnet Routing

- Implements the DECnet Phase IV vector routing and the Integrated IS-IS link-state routing. These products support intra-area routing (Level 1) and inter-area routing (Level 2) for both vector and link-state routing. These products can run either the vector routing (Phase IV) or link-state (Integrated IS-IS) routing algorithm in either combination at each level.
- Communications over synchronous links use either DDCMP, HDLC and X.25, or Frame Relay links.

X.25 Routing Circuits

- Supports use of static and dynamic assignment of X.25 routing circuits. Dynamic assignment occurs only when information needs to be transmitted and is disconnected when completed.
- Routing of TCP/IP, OSI, and DECnet routing over X.25 circuits.

Frame Relay Networks

- Supports connections over Frame Relay data links as specified in the Frame Relay Specification jointly developed by Digital Equipment Corporation, StrataCom Inc., and Northern Telecom.
- Multiple virtual circuits can be multiplexed over a single Frame Relay link using the Data Link Control Identifier (DLCI) field of the Frame Relay header.

Bridging

- Supports both local and remote bridging of any traffic data type that does not need to be routed.
- Implements the IEEE 802.1d Spanning Tree Protocol and will interoperate with other Digital or IEEE 802.1d-compliant bridges in the same extended LAN.

- Bridge traffic, both local and remote, may be filtered based on a combination of destination address and protocol type on a port-by-port basis.

Network Management

The family of interoperable internetworking products can be managed from any VMS or ULTRIX end system using the Network Command Language (NCL) and DECmcc. Management of the INTERNET functions can be performed from any end system supporting Simple Network Management Protocol (SNMP). This can be done through the DECmcc Director ADVANTAGE-NETWORKS Access Module or through the Management Station for ULTRIX (MSU). ▲ For further information on network management, refer to Section 7.

Migration from DECnet Phase IV Routers

A software upgrade to the existing router products is available that supports TCP/IP, OSI, DECnet, and X.25 services.

Router to Multiprotocol Router and X.25 Gateway Software Upgrade Chart

Existing Products	New Products	Migration Number
DECrouter 100	DEC WANrouter 100	QL-GZ9A9-AA
DEC X25router 100	DEC X25gateway 100	QL-GZAA9-AA
DEC X25router 2000	DEC X25gateway 500	QL-GZAA9-AA
DECrouter 2000	DEC WANrouter 500	QL-GZ9A9-AA
DECrouter 250	DEC WANrouter 250	QL-GZXA9-AA

You can use Phase IV and TCP/IP as the main networking protocol as you transition to OSI. The only requirement is that any load host or network management system requiring NCL for the router must be running ADVANTAGE-NETWORKS management software (i.e., DECnet OSI for ULTRIX V5.0 or DECnet VAX Extensions V5.4).

Digital's DECnet Phase IV routers include the following:

- **DEC X25router 100** — Offers DECnet Phase IV Level 1 routing over X.25 packet switching services over a single line.
- **DECrouter 250** — Transfers data packets from DECnet Phase IV nodes on an IEEE 802.3/Ethernet or other IEEE 802.3/Ethernet LANs by way of up to eight low-to-medium speed synchronous/asynchronous lines.
- **DECrouter 2000** — Provides medium- to high-speed connections for remote nodes of IEEE 802.3/Ethernet LANs by way of up to four synchronous lines.
- **DEC X25router 2000** — Combines the functions of the DECrouter 2000 with additional X.25 connections to Packet Switched Data Networks (PSDNs). It can run DECnet and X.25 concurrently.
- **DEC ISDNrouter 100** — Provides DECnet Phase IV routing over the ISDN basic rate access. It supports up to six B-channels at 64 Kb/s.

Summary of DECnet Phase IV Routers					
Product	**DEC X25router 100**	**DECrouter 250**	**DECrouter 2000**	**DEC X25router 2000**	**DEC ISDNrouter 100**
Hardware Type	DEMSB	DSRVR	DEMSA	DEMSA	DISDN
Number of Lines	1 at 802.3 1 at 64	1 at 802.3 2 at 64 8 at 19.2	1 at 802.3 1 at 2 MB 2 at 384 3 at 256 4 at 64	1 at 802.3 3 at 256 4 at 64	6 at 64
Protocols Supported	DECnet	DECnet	DECnet	DECnet	DECnet
Data Link Support	DDCMP X.25	DDCMP	DDCMP	DDCMP X.25	DDCMP
Network Management	NCP	NCP	NCP	NCP	NCP
Down-line Load Host					
LAN Ports	Yes	Yes	Yes	Yes	Yes
Sync Ports		Yes			
Traffic	Light	Medium	Medium	Medium	Medium
Locations	Remote sites or branch offices		District sites that link the branch office and are part of the corporate LAN		

DEC MicroServer-SP (DEMSB)

The DEC MicroServer-SP can provide synchronous communications for light network traffic for connection of an IEEE 802.3/Ethernet LAN over a wide area network (WAN). Typically, it is used for remote sites or branch offices with workstations, general-purpose systems, or PCs.

The DEC MicroServer-SP is a free-standing box that can also be rackmounted in an OPEN DECconnect 19-inch rack, using the kit provided. Connections on the rear of the unit are provided for power, IEEE 802.3/Ethernet, and single synchronous communications and transmit information up to 64 Kb/s.

Two packages are offered:

- DEC X25gateway 100 — Low-end X.25 server for Packet Switched Data Network access only
- DEC X25router 100 — Low-end X.25 server and DECnet Phase IV router

All the server packages use the same hardware but use different software to suit the application. Both packages include all the hardware required to connect to a modem and the appropriate software license. A single part number includes all the hardware and software components for remote connection.

Specifications		
Physical Characteristics	**With Case**	**Without Case**
Height	16.2 cm (6.4 in)	13.3 cm (5.3 in)
Width	49.4 cm (19.4 in)	43.6 cm (17.2 in)
Depth	31.3 cm (12.3 in)	29.8 cm (11.7 in)
Weight	8.1 kg (18 lb)	6.9 kg (13 lb)
Power Requirements		
Nominal	120 Vac, 60 Hz	
Range	87 V to 132 V, 47 Hz to 63 Hz	
Consumption	150 W (max)	
Heat dissipation	500 Btu/hr (max)	

The physical connections are via a 50-way universal connector. The single port conforms to EIA-232-D, RS232-C, V.24, V.28, V.36, V.11, V.10, V.35 using the appropriate adapter cables.

Adapter Cable Requirements

Adapter cables for all routers and gateways are the same.

Adapter Cable Requirements		
Electrical Interface Type	**Router Adapter Cables**	**ISO Pinout**
CCITT V.36/X.27 (V.11/EIA-422/449)	BC19B-02	ISO 4902
CCITT V.10 (EIA-RS232/449)	BC19E-02	ISO 4902
CCITT V.35	BC19F-02	ISO 2593
CCITT V.28/V.24 (EIA-RS232-C/D)	BS23V-02	ISO 2110
For low-speed connections, a DB25-pin connector can also be used.		

DEC X25gateway 100

Running on the DEMSB platform, the DEC X25gateway 100 supports one synchronous line at speeds up to 64 Kb/s. The system supports up to 128 concurrent X.29 terminal-to-host applications. The DEC X25gateway 100 provides open networking solutions for small work groups and remote branches. It is also ideally suited for central sites requiring up to 128 X.29 terminal connections.

The DEC X25gateway 100 software operates either as an X.25 Connector system or as an X.25 Relay system.

- **X.25 Connector system** — The DEC X25gateway 100 connects any suitably configured Digital X.25 client system in the ADVANTAGE-NETWORKS to X.25 Packet Switched Data Networks (PSDNs).
- **X.25 Relay system** — The DEC X25gateway 100 allows Digital X.25 client systems to communicate with multivendor X.25 systems on the same LAN. It also allows multivendor X.25 systems on the LAN to access PSDNs using the LLC2 protocol.

Features

- Is fully X.25 compatible and complements the family of routers.
- Supports remote network management, a component of DECmcc and Network Control Language (NCL). These products are fully integrated into the Digital Enterprise Management Architecture (EMA).
- Supports direct access to Digital and multivendor end systems based on the ISO 8348 Connection-mode Network Service (CONS).
- Supports dynamic assignment of up to 128 circuits.
- Supports all major PSDNs.
- Supports both Switched Virtual Circuits (SVCs) and Permanent Virtual Circuits (PVCs).
- Provides full security for inbound and outbound calls.
- Provides CONS support for ADVANTAGE-NETWORKS end systems.
- Provides CONS support for multivendor LLC2 end systems.
- Downline loadable from VAX VMS, VAX ULTRIX, and RISC ULTRIX host systems over IEEE 802.3/Ethernet.

- Available in a tabletop unit that can also be rack- or wall-mounted.
- Full modem control is provided.
- Supports a single synchronous line of up to 64 Kb/s.

Prerequisite Hardware

- VAX, MicroVAX, DECstation or VAXstation systems configured as specified in the System Software Addendum 32.97.00-A
- DEC X25gateway 100 (DEMSB-H) system as specified in the System Software Addendum 32.97.00-A

Prerequisite Software

- Either VMS operating system V5.4 software with DECnet VAX extensions V5.4 software, or ULTRIX operating system V4.2 running DECnet OSI for ULTRIX V5.0 software.

Ordering Information

DEC X25gateway 100 Hardware Order Codes

Option	Order Code
DEC MicroServer-SP basic hardware (120/240 V), Thin-Wire Ethernet adapter, 2 m (7 ft) standard Ethernet cable, one EIA-RS232-C/D cable, rackmounting kit, DEC X25gateway 100/500 software license, and hardware documentation	DEMSB-H*

* Replace the * with one of the following codes: A (United States, Mexico, Canada, Japan), D (Denmark), E (United Kingdom, Ireland), G (Germany), I (Italy), K (Switzerland), T (Israel), X (Austria, Belgium, Finland, France, Netherlands, Norway, Sweden, Portugal, Spain), Z (Australia, New Zealand)

▲ For additional adapter cables, refer to the "*Adapter Cable Requirements*" table in the DEC MicroServer-SP product description.

DEC X25gateway 100/500 Software Order Codes

Option	Order Code
Software Media Kits	
VMS software	QA-YT8AA-H*
VAX ULTRIX software	QA-YT8AB-H*
RISC ULTRIX software	QA-YT8AC-H*
Migration License for DEC X25router 100	QL-GZAA9-AA

*5 = TK50, M = magtape

▲ Refer to the following for further information on supported processors and services:

- Software Product Description 32.97.00
- System Support Addendum 32.97.00-A

DEC X25router 100

The DEC X25router 100 offers DECnet Phase IV routing over X.25 packet switching services. These services can offer significant line cost savings in some applications, particularly for low-volume intercontinental traffic. The use of routing over X.25 is transparent to the DECnet PC or the workstation user.

The DEC X25router 100 can be used to connect any suitably configured Digital X.25 Client system in the DECnet network to an X.25 Packet Switched Data Network (PSDN). For example, a VMS workstation running VAX P.S.I. Access software can connect to a remote system using X.29, and in conjunction with ALL-IN-1 and VAX Message Router X.400, can communicate with other public and private X.400 MAIL networks.

To use any of the host-to-host or terminal-to-host capabilities of an X.25 link from the DEC X25router 100, suitable X.25 Client software must be installed on DECnet nodes requiring X.25 access. This software is not necessary when using DDCMP routing or X.25 DLM circuits. ▲ For further information, refer to Section 5, "Packetnet Communications Software."

Features

- Supports line speeds up to 19.2 Kb/s.
- Support for DECnet over X.25 (DLM) circuits.
- Support for systems running suitable X.25 client software.
- Requires a VMS or ULTRIX system or workstation to load and manage the server.

Prerequisite Software

Each VMS system acting as a load host or dump receiver will need

- VMS operating system V4.4 to V5.4
- DECnet VAX V4.4 to V5.4 (either end-node or full-function)

Ordering Information

DEC X25router 100 Hardware Order Codes

Option	Order Code
DEC X25router 100 Server package includes DEC MicroServer-SP hardware (120/240 V), TK50 software media for VMS, one EIA-RS232-C/D adapter cable, power cord, and DEC X25router 100 license with warranty	DEMSB-X*
DEC X25router Server package for Ireland includes the components listed above	DEMSB-YE

* Replace the * with one of the following codes: A (United States, Mexico), C (Canada), J (Japan), D (Denmark), E (United Kingdom), G (Germany), I (Italy), K (Switzerland), T (Israel), X (Austria, Belgium, Finland, France, Netherlands, Norway, Sweden, Portugal, Spain), Z (Australia, New Zealand)

DEC X25router 100/2000 Software Order Codes	
Option	**Order Code**
Software Media Kits	
VAX ULTRIX and RISC ULTRIX software	QA-VIAAB-H*
VAX VMS software	QA-VIAAA-A*
*5 = TK50, M = magtape	

▲ Refer to the following for further information on supported processors and services:

- Software Product Description 28.86.00

DECrouter 250 (DSRVR) Hardware



The DECrouter 250 hardware provides synchronous/asynchronous communications where moderate network traffic and high fan in are required. Typically, these sites are work groups with workstations, client/server systems, general-purpose systems, or PCs.

The DECrouter 250 hardware supports up to eight synchronous/asynchronous communication lines with a single IEEE 802.3/Ethernet LAN connection. Two lines can be supported at 64 Kb/s or eight lines at 19.2 Kb/s; or one line at 64 Kb/s and four lines at 9.6 Kb/s.

Two packages are offered:

- DEC WANrouter 250 — Multiprotocol router (TCP/IP, OSI, and DECnet)
- DECrouter 250 — DECnet Phase IV router

The physical connections are via 25-pin D-type connectors for the six low-speed ports and via 50-way universal connectors for the two high-speed ports. The six low-speed ports conform to EIA-232-D, V.24, V.28. The two high-speed ports support EIA-232-D, RS232-C, CCITT V.24/V.28, V.36/V.11, V.10, V.35 via an adapter cable.

DEC WANrouter 250 (Multiprotocol Router)

The DEC WANrouter 250 provides a network routing service for

- ADVANTAGE-NETWORKS nodes
- DECnet Phase IV nodes
- TCP/IP hosts
- OSI compatible end systems

These nodes can be collocated on the same LAN as the router or connected to the synchronous/asynchronous ports of the router. Connections to other routers or end systems can be made

- Locally over the LAN using IEEE 802.3/Ethernet.
- Remotely using modem connections over leased and telephone lines using either DDCMP or HDLC data link protocols.

Features

The DEC WANrouter 250 is a fully compatible member of an international standards-based multiprotocol router family.

- Accepts downline loadable DEC WANrouter 250 software from VAX VMS, VAX ULTRIX, and RISC ULTRIX host systems over IEEE 802.3/Ethernet, or remotely over a synchronous line from host systems or via a DECNIS 500/600.
- Uses local dedicated wiring or remote leased lines using DDCMP and HDLC.
- Supports both synchronous and asynchronous ports.
- Provides switch-selectable ThinWire or thick wire IEEE 802.3/Ethernet connection.

The DEC WANrouter 250 software fully implements Integrated IS–IS to provide:

- OSI routing
- Internet routing
- DECnet routing

DEC WANrouter 250 Sample Topology

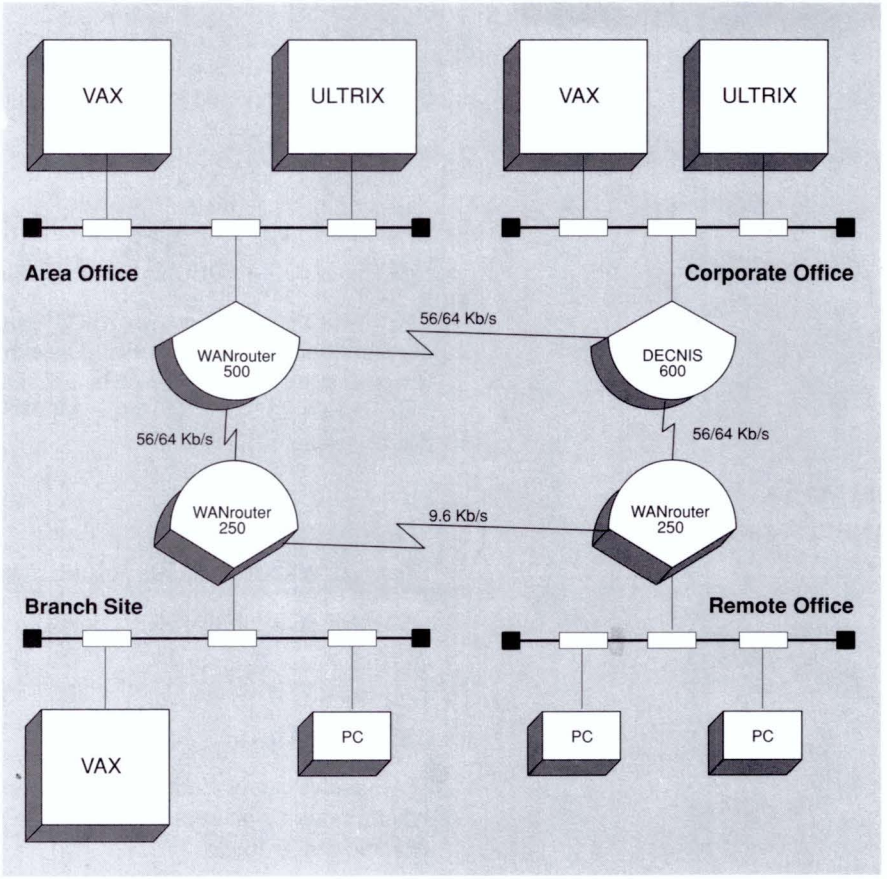

TBG-165-02

Prerequisite Hardware

- VAX, MicroVAX, DECstation, or VAXstation systems configured as specified in the System Software Addendum 36.24.00-A
- DECrouter 250 (DSRVR) as specified in the System Software Addendum 36.24.00-A

Prerequisite Software

- Either VMS operating system V5.4 software with DECnet VAX extensions V5.4 software, or ULTRIX operating system V4.2 running DECnet OSI for ULTRIX V5.0 software.

Ordering Information

You can obtain the DEC WANrouter 250 by ordering it directly or by upgrading a DECrouter 250.

DEC WANrouter 250 Hardware Order Codes

Option	Order Code
DECrouter 250 basic hardware, DEC WANrouter 250 software license, rackmounting kit, (2) EIA-RS232-C/D adapter cables, power cable, and hardware documentation. Media kits should be ordered separately.	DSRVR-W*

* Replace the * with one of the following codes: A (United States, Canada, Japan, Mexico), T (Israel), D (Denmark), E (United Kingdom, Ireland), I (Italy), K (Switzerland), X (Austria, Belgium, Finland, France, Germany, Netherlands, Portugal, Sweden), Z (Australia, New Zealand)

▲ For additional adapter cables, refer to the "*Adapter Cable Requirements*" table in the DEC MicroServer-SP product description.

DEC WANrouter 250 Software Order Codes

Option	Order Code
Media and Software Documentation	
VMS software media	QA-GZZAA-H*
VAX ULTRIX software media	QA-GZZAB-H*
RISC ULTRIX software media	QA-GZZAC-H*
Migration License for DECrouter 250	QA–GZ9A9-AA

*5 = TK50, M = magtape

▲ Refer to the following for further information:

- Software Product Description 36.24.00
- System Support Addendum 36.24.00-A

DECrouter 250 (Phase IV Router)

The DECrouter 250 provides a network routing service for

- Phase III or Phase IV DECnet nodes.

  These nodes can be collocated on the same LAN as the router or connected to synchronous/asynchronous ports of the router. Connections to other routers or end systems can be made

- Locally over the LAN using IEEE 802.3/Ethernet.
- Remotely using modem connections over leased and telephone lines using the DDCMP data link protocol.

Prerequisite Hardware

- VAX, MicroVAX, VAXstation, VAXserver, DECstation, DECsystem, or PC load host.

Prerequisite Software

- Either VMS operating system software with DECnet VAX software, or the ULTRIX operating system running DECnet ULTRIX software or MS-DOS running PATHWORKS for DOS.
- DECrouter 250 software kit for loading and installation under VMS, VAX ULTRIX, RISC ULTRIX, or MS-DOS load host systems.

Ordering Information

DECrouter 250 Hardware Order Code

Option	Order Code
DECrouter 250 basic hardware (120/240 V), DECrouter 250 software license, 2 m (7 ft) standard Ethernet cable, rack-mounting kit, (2) EIA-RS232-C/D adapter cables, and hardware documentation. Media kits should be ordered separately.	DSRVR-D*

* Replace the * with one of the following codes: A (United States, Canada, Japan, Mexico), E (United Kingdom, Ireland), I (Italy), T (Israel), D (Denmark), X (Austria, Belgium, Finland, France, Germany, Netherlands, Portugal, Sweden), Z (Australia, New Zealand)

▲ For additional adapter cables, refer to the "*Adapter Cable Requirements*" table in the DEC MicroServer-SP product description.

DECrouter 250 Software Order Codes

Option	Order Code
Media and Software Documentation	
VMS software media	QA-YG6AA-H*
VAX ULTRIX software media	QA-YG6AB-H*
MS-DOS software media	QA-YG6AC-H*
RISC ULTRIX software media	QA-YG6AD-H*

*5 = TK50, M = magtape, B = RX24, I = RX31

▲ Refer to the following for further information on supported processors and services:

- Software Product Description 32.15.02
- System Support Addendum 32.15.02-A

DEC MicroServer (DEMSA)



The DEC MicroServer can provide synchronous communications for medium-to-heavy network traffic for connection from an IEEE 802.3/ Ethernet LAN over a wide area network (WAN). Typically, sites are large work groups with workstations, client/server systems, general-purpose systems, or PCs.

The DEC MicroServer supports one IEEE 802.3/Ethernet and up to four synchronous communications lines, each supporting up to 64 Kb/s. Only a single line can be configured for T1/E1 (1.5/2.0 Mb/s).

Three packages are offered:

- DEC WANrouter 500 — Multiprotocol router (TCP/IP, OSI, and DECnet) or optionally with Frame Relay software
- DEC X25gateway 500 — Midrange X.25 Server for Packet Switched Data Network access only
- DEC X25router 2000 — X.25 server and DECnet Phase IV router

The physical connections are via four 50-way universal connectors for high-speed ports. The four high-speed port supports EIA-232-D, RS232-C, CCITT V.24/V.28, V.36/V.11, V.10, V.35.

DEC WANrouter 500 (Multiprotocol Router)

The DEC WANrouter 500 provides a network routing service for

- ADVANTAGE-NETWORKS nodes
- DECnet Phase IV nodes
- TCP/IP hosts
- OSI compatible end systems

These nodes can be collocated on the same LAN as the router or connected to the synchronous ports of the router. Connections to other routers or end systems can be made

- Locally over the LAN using IEEE 802.3/Ethernet.
- Remotely using modem connections over leased lines using either DDCMP or HDLC data link protocols.
- Remotely across a Frame Relay network.
- Remotely across a PSDN using X.25 protocols.

Features

The DEC WANrouter 500 is a fully compatible member of an international standards-based multiprotocol router family.

- Accepts downline loadable DEC WANrouter 100/500 software from the VMS for VAX, VAX, ULTRIX, and RISC ULTRIX host systems over IEEE 802.3/Ethernet.

- Uses local dedicated wiring or remote leased lines using DDCMP and HDLC, X.25 PSDNs, or Frame Relay networks.
- X.25 support is DLM/DA or data link mapping/dynamic assignment. This permits OSI, TCP/IP, or DECnet routing over X.25 networks.

The DEC WANrouter 100/500 software fully implements Integrated IS–IS to provide:

- OSI routing
- Internet routing
- DECnet routing

DEC WANrouter 500 Sample Topology

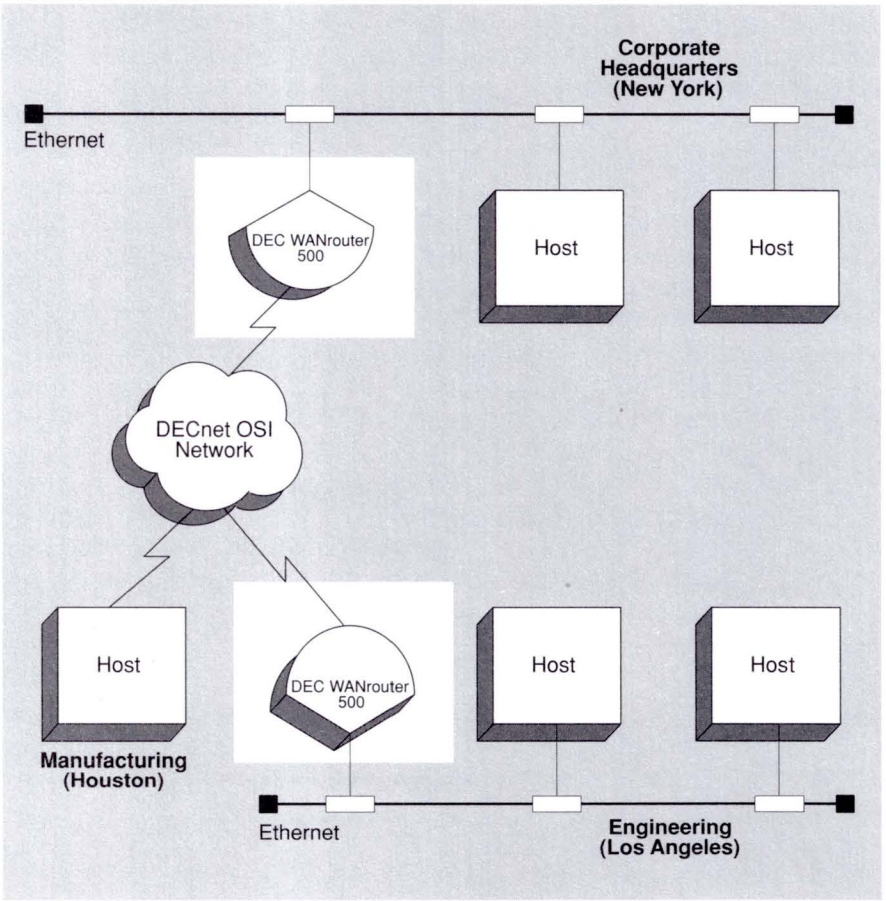

TBG-049-01

Prerequisite Hardware

- VAX, MicroVAX, DECstation, DECserver or DECstation systems as specified in SSA 32-98-00-A.

Prerequisite Software

- Either VMS operating system software with DECnet VAX network software, or the ULTRIX operating system running DECnet OSI for ULTRIX networking software.

- The DEC WANrouter 100/500 software is provided for installation on any VMS, VAX ULTRIX, or RISC ULTRIX host with the appropriate version of the operating system and DECnet software. Separate kits must be ordered and installed for use with Frame Relay networks.

Ordering Information

DEC WANrouter 500 Hardware Order Code

Option	Order Code
DEC MicroServer with DEC WANrouter 100/500 software includes basic hardware (120/240 V), rackmounting kit, (2) EIA-RS232-C/D and (2) V.35 adapter cables, software license, and hardware documentation Germany has (2) X.21 adapter cables and (2) EIA-RS232-C/D adapter cables	DEMSA-W*

* Replace the * with one of the following codes: A (United States, Canada, Japan, Mexico), D (Denmark), E (United Kingdom, Ireland), G (Germany), I (Italy), K (Switzerland), T (Israel), X (Austria, Belgium, Finland, France, Netherlands, Norway, Sweden, Portugal, Spain), Z (Australia, New Zealand)

▲ For additional adapter cables, refer to the "*Adapter Cable Requirements*" table in the DEC MicroServer-SP product description.

DEC WANrouter 100/500 Software Order Codes

Option	Order Code
Software Media Kits for Leased Line and X.25 Data Links	
VMS software	QA-YT7AA-H*
VAX ULTRIX software	QA-YT7AB-H*
RISC ULTRIX software	QA-YT7AC-H*
Software Media Kits for Frame Relay Data Links	
VMS software	QA-YT7AD-H*
VAX ULTRIX software	QA-YT7AE-H*
RISC ULTRIX software	QA-YT7AF-H*
Migration License for DECrouter 2000	QL-GZ9A9-AA

*5 = TK50, M = magtape

Separate media kits are needed for VMS, ULTRIX, and RISC ULTRIX load hosts. A separate set of media kits is required for the software to operate over Frame Relay data links.

▲ Refer to the following for further information on supported processors and services:

- Software Product Description 32.98.00
- Software Support Addendum 32.98.00-A

DEC X25gateway 500

The DEC X25gateway 500 is a combined hardware/software product operating on the DEC MicroServer (DEMSA) hardware platform.

It provides both Digital and multivendor X.25 systems with connections to X.25 Packet Switched Data Networks (PSDNs) and provides X.25 relay and switching capabilities locally for both Digital and multivendor X.25 systems.

Running on the DEMSA hardware platform, the DEC X25gateway 500 supports four synchronous lines at speeds up to 64 Kb/s, or two lines at speeds up to 256 Kb/s. The system supports up to 128 concurrent X.29 terminal-to-host applications and is capable of maintaining up to 256 X.29 terminal-to-host applications. The DEC X25gateway 500 can also relay X.25 packets between synchronous lines.

It also provides an ideal solution for central sites where multiple lines and data transfer using large packet sizes are required.

The DEC X25gateway 500 software operates either as an X.25 Connector system or as an X.25 Relay system.

- **X.25 Connector system** — The DEC X25gateway 500 connects any suitably configured Digital X.25 client system in the ADVANTAGE-NETWORKS to X.25 Packet Switched Data Networks (PSDNs).
- **X.25 Relay system** — The DEC X25gateway 500 allows Digital X.25 client systems to communicate with multivendor X.25 systems on the same LAN. It also allows multivendor X.25 systems on the LAN to access PSDNs using the LLC2 protocol.

  DEC X25gateway 500 software also provides local switching facilities to allow DTEs connected directly to a DEC X25gateway 500 to communicate as though they were linked across a PSDN.

Features

- Is fully X.25 compatible and complements the family of routers.
- Supports remote network management, a component of DECmcc and Network Control Language (NCL). These products are fully integrated into the Digital Enterprise Management Architecture (EMA).
- Supports direct access to Digital and multivendor end systems based on the ISO 8348 Connection-mode Network Service (CONS).
- Supports all major PSDNs, allowing up to four lines to a different PSDN.
- Supports both Switched Virtual Circuits (SVCs) and Permanent Virtual Circuits (PVCs).
- Provides full security for inbound and outbound calls.
- Provides CONS support for ADVANTAGE-NETWORKS end systems.
- Provides CONS support for multivendor LLC2 end systems.
- Accepts downline loadable DEC X25gateway software from VMS for VAX, VAX ULTRIX, and RISC ULTRIX host systems over IEEE 802.3/Ethernet.

- Available in a table top unit that can be also rack or wall mounted, offering a LAN connection for Ethernet and a single port (DEC X25gateway 500) for X.25 connections.
- Provides full modem control.
- Offers up to four lines at 64 Kb/s or up to two lines at 256 Kb/s.

DEC X25gateway 500 Configuration (Digital-to-Multivendor Host)

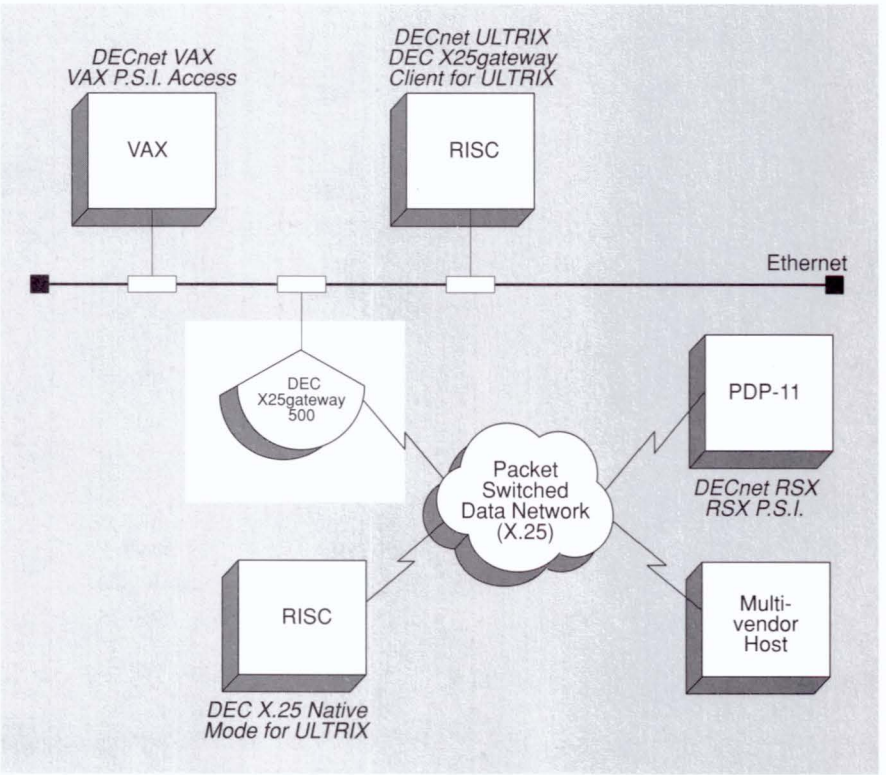

TBG-051-01

X.25/X.29 Terminal Access Configuration

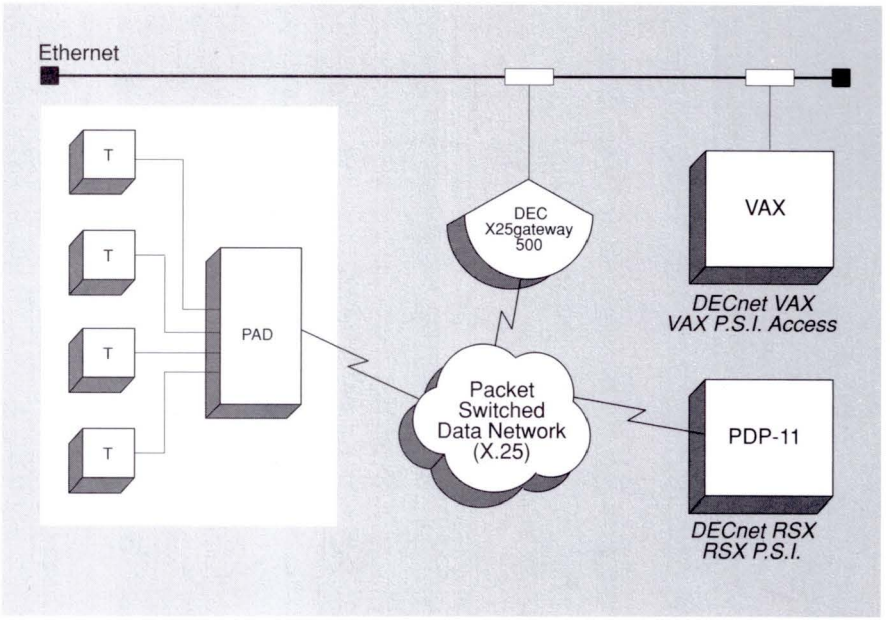

TBG-052-01

Prerequisite Hardware

- VAX, MicroVAX, DECstation or VAXstation host configured as specified in the System Software Addendum 32.97.00-A.
- DEC X25gateway 500 (DEMSA-H) as specified in the System Software Addendum 32.97.00-A.

Prerequisite Software

- For each VAX and DECsystem acting as a load host or dump receiver: either VMS operating system software with DECnet VAX network software (end-node or full-function), or ULTRIX operating system software running DECnet ULTRIX networking software.

Ordering Information

DEC X25gateway 500 Hardware Order Code

Option	Order Code
DEC MicroServer with DEC X25gateway 500 software includes basic hardware, rackmounting kit, (2) EIA-RS232-C/D and (2) V.35 adapter cables, software license, and hardware documentation	DEMSA-H*

* Replace the * with one of the following codes: A (United States, Canada, Japan, Mexico), D (Denmark), E (United Kingdom, Ireland), G (Germany), I (Italy), K (Switzerland), T (Israel), X (Austria, Belgium, Finland, France, Netherlands, Norway, Sweden, Portugal, Spain), Z (Australia, New Zealand)

▲ For additional adapter cables, refer to the "*Adapter Cable Requirements*" table in the DEC MicroServer-SP product description.

DEC X25gateway 100/500 Software Order Codes	
Option	**Order Code**
Software Media Kits	
VMS software	QA-YT8AA-H*
VAX ULTRIX software	QA-YT8AB-H*
RISC ULTRIX software	QA-YT8AC-H*
Migration License	QL-GZAA9-AA
*5 = TK50, M = magtape	

▲ Refer to the following for further information on supported processors and services:

- Software Product Description 32.97.00
- System Support Addendum 32.97.00-A

DEC X25router 2000

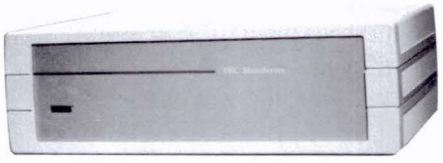

The DEC X25router 2000, a combination hardware/software product that runs on the DEC MicroServer (DEMSA) dedicated hardware unit, acts as an X.25 gateway for an 802.3/Ethernet local area network. This product connects any suitably configured Digital X.25 client system in the DECnet network to one or more PSDNs. It also provides access to a PSDN for any DECnet system in the LAN that wants to communicate with a remote DECnet system by carrying DECnet traffic over the PSDN, as well as providing one end of a point-to-point connection using standard (ISO) protocols, which conform to both International Telegraphy and Telephony Consultative Committee (CCITT) Recommendations and ISO standards.

As with the DECrouter 2000, the DEC X25router 2000 supports both Level 1 and Level 2 inter/intra-area routing. Adapter cables provide the necessary interchange circuits for each synchronous line. Performance is approximately 170 pps for DECnet circuits over X.25 and 150 pps for native X.25.

The DEC X25router 2000 supports four synchronous lines as follows:

- four lines at up to 64 Kb/s
- three lines at up to 256 Kb/s
- two lines at up to 384 Kb/s

▲ Refer to Software Product Description 28.86.00 for further information.

DEC MicroServer (DEMSA)

The DEC MicroServer provides the hardware base for the DEC X25router 2000, for interconnection whenever communication is required from an Ethernet LAN into a WAN. ▲ For further information on the DEC MicroServer, refer to its product description in this section.

Features

- Connects systems on the LAN to X.25 PSDNs.
- Can run both DECnet and X.25 protocols concurrently.
- Allows DECnet to be connected to up to four X.25 PSDNs simultaneously.

Prerequisite Hardware

Any VAX or MicroVAX system, as specified in the DEC X25router Software Product Description 28.86.00.

Prerequisite Software

For each VMS system acting as a load host or dump receiver:

- VMS operating system V4.4 to V5.4
- DECnet VAX V4.4 to V5.4 (either end-node or full-function)

For each ULTRIX system acting as a load host or dump receiver:

- ULTRIX operating system V3.0 to V4.2
- DECnet-ULTRIX V3.0 to V4.1 (either end-node or full-function)

Ordering Information

To use any of the host-to-host or terminal-to-host capabilities of an X.25 link from the DEC X25router 2000, suitable X.25 Client software must be installed on DECnet nodes requiring X.25 access. This software is not necessary when using DDCMP routing or X.25 DLM circuits. ▲ Refer to "Packetnet Communications Software" for more information.

DEC X25router 2000 Hardware Order Codes

Option	Order Code
DEC X25router 2000 Server package, includes DEC MicroServer hardware (120 V), (2) EIA-RS232-D/C and (2) V.35 adapter cables, power cord, and DEC X25router 2000 license with warranty	DEMSA-X*
DEC X25router 2000 Server package for Ireland includes the components listed above	DEMSA-YE

* Replace the * with one of the following codes: A (United States, Canada, Mexico), D (Denmark), E (United Kingdom), G (Germany), I (Italy), J (Japan), K (Switzerland), T (Israel), X (Austria, Belgium, Finland, France, Netherlands, Norway, Sweden, Portugal, Spain), Z (Australia, New Zealand)

▲ For additional adapter cables, refer to the "*Adapter Cable Requirements*" table in the DEC MicroServer-SP product description.

DEC X25router 100/2000 Software Order Codes	
Option	**Order Code**
Software Media Kits	
VMS software	QA-VIAAA-H*
VAX ULTRIX software	QA-VIAAB-H*
RISC ULTRIX software	QA-VIAAB-H*
Migration license for DEC X25gateway 500	QL-GZAA9-AA
*5 = TK50, M = magtape	

▲ Refer to the following for further information on supported processors and services.

- Software Product Description 28.86.01
- System Support Addendum 28.86.01

DECNIS 600

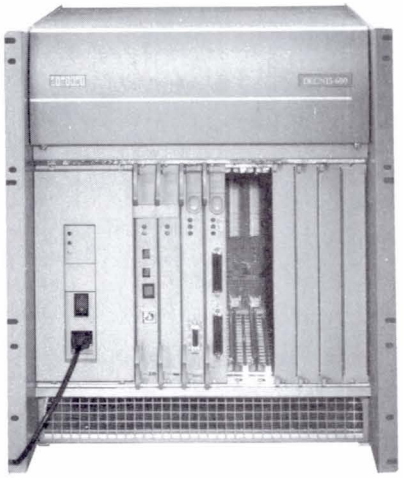

The DEC Network Integration Server 600 (DECNIS 600) integrates local and wide area networks. It acts as a high-speed multiprotocol router, remote and local bridge, and X.25 gateway server that fans in traffic from remote sites to high bandwidth backbone networks.

Its modular design allows the customer to "mix-and-match" network interfaces. Up to seven module slots are available for multiple LAN and WAN network interface cards. As new network technologies are required, new network interface cards can be purchased.

The DECNIS 600 is expandable, allowing new network interface cards to be added as required. Live insertion allows these interfaces to be added without powering down the unit, ensuring no disruption of service to network users.

The server's hardware design is based on a distributed processing architecture, with packet forwarding performed on the network interface modules. This means that the overall packet throughput increases as network interfaces are added.

Preconfigured Systems

Preconfigured systems include management processor and memory cards, and two network interface cards. Additional network interface cards may be ordered separately.

- DECNIS 600–EP — This is the standard base package for high-speed routing and bridging. The DECNIS 600–EP preconfigured system includes a DEC LANcontroller 601, a DEC WANcontroller 622, and routing and bridging software licenses.
- DECNIS 600–RP — This is the standard base package for low-speed routing. The DECNIS 600–RP preconfigured system includes a DEC LANcontroller 601, a DEC WANcontroller 618, and a routing software license.

Network Interface Cards

- DEC WANcontroller 618 — Supports eight synchronous lines for routing at speeds from 1.2 Kb/s up to 64 Kb/s. Separate distribution panels are provided for connection to EIA-RS232, V.35, and RS422, V.11 services. Remote bridging is not supported on this card.
- DEC WANcontroller 622 — Supports two synchronous lines for remote bridging and routing at speeds from 56/64 Kb/s up to 2.048 Mb/s. Separate physical interface adapter cables are required to connect the two universal 50-way connectors to the required physical interface connector.
- DEC LANcontroller 601 — A single-port IEEE 802.3/Ethernet interface card supporting routing and local bridging.

DECNIS 600 Specifications

Physical Characteristics	
Height	55.4 cm (21.82 in)
Width	48.2 cm (19 in)
Depth	47.2 cm (18.61 in)
Weight	
Base unit*	33 kg (72 lb)
Network Interface Cards	1 kg (2.2 lb)
Fully loaded unit	40 kg (88 lb) maximum

* Base unit includes: enclosure, power supply, fan tray, processor, and memory modules

Power Requirements	
Nominal	100 V_{rms} to 120 V_{rms} (120 V) 200 V_{rms} to 240 V_{rms} (240 V)
Range	50 Hz to 60 Hz
Consumption	600 W (max)

Routing Services

The DECNIS 600 provides a network routing service for:

- ADVANTAGE-NETWORKS nodes
- DECnet Phase IV nodes
- TCP/IP hosts
- OSI-compatible end systems

Bridging Services

The DECNIS 600 provides a bridging service for:

- Any LAN traffic that cannot be routed, such as LAT or other protocols
- Nodes attached to IEEE 802.3/Ethernet LANs connected to different DEC LANcontroller 601 interfaces on the DECNIS 600
- Nodes accessible through any IEEE 802.ID-compliant bridge connected on the same LAN as the DECNIS 600 and participating in the same spanning tree topology (for example the LANbridge 150 or LANbridge 200).

- Nodes locally accessible to another DECNIS 600 unit which is connected remotely to the DECNIS 600 using the DEC WANcontroller 622 network interface card.

When providing a remote bridging service, the following restrictions apply:

- Remote bridging is not supported at speeds less than 56 Kb/s
- Remote bridging is not supported on the DEC WANcontroller 618 network interface card
- It is not recommended that multiple remote bridging hops be configured between DECNIS 600 units. (The remote bridging path should not pass through more than one consecutive synchronous link.)

X.25 Services

The DECNIS 600 provides X.25 Gateway services that relay X.25 Level 3 packets to and from

- Digital and multivendor systems on the LAN
- X.25 Data Terminal Equipment (DTE) connected over an X.25 Packet Switched Data Network (PSDN)
- X.25 Data Terminal Equipment (DTE) connected directly to the unit
- Any of the above connected to another Digital X.25 Gateway service accessible over a routing network

These end systems can be collocated on the same LAN as the router or connected to the synchronous ports of the router. Connections to other routers or end systems can be made

- Locally over the LAN using IEEE 802.3/Ethernet
- Remotely using modem connections over leased lines using the HDLC data link protocol
- Remotely across a PSDN using X.25 protocols

Features

- The DECNIS 600 software fully implements the relevant standards for the following:
  - DECnet Routing
  - OSI Routing
  - TCP/IP Routing
  - IEEE 802.D Bridging
- Accepts downline-loadable DECNIS 600 software from the VMS for VAX, VAX ULTRIX, or RISC ULTRIX host systems over IEEE 802.3/Ethernet and synchronous links.
- Uses local dedicated wiring or remote leased lines using HDLC and X.25 PSDN networks.

▲ Refer to the following for details on all standards implemented:

- Software Product Description 36.05.00

Prerequisite Hardware

- VAX, MicroVAX, VAXstation, VAXserver, DECstation or DECsystem computer for software installation and load host.

Prerequisite Software

- VMS load host:
  - VMS operating system V5.4
  - DECnet VAX V5.4 including extensions kit
- ULTRIX load host:
  - VAX ULTRIX or RISC ULTRIX operating system V4.2
  - DECnet OSI for ULTRIX V5.0

Ordering Information

DECNIS 600 Base Hardware System Order Codes	
Option	**Order Code**
The DECNIS 600–EP includes a 9-slot DECNIS enclosure (120V/240V), 19–inch rackmount kit, management processor and pool memory, DEC LANcontroller 601, DEC WANcontroller 622, and routing and bridging software licenses. Three interface options are available:	
DECNIS 600–EP X.21 Leased Line	DNSEA–BC/BD+
DECNIS 600–EP V.35	DNSEB–BC/BD+
DECNIS 600–EP RS422	DNSEC–BC/BD+
The DECNIS 600–RP includes a 9-slot DECNIS enclosure (120V/240V), 19–inch rackmount kit, management processor and pool memory, DEC LANcontroller 601, DEC WANcontroller 618, and a routing software licenses. Three interface options are available:	
DECNIS 600–RP V.35	DNSED–BC/BD+
DECNIS 600–RP RS422	DNSEE–BC/BD+
DECNIS 600–RP EIA–232	DNSEF–BC/BD+
+ BD version includes U.S. power cord; BC version requires appropriate country kit.	
Country Kits	
DECNIS country kit	DNSXC-A*
* Replace the * with one of the following codes: A (United States and Canada), D (Denmark), E (United Kingdom and Ireland), I (Italy), K (Switzerland), T (Israel), X (Central Europe), Z (Australia, New Zealand)	

DECNIS 600 Base Hardware System Order Codes (Continued)

Option	Order Code
Network Interface Cards	
DEC LANcontroller 601, 1 port IEEE 802.3	DNSAE-AA
DEC WANcontroller 618 V.35 pkg	DNSCA-AB
DEC WANcontroller 618 422/V.11 pkg	DNSCA-AC
DEC WANcontroller 618 EIA-232 pkg	DNSCA-AD
DEC WANcontroller 622-X.21LL/KS	DNSCB-AA
DEC WANcontroller 622-V.35	DNSCB-AB
DEC WANcontroller 622-422/V.11	DNSCB-AC
Test Loopback, 50-way	DNSXT-CA
Software Licenses and Media	
DECNIS Router W/W Lic	QL-GX7A9-AA
DECNIS Bridge W/W Lic	QL-GZNA9-AA
DECNIS S/W V1.0 VMS	QA-GX7AA-H*
DECNIS S/W V1.0 VAX ULTRIX	QA-GX7AB-H*
DECNIS S/W V1.0 RISC ULTRIX	QA-GX7AC-H*
*H = TK50, M = magtape	

All options and accessories can be ordered separately. For further information, contact your local Digital sales office. ▲ Refer to the following for further information:

- Software Product Description 36.05.00
- System Support Addendum 36.05.00-A

DECNIS 500

The DEC Network Integration Server 500 (DECNIS 500) is a smaller version of the DECNIS 600. It acts as a high-speed multiprotocol router and bridge that provides high-bandwidth connections into backbone networks for remote sites.

The DECNIS 500 uses the same modular design and architecture as the larger DECNIS 600, and provides two module slots for LAN and/or WAN network interface cards. These cards are identical to and interchangeable with the DECNIS 600.

Preconfigured System

- DECNIS 500–EP — This is the entry level package for high-speed routing and bridging. The DECNIS 500–EP preconfigured system includes a DEC LANcontroller 601, a DEC WANcontroller 622, and routing and bridging software licenses.
- DECNIS 500–RP — This is the entry level package for low-speed routing services. The DECNIS 500–RP preconfigured system includes a DEC LANcontroller 601, a DEC WANcontroller 618, and a routing software license.

DECNIS 500 Specifications	
Physical Characteristics	
Height	20.7 cm (8.15 in)
Width	48.2 cm (19 in)
Depth	35.5 cm (13.97 in)
Weight	16 kg (35.2 lb)
Power Requirements	
Nominal	100 V_{rms} to 120 V_{rms} (120 V) 200 V_{rms} to 240 V_{rms} (240 V)
Range	50 Hz to 60 Hz
Consumption	287 W (max)

Features

The DECNIS 500 operates the same software as the DECNIS 600 product.

▲ Refer to the section on the DECNIS 600 for supported features and functions.

Ordering Information

DECNIS 500 Packaged System Order Codes

Option	Order Code
The DECNIS 500–EP includes a 4-slot DECNIS enclosure (120V/240V), 19–inch rackmount kit, management processor and pool memory, DEC LANcontroller 601, DEC WANcontroller 622, and routing and bridging software licenses. Three interface options are available:	
DECNIS 500–EP X.21 Leased Line	DNSDA–BC/BD+
DECNIS 500–EP V.35	DNSDB–BC/BD+
DECNIS 500–EP RS422	DNSDC–BC/BD+
The DECNIS 500–RP includes a 4-slot DECNIS enclosure (120V/240V), 19–inch rackmount kit, management processor and pool memory, DEC LANcontroller 601, DEC WANcontroller 618, and a routing software license. Three interface options are available:	
DECNIS 500–RP V.35	DNSDG–BC/BD+
DECNIS 500–RP RS422	DNSDH–BC/BD+
DECNIS 500–RP EIA–232	DNSDI–BC/BD+

+ BD version includes U.S. power cord; BC version requires appropriate country kit.

Country Kits	
DECNIS 500 country kit	DNSXD-A*

* Replace the * with one of the following codes: A (United States and Canada), D (Denmark), E (United Kingdom and Ireland), I (Italy), K (Switzerland), T (Israel), X (Central Europe), Z (Australia, New Zealand)

Software Licenses and Media	
DECNIS Router W/W Lic	QL-GX7A9-AA
DECNIS Bridge W/W Lic	QL-GZNA9-AA
DECNIS S/W V1.0 VMS	QA-GX7AA-H*
DECNIS S/W V1.0 VAX ULTRIX	QA-GX7AB-H*
DECNIS S/W V1.0 RISC ULTRIX	QA-GX7AC-H*

*H = TK50, M = magtape

▲ Refer to the following for further information:

- Software Product Description 36.05.00
- System Support Addendum 36.05.00-A

DEC ISDNrouter 100

The DEC ISDNrouter 100 provides DECnet routing via ISDN Basic Rate Access circuit switching and supports up to six 64 Kb/s B-channel, circuit-switched connections to remote DECnet nodes over ISDN. The product is a dedicated routing system that supports both inter-area (Level 1) and intra-area (Level 2) routing for Phase IV nodes on the LAN, or remote nodes connected through any of the six ISDN circuits. The ISDNrouter also supports DDCMP point-to-point links and "path splitting."

The DEC ISDNrouter 100 is a packaged ISDN Basic Rate Access router system bundled with VMS, DECnet and VAX ISDN software licenses. The VAXserver 3300 system (without tape), with up to three DEC ISDNcontroller 100 cards, provides the hardware base for the DEC ISDNrouter 100, and allows interconnecting of an Ethernet LAN and the ISDN wide area network (WAN).

The DEC ISDNrouter 100 offers all the benefits of a single-vendor integrated solution and will foster new applications development such as telemarketing or enhanced solutions.

▲ For further information regarding the VAXserver 3300 system, refer to its product description in the *VAX Systems and DECsystems Systems and Options Catalog*.

Features

- Allows DECnet routing on ISDN Basic Rate Access circuits.
- Operates at speeds of 64 Kb/s for up to six ISDN B-channel connections.
- Single-vendor integrated solution for the new telephony infrastructure (ISDN).
- Easy-to-order, affordably packaged product.

Prerequisite Hardware

- Any DEC ISDNrouter 100 package specified in the order code table; an ISDN service subscription; appropriate ISDN cabling of user premises.
- A VAX system connected to the same Ethernet LAN as the DEC ISDNrouter 100.
- An appropriate device available to read the software during installation.
  ▲ Refer to the Software Product Description for supported devices.

Prerequisite Software

VMS operating system V5.2-1 or higher with DECnet VAX on the VAX system.

Ordering Information

The entry level DEC ISDNrouter 100 bundled system includes tapeless VAXserver (bundled with VMS and DECnet full-function node licenses), one DEC ISDNcontroller 100, loopback connectors, VAX ISDN software license, *DIV32 Installation Guide*, *DEC ISDNrouter 100 Installation Guide*, and one VT320 and keyboard. See the Order Code table below for ordering the DEC ISDNrouter 100 with additional DEC ISDNcontroller 100 cards.

Order separately at least one copy of the distribution and documentation kit. The ISDN communication cable (BC23T for United States and France, and BC23U for Germany) and a power cord must also be ordered separately.

DEC ISDNrouter 100 Hardware Order Codes

Option	Order Code
DEC ISDNrouter 100 (2B+D), 120 V	DISDN-A2
DEC ISDNrouter 100 (2B+D), 240 V	DISDN-A3
DEC ISDNrouter 100 2x (2B+D), 120 V	DISDN-B2
DEC ISDNrouter 100 2x (2B+D), 240 V	DISDN-B3
DEC ISDNrouter 100 3x (2B+D), 120 V	DISDN-C2
DEC ISDNrouter 100 3x (2B+D), 240 V	DISDN-C3

▲ Refer to the following for further information on supported processors and services:

- VAX ISDN Software Product Description 31.23.00
- VAX ISDN Unique Product Identifier VZ9

TransPATH 335
TransPATH 350

Summary of 802.3/Ethernet Routers

Product	TransPATH 335	TransPATH 350
Hardware Type	DETLB	DETLB
Number of Lines/ Maximum Throughput	2 at 2 Mb/s	8 at 56 Kb/s up to 3 Mb/s 2 × T1 lines
Multi CPU Access	Yes	Yes
Modem Control	Full	Full
Protocols	TCP/IP	TCP/IP
Downline Load Host Support	Floppy-based	Floppy-based
Operational Host Support	Host-independent	Host-independent
Primary Buying Reason	Provides routing for TCP/IP protocol and protects the bridged network from TCP/IP overhead	Provides routing for TCP/IP protocol and protects the bridged network from TCP/IP overhead

Vitalink TransPATH bridge/router combines a TCP/IP router with a high-speed, protocol-independent bridge in one integrated product. Based on the TransLAN Bridge 335 or 350, the TransPATH provides all the benefits of a TransLAN bridge while simultaneously routing the TCP/IP protocol. TransPATH will keep TCP/IP broadcasts off the network, saving bandwidth for true user data. Furthermore, this sophisticated hybrid product can communicate with your existing TransLAN bridges, insuring true best-path routing in your complex network. Other protocols such as IPX, XNS, and DECnet Phase IV will be added in future software releases.

Features

- Combines a TCP/IP router and a link level bridge in one hardware platform; routes TCP/IP while bridging all other IEEE 802.3/Ethernet protocols.
- Shares information with bridges to make better routing decisions.
- Incorporates all existing Vitalink bridging features; makes use of existing TransLAN bridges.
- Allows use of switched dial-up 56 Kb/s services for both bridging and routing functions.
- Includes the Vitalink Management Program, adds advanced routing diagnostics, and allows you to change traffic filters without network downtime.
- Supports the Telnet protocol and the Simple Network Management Protocol (SNMP) MIB II.
- Supports three types of Address Resolution Protocol: ARP, Proxy ARP, and Proximate ARP.
- Designed to be easily implemented and to operate in a "plug and play" mode.

Specifications

	TransPATH 335	**TransPATH 350**
Physical Dimensions		
Height	8.9 cm (3.5 in)	13.2 cm (5.2 in)
Width	43.7 cm (17.2 in)	44.5 cm (17.5 in)
Depth	57.8 cm (22.75 in)	59.7 cm (23.5 in)
Weight	7.5 kg (16.5 lbs)	14.5 kg (32 lbs)
Power Requirements		
Voltage tolerance	100 Vac to 130 Vac 200 Vac to 260 Vac	100 Vac to 130 Vac 200 Vac to 260 Vac
Power consumption	150 W	200 W
Frequency	47 Hz to 63 Hz	47 Hz to 63 Hz
Operating Environment		
Temperature	5°C to 40°C (41°F to 104°F)	5°C to 40°C (41°F to 104°F)
Relative humidity (noncondensing)	10% to 90%	10% to 90%

Specifications		
	TransPATH 335	**TransPATH 350**
Number of Lines	2	1 to 8
Number of T1 Lines	2	2
Max Line Speed (Kb/s)		
One line	2,048	2,048
Multiple line aggregate	3,088	3,088
Filtering Rate (frames/sec)	14,880	14,880
Forwarding Rate (frames/sec)		
Bridging	6,800	6,800
Routing	3,000	3,000
Combined	3,000	3,000

Ordering Information

▲ Refer to the following order codes for specific models available. One part number includes hardware, software, license, media, and documentation. The units are configurable for either 120 V or 240 V operation. The Universal Interface Card (UIC) serial port can be configured for V.35, V.36 RS449/422 or X.21, depending on the selection of the interface cable. For more information regarding the TransLAN bridge, contact your local Digital sales representative, or call the Digital Sales Support Team at 1-800-832-6277.

The TransPATH 335 and 350 products are available through Digital in the United States, Europe, and GIA geographies.

TransPATH System Order Codes		
	TransPATH 335	**TransPATH 350**
V.35/V.36 UIC		
2-port	DETLB-GB	
4-port		DETLB-TT
8-port		DETLB-TU
CCITT V.35		
2-port	DETLB-GA	
4-port		DETLB-TW
8-port		DETLB-TX
DS1		
1-port		DETLB-TK
2-port		DETLB-TM

▲ For further information on TransPATH options, refer to the TransLAN Bridge description in "Extended 802.3/Ethernet Local Area Network Products" in this section.

3

Connectivity: FDDI

This section contains the following topics:

FDDI Overview	3-1
FDDI DECconcentrator Family	3-8
FDDI DECbridge Family	3-26
FDDI Network Management	3-40
FDDIcontroller Family	3–41

Connectivity: FDDI

Digital's next generation of high-speed LAN solutions provides standards-compliant 100 Mb/s network communications with complete 802.3/Ethernet interoperability.

FDDI Network Overview

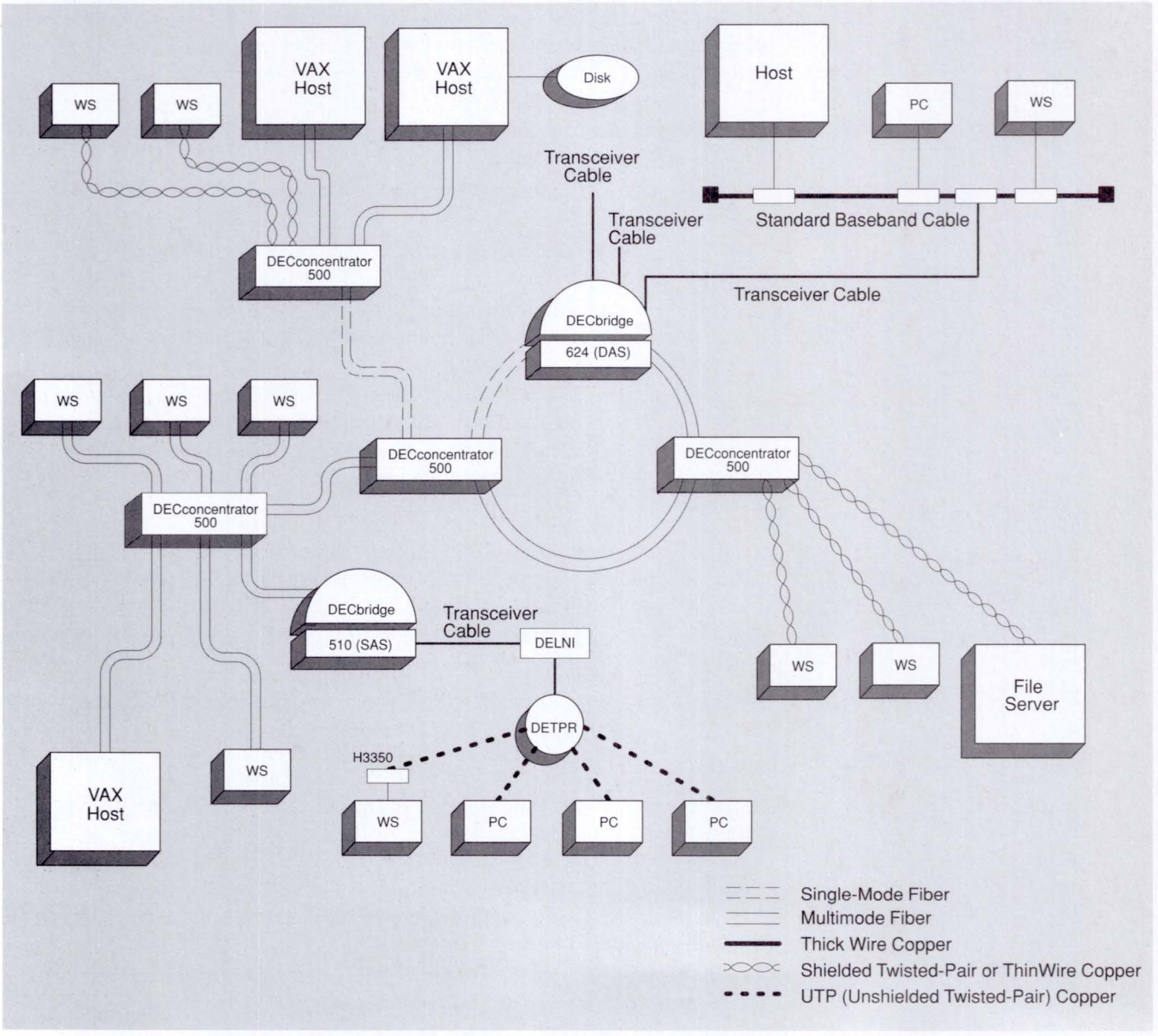

TBG-055-00

FDDI is an industry-standard solution for organizations needing flexible, robust, high-performance networks that are ten times faster than today's 802.3/Ethernet offerings.

The first LAN standard optimized for fiber optics, FDDI, implements a 100 Mb/s dual ring of trees, a timed token-passing network that will meet data-intensive networking needs in the 1990s. FDDI can operate as a dedicated communications channel or interoperate with existing 802.3/Ethernet products as a high-speed backbone supporting one or more mid-speed 802.3/Ethernet subnetworks.

Features

- Runs at 100 Mb/s, a data transmission rate that makes FDDI significantly faster than current LAN technologies, to satisfy demanding communications requirements.
- Dual ring of trees topology permits use of one ring as the primary data ring, the second ring as a backup, and the tree for increased network flexibility, manageability, and availability.
- Standards-based to ensure interoperability with existing and future multivendor networks.
- Employs multimode and single-mode fiber optic cable for the transmission medium.
- Uses reliable light emitting diodes (LEDs) as the optical transmitters and photo diodes (PIN) as the optical receivers for multimode fiber, and laser technology for single-mode fiber transmission.
- Supports a maximum of 500 network devices, a maximum ring circumference of 100 km (62 miles), a maximum distance between multimode fiber stations of 2 km (1.2 miles) for flexible network connections and configurations, and 40 km (25 miles) distance between stations using single-mode fiber.

The Need for High-Performance Network Solutions

Evolving computing requirements will lead large corporations, educational institutions, and other organizations to migrate to FDDI LAN technology. Fiber optics represent the most viable and practical long-term backbone solution for the increasing volume of communications placed on every sector of the data-processing marketplace.

High-performance solutions for today's organizations will need FDDI technology because

- The increasing number of users will require a larger network bandwidth
- Larger geographic spans and higher-performance computing engines (including high-powered systems and workstations) will contribute to the demand for high-performance networking solutions
- Client/server distributed systems, diskless workstation configurations, and compute-intensive distributed applications are being used more widely, placing greater demands on mid-speed networks
- Organizations are demanding network solutions that conform to international standards and coexist with established LAN standards to support multivendor computing environments

FDDI — The Premier High-Speed Networking Technology

The one technology that consistently meets the latest high-performance corporate networking and communications criteria is FDDI. In development since 1982, all but one of the FDDI components meet the standards in the American National Standard Institute (ANSI) Accredited Standards Committee X3T9.5 (ANSI ASC X3T9.5) and the International Organization for Standardization (ISO). FDDI is widely accepted in the industry as the "next-generation" international standard for high-speed multivendor networking.

A networking standard that has grown out of consensus, FDDI stands in contrast to some current LAN standards, which are frequently associated with specific vendors. It is supported by system suppliers, workstation manufacturers, network vendors, silicon chip producers, makers of specialized communications products, and other industry players.

The entire FDDI product set uses Digital's own high-performance ANSI-compliant FDDI chipset.

FDDI Network Integration

To date, the most popular network technology has been 802.3/Ethernet, the multivendor LAN standard upon which Digital's LANs are based today. Because 802.3/Ethernet networks provide flexible, modular growth, customers can expand their computing resources while preserving their investment in existing systems.

Although the demand for FDDI-class, high-speed networks is strong, many organizations, from manufacturing and health care to education and aerospace, will continue to build and expand 802.3/Ethernet-based networks. These networks, which combine flexible growth, reliable operation, and low cost per connection, will remain attractive to customers for years to come.

FDDI's ability to interoperate seamlessly with existing 802.3/Ethernet networks is a benefit for many organizations that plan to implement high-performance FDDI network backbones. FDDI gives customers the ability to upgrade and integrate their networks at their own pace, without rendering present network equipment unusable or obsolete.

Network Components

Today's FDDI technology specifically defines the networking components required to conform to the industry standard. Along with the fiber optic cable, and the basic dual ring of trees topology, the standard defines specific devices used in the network. From these definitions, vendors produce standards-compliant concentrators, bridges, and controllers for workstations and computing systems attached to the FDDI network.

Backbone Solutions

Typical FDDI installations will use these components to provide intrabuilding and interbuilding communications through the FDDI network backbone. Concentrators and bridges will be used to build hierarchical interconnections for departmental systems or interconnections to other LANs, either FDDI or 802.3/Ethernet. Building installations will see the use of fiber backbones with bridges to provide interconnections to horizontal LANs. This multilevel approach will be replicated in the other buildings that comprise the computing complex.

While specific physical network topologies will vary according to need, the most common physical topology for backbone applications will be the dual ring of trees. Customers can construct "treed" topologies by cascading concentrator devices several levels deep.

Over the years, Digital customers have demonstrated the need for reliable networks. For the utmost in simplicity, manageability, and reliability, Digital's FDDI implementation employs concentrators and/or bridges that can be used in dual ring as well as tree structures. Standard single attachment station (SAS) devices such as systems, workstations, and bridges are directly connected to the FDDI LAN via the concentrator. This interconnection provides for the addition or removal of SAS devices in a nondisruptive manner that preserves the operational integrity of the backbone. Additional network fault tolerance may be provided by configuring alternate paths to specific devices, a technique known as "dual homing."

Workgroup Solutions

Complementing the backbone application of FDDI, some organizations may use FDDI to provide high-performance network solutions for workgroups. FDDI is applicable in both environments, workgroup as well as backbone.

Additionally, FDDI will be employed in smaller, unstructured environments (see Section 2, "OPEN DECconnect: Structured vs Unstructured Cabling"). Here the technology will provide high-speed interconnections for workstations and servers where small, dedicated workgroups require the bandwidth. If growth is planned for this type of environment, a structured fiber optic wiring system, OPEN DECconnect, would be recommended.

FDDI VAXcluster Solutions

By combining FDDI networking with VAXcluster technology, a computer system can be configured with its components spread out over several miles. The resulting configuration appears as a single computer, and when it is combined with appropriate disaster planning, it will enable vital applications to continue running at another site within minutes of the loss of any one data center. This combination of technologies yields the first true disaster tolerant system.

FDDI Copper Integration

FDDI over copper media has been developed by Digital to address the expansion of FDDI to the desktop. Copper-based FDDI offers two significant advantages:

- Ability to use existing ThinWire and Shielded Twisted-Pair (STP) structured cable plants
- Significant reduction in cost-per-connection

Both the ThinWire and STP products support point-to-point links of up to 100 meters (328 feet). Given that over 98% of data cable runs to the desktop fall within this range, this is not a major limitation for desktop FDDI applications.

FDDI Network Management Solutions

Digital's FDDI and IEEE 802.3/Ethernet bridge products and the DECconcentrator 500 are self-operating and self-managing. DECmcc Extended LAN Manager software significantly enhances operations by enabling a network manager to configure, monitor, control, and troubleshoot these devices from a single station, and to implement many important bridge and concentrator functions. For example, DECmcc Extended LAN Manager promotes security and control by supporting closed user groups and restricting subnetwork access through the use of settable destination/source address and protocol filtering in the DECbridge 500/600 series and LAN Bridge 200.

Digital's FDDI Product Set

Digital offers the following FDDI products.

DECbridge 500 and 600 series — LAN interconnect devices that provide the interconnection between mid-speed 10 Mb/s 802.3/Ethernet LAN(s) and a 100 Mb/s FDDI network backbone. Two comprehensive product lines are available:

- DECbridge 500 series — FDDI to one 802.3/Ethernet LAN
- DECbridge 600 series — FDDI to three 802.3/Ethernet LANs

Compared to the existing DECbridge 500 product, the following new functionality is provided in the DECbridge 500/600 series:

- Direct connection to the FDDI network as a dual attachment station (DAS) device
- Simple Network Management Protocol (SNMP) functionality
- Dual homing support for DAS versions
- Capability to extend distances between FDDI stations to 40 km (25 miles)
- External optical bypass device support for DAS multimode versions

DECconcentrator 500 — Provides for the attachment of FDDI devices such as workstations, systems, or bridges to the high-speed network ring. The device uses modular components and may be configured for different topologies, such as the dual ring of trees.

The DECconcentrator 500 now supports media options for both fiber and copper interconnection. Each media option supports a specific distance for varied campus, building, or departmental FDDI applications. This FDDI device offers unparalleled flexibility for station attachment.

As a backbone interconnect, the DECconcentrator 500 device offers management modules, providing connection to the primary and secondary FDDI rings. The port modules are used to attach FDDI devices to the primary ring through the concentrator. As a standalone device, the concentrator can accommodate up to three 4-port or 6-port modules, creating a high-performance FDDI workgroup network of up to eighteen stations.

For configuring a network in a dual ring of trees — the predominant building and campus FDDI LAN topology — the dual-attachment DECconcentrator 500 with management and port modules provides considerable flexibility.

DECmcc Extended LAN Manager, DECmcc Management Station for ULTRIX, and **DECelms** — Provide network management alternative solutions for configuring, monitoring, and controlling Digital's FDDI concentrators, 802.3/Ethernet-to-FDDI bridges, and 802.3/Ethernet LAN Bridges.

DEC FDDIcontroller 700 — Enables a fiber optic SAS connection of the DECstation 5000/DECsystem 5000 to FDDI networks via the DECconcentrator 500.

DEC FDDIcontroller 700-C — A copper-based SAS FDDI controller that has connections for either 150-ohm Type 1, 2, and 6 STP, or 50-ohm ThinWire coaxial cable, and is switch-selectable between the two.

DEC FDDIcontroller 400 — Enables VAX 6000 and VAX 9000 systems and servers to operate as native FDDI SAS devices via fiber optic connection to an FDDI concentrator in a high-speed FDDI ring.

Software Upgrade Packages for Installed FDDI Products

For those customers who currently have DECconcentrator 500s, DECbridge 500/600 series, DEC FDDIcontroller 700s, and/or DEC FDDIcontroller 400s installed, software upgrade packages are available that provide the latest in FDDI features and functionality. The new features are added using a downline-load utility to upgrade the device's permanently resident firmware over the network. This utility is used to load new versions of FDDI-specific software into the FDDI device. It is included as part of each software enhancement package and does not need to be ordered separately.

Each Software Upgrade Package contains the FDDI device-specific software and documentation along with the downline-load utility license, media, and documentation. ▲ For more information, refer to *FDDI Networking, Digital's Next Generation of High-Speed LAN Solutions* (EC-F0542-42), and *A Primer to FDDI: Fiber Distributed Data Interface* (EC-H0750-42).

Automatic Subscription Software Update Service for Digital's FDDI Products

Digital offers a wide variety of FDDI products based on the ANSI FDDI standard. As this standard evolves, Digital is committed to stay compliant with the standard. Often this means enhancements and software fixes to our existing FDDI software microcode.

As these new versions of FDDI software become available, customers are required to learn that a new version of software is available, and then place an order for this new version of FDDI software. With the availability of the FDDI Software Update Subscription Service, customers will now have two options. They can choose to continue tracking and ordering new versions of FDDI software as they become available, or they can now purchase the FDDI Software Update Subscription Service.

This subscription service sends new versions of customer installable software directly to the customer. The customer then updates their FDDI devices at their convenience. This service will be offered for each FDDI device.

The Subscription service is renewable annually. As the yearly subscription approaches its expiration date, customers are automatically notified about how and when to renew the service subscription offering without a lapse in service.

For customers who have purchased multiple devices of the same type, we also offer a Subscription Service Without Media. This Service allows the customer to use the software upgrade kit on another like device.

Example

As an example, if a customer purchases 10 FDDI DECbridges, the customer would also have the option to purchase one QY-xxxxx-xx DECbridge Software Update Subscription Service and nine Qx-xxxxx-RA DECbridge Subscriptions Without Media.

If this customer did not choose to purchase the subscription service, the customer would order one QB-xxxxx-xx DECbridge Software Update Package and nine DECbridge update licenses **each time a new version of software becomes available** for the DECbridge.

Package Content

Each time a new revision of FDDI software becomes available for an FDDI device, DIGITAL makes the new software available for customers to order via a QB-xxxxx-xx FDDI "Device Specific" Software Update package.

Each update kit that is obtained through this Subscription Service contains the following

- QL-xxxxx-AA – DECndu (Network Device Upgrade) Utility License
- QA-xxxxx-xx – DECndu (Network Device Upgrade) Utility Media/Doc
- QA-xxxxx-xx – "Device Specific" Software
- QL-xxxxx-RA – "Device Specific" Update License

The DECndu Utility is the application that allows a user (Network Manager), at a host in an "extended LAN" to update the existing version of software within the FDDI devices.

The Software Subscription Service ensures that each time an updated version of the QB-xxxxx-xx FDDI "Device Specific" Software Update package becomes available for a hardware device, that new version will be sent directly to the customer. This ensures that the customer's FDDI devices are at the latest revision of supported software. ▲ Refer to the Order Information section in each product area for more detail on the packages offered.

DECconcentrator 500

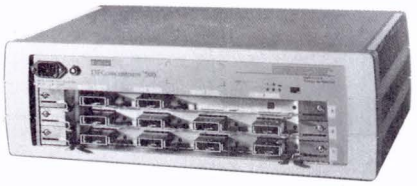

The DECconcentrator 500 FDDI hub solution provides for the attachment of FDDI devices such as workstations, systems, or DECbridge units to the FDDI LAN. The DECconcentrator 500 is available in modular configurations and multiple media choices.

As a backbone interconnect, the DECconcentrator 500 offers two ports to connect to the primary and secondary FDDI rings, and one or two 4-port or 6-port modules for connection of up to 12 FDDI devices. As a standalone device, the concentrator can accommodate up to three 4-port modules, three 6-port modules, or a combination of both, creating a high-performance FDDI workgroup of up to 18 stations.

For configuring a network in a dual ring of trees — the predominant building and campus FDDI LAN topology — the dual-attachment DECconcentrator 500 with station ports provides considerable flexibility. This device permits the construction of hierarchical topologies by cascading DECconcentrator 500 devices several levels deep.

The DECconcentrator 500 can be used to connect high-performance systems and workstations to the FDDI network and establish FDDI backbone connections to 802.3/Ethernet networks and subnetworks via DECbridge 500 and 600 series devices. As a standalone device, it can be used to create small, dedicated high-performance LANs for specialized communities of users.

The DECconcentrator 500 platform also provides for the use of single-mode fiber (SMF) optical connections. Digital provides multiple variations of FDDI management (A/B) and port cards to accommodate SMF and afford interstation links far in excess of the 2 km (1.2 mi) limit for multimode fiber. You can use SMF connections in both the backbone ring and the "treed" concentrator configured as a single attachment station (SAS). The connections in the following figure require A/B (network management) cards in each concentrator. Single-mode connections may also be used to provide long-distance dual-homing links. This is important in "treed" or radial topologies where absolute network link or device fault tolerance is required.

FDDI Backbone

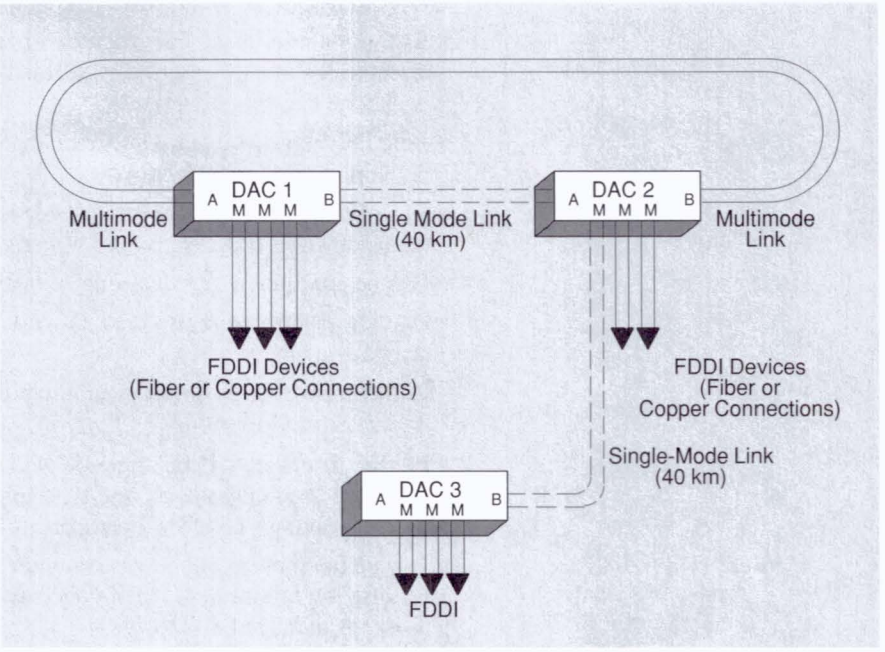

TBG-166–01

Features

- SNMP agent — allows the network manager to configure, control, and change device parameters in a multivendor environment via "sets and traps."
- Designed to offer modularity, cost-effective FDDI connectivity, and multiple wiring choices.
- Offers standards-compliant (ANSI X3T9.5 committee and ISO) FDDI technology.
- Media flexibility — provides cost-effective FDDI connectivity for both ANSI multimode and single-mode fiber, low power optics, and STP and ThinWire copper cable.
- Provides copper-based FDDI 6-port option modules: DEFCN-S port card for shielded twisted-pair (STP) cable, and the DEFCN-T port card for ThinWire coaxial cable.
- Provides multimode fiber connection to support distances up to 2 km (1.2 miles) between FDDI stations, and single-mode fiber connection to support distances of 40 km (25 miles) between FDDI concentrators and concentrators/bridges.
- Supports attachment of single- or dual-attachment FDDI stations (SAS and DAS) such as bridges, systems, workstations, and other concentrators to the FDDI ring.
- Use of DECconcentrator 500 and SAS interconnection optimizes topological flexibility by reducing complicated configuration rules and limitations characteristic of an FDDI ring in which only DAS is used.

- Provides dual homing redundancy for enhanced fault tolerance.
- Optical bypass relay support maintains dual-ring integrity.
- SAS ports provide device insertion or removal with minimum network disruption and inadvertent ring segmentation, preserving the integrity of the backbone and subnetworks.
- Remotely manageable by DECmcc management software or a third-party network management system.
- Out-of-band management provides device-specific management when inband management is blocked, or as a lower cost management alternative.
- Can be configured in a dual ring of trees topology for scalability and growth.
- Provides dedicated high-speed network connectivity to small workgroups in standalone mode.
- Robust construction and proven reliability ensure maximum uptime and trouble free network operation.
- Product firmware can be upgraded without changing modules or chips by using downline-load upgrade capability to implement enhancements such as changes to the evolving FDDI SMT standard.
- Device fan monitoring — detects and remotely informs the network manager of cooling fan failure in the DECconcentrator 500 to allow repair before the device is damaged.

Copper Integration Features

FDDI over copper media has been developed by Digital to address the expansion of FDDI to the desktop through the following features:

- Low cost per connection, permitting more flexible use of media for FDDI, to support network-intensive desktop applications.
- Use of existing cable plant, providing an effective migration path from mid-speed LANs to FDDI.
- Greater media options in cases where long distances are not required.
- Adapter connector options, permitting greater flexibility for workstation or server participation in the FDDI network.

Copper Integration Solutions

Digital's FDDI copper products provide solutions for cases where

- Workgroup users, in close proximity, need FDDI bandwidth.
- Small-to-medium sized servers require FDDI connection to support systems and applications in a contained, copper-based topology.

Digital's FDDI copper solutions may be applied where users have

- A ThinWire and/or Shielded Twisted-Pair structured cable plant with point-to-point (non-daisy chained) connections of 100 meters (328 feet) or less.
- TURBOchannel based DECstations, workstations, and DECsystem servers needing direct FDDI connectivity.
- Applications such as imaging, multimedia, or CAD/CAM that require FDDI bandwidth and performance to the desktop.

Single-Mode Fiber Features

- Provides direct, single-mode fiber connection to the DECconcentrator 500.
- Increases distances between adjacent FDDI stations from 2 km to 40 km.
- Uses laser technology, telco-standardized single-mode fiber media and common single-mode FC-PC connectors.
- Provides a cost-effective implementation that makes use of the existing Digital FDDI platform and augments existing FDDI products.
- Complies with the X3T9.5 standard for single-mode PMD.

Single-Mode Cards

Single-mode optics, used in both A/B (network management) and port cards for the DECconcentrator 500, provide a larger optical loss budget than does ANSI multimode. SMF cards are equipped with optical laser drivers that are designed to make use of the superior transmission properties of single-mode fiber.

In mixed topologies, SMF and multimode devices will interoperate in the same manner as in a multimode topology. The loss budget associated with 9/125 micron SMF is 22 dB, as opposed to the 11 dB loss budget for graded index 62.5/125 micron multimode fiber. Instead of MIC or ST connectors, SMF uses FC-PC connectors.

Single-Mode Card Features

- Single-mode transceivers are transmit and receive pairs of optics that have higher power budgets than ANSI standard LED optics.
- Using SMF, the achievable interstation distances can be 40 kilometers, provided the optical power loss budget of 22 dB is met.
- SMF provides greater flexibility in configuring large scale campus, corporate, or research networks.
- Offers the advantage of using both multimode and single-mode optics, as well as copper options, in the same device. This allows for the most cost-effective implementations, simple upgrade, and consistent management for the DECconcentrator 500.

Optical Bypass Relay Support

A new ANSI multimode network management (A/B) module includes an RJ12 (modular jack) connection that allows the concentrator to control a third-party Optical Bypass Relay (OBR). This feature maintains dual ring integrity during a local power failure or if a fault condition occurs in the concentrator. The OBR allows the data stream to bypass the off-line device, thus maintaining the operation of the FDDI dual ring.

Use of an OBR brings with it an optical power penalty that results in a reduction in the maximum fiber cable distance that is allowed between adjacent stations on the ring. ▲ Refer to the FDDI Configuration Guidelines in Appendix A for more information regarding OBR support.

Management Capabilities

The DECconcentrator 500 has traditionally included inband management. This feature allows the concentrator to be managed, along with other devices in the network, by a network management system (NMS), using such software as Digital's DECmcc Extended LAN Manager. Supported initially by Digital's RBMS protocol (sets and shows) and more recently by the industry-standard SNMP protocol (shows), the DECconcentrator 500 management capability now also includes SNMP sets and traps. A network manager in a multivendor environment can take advantage of such features as password protection and enabling/disabling ports in the DECconcentrator 500 using Digital's or any third-party's NMS.

At the time of this writing, the DECconcentrator 500 supports the following Management Information Bases (MIBs):

- MIB II (RFC 1213)
- Draft IETF FDDI MIB
- Digital vendor MIB extensions

The addition of out-of-band management (OBM) extends the versatility of the DECconcentrator 500 by providing an alternative local or remote path for the network manager to access the DECconcentrator 500 if inband management is blocked. It also provides a lower cost concentrator management solution, when compared with host-based network management solutions, for small, single concentrator FDDI workgroup configurations.

Device-specific, OBM is implemented through the use of an ASCII terminal connected to an RS232 connector on the DECconcentrator box. You can also connect a remote terminal to the concentrator via an intelligent modem (SCHOLAR Plus or equivalent). Information is accessed directly from data structures in the concentrator software microcode and thus is not management protocol specific (that is, no dependency on SNMP, RBMS, etc.). Using OBM, a network manager can display and set major configurable DECconcentrator parameters, such as device status, and enable/disable ports.

Access to the OBM port is password protected, thus preventing unauthorized changes to settable parameters. The user interface consists of command menus allowing immediate display of the different commands (i.e., no command line editing). Most commands are invoked by a "hot key," allowing the user to enter the number appearing beside the command without having to follow it with a carriage return.

The DECconcentrator 500 and all option cards fully support the ANSI SMT network management capabilities. And, like all other Digital FDDI devices, it takes firmware upgrades simply, without hardware changes. New code revisions (such as future enhancements to SMT) are downline loaded over the network.

▲ For further information on DECmcc management software, refer to Section 7.

Specifications

Physical Characteristics	Without Enclosure for Rackmount	With Enclosure for Tabletop
Height	13.33 cm (5.25 in)	16.1 cm (6.34 in)
Width	43.59 cm (17.16 in)	49.3 cm (19.41 in)
Depth	29.85 cm (11.75 in)	31.3 cm (12.33 in)
Weight	7.95 kg (17.5 lb)	9.97 kg (22 lb)
Power Requirement		
Low-range line voltages	88 to 132 Vac	
High-range line voltages	176 to 264 Vac	
Frequency tolerance	47 to 63 Hz	
Maximum ac watts drawn	120	
Operating Environment		
Temperature	5 to 50° C (40 to 130° F)	
Relative humidity	10% to 95% (noncondensing)	
Performance Characteristics	DECconcentrator 500 supports the maximum packet rate allowable by the FDDI standard.	
Cascading of Concentrators	DECconcentrator 500 supports the hierarchical connection of concentrators, as specified in the ANSI FDDI standard.	

Power Budget and Distance Specifications by Media Type

Fiber (diameter in microns)	Power Budget (dB loss budget)	Interstation Distance (in kilometers)[1]
DEFCN-Mx, DEFCN-Nx		
Multimode types:		
50/125	6 dB[2]	2.0 km[3]
62.5/125	11 dB	2.0 km[3]
85/125	11 dB	1.6 km[3]
100/140	11 dB	1.6 km[3]
Single-mode types:		
8 – 10/125	22 dB[4]	40 km[3,5]
DEFCN-Lx		
Multimode types:		
50/125	3 to 5 dB[2]	1.0 km (if loss budget is met)[3]
62.5/125	7 dB	1.0 km[3]
Copper	**Power Budget (dB loss budget)**	**Distances (in meters)[1] Concentrator to Workstation/Server**
DEFCN-Tx, DEFCN-Sx		
ThinWire:		
High-grade, 50-ohm coaxial, RG-58	12 dB	100 m
Shielded Twisted-Pair:		
Type 1 or 2 150-ohm	12 dB	100 m

[1]With no more than 4.0×10^{-11} bit error rate.

[2]The 50 µm fiber loss budget is very dependent on the quality and numerical aperture (NA) of the fiber.

[3]Fiber optic cable must meet modal bandwidth and chromatic dispersion requirements specified by the ANSI FDDI standard.

[4]The minimum required loss is 12 dB.

[5]Fiber is standard telecommunications-grade dispersion unshifted EIA/TIA for 92BAAA.

The following matrix depicts the valid rules and considerations for connecting FDDI concentrators with other FDDI devices. This takes into account rules for dual homing concentrators as well.

DECconcentrator 500 (FDDI) Connection Rules Matrix

Connection to:		**This Node**			
Other Node	**Port**	**A**	**B**	**M**	**S**
	A	No	Rule 1	Yes	Yes
	B	Rule 2	No	Yes	Yes
	M	Rule 3	Yes	No	Yes
	S	Yes	Yes	Yes	Yes

Yes = Accepts this connection
No = Does not accept this connection

Rule 1: Port B of **This Node** accepts connection to Port A of **Other Node** if Port A of **This Node** is not connected, or if Port A of **This Node** is connected to Port B or Port S of **Other Node**.

Rule 2: Port A of **This Node** accepts connection to Port B of **Other Node** if Port B of **This Node** is not connected, or if Port B of **This Node** is connected to Port A or Port S of **Other Node**.

Rule 3: Port A of **This Node** accepts the connection to Port M of **Other Node** if Port B of **This Node** is not connected, or if Port B of **This Node** is connected to Port A or Port S of **Other Node**.

Note: For further information regarding FDDI connection rules, refer to the FDDI System Level Description or the FDDI Network Configuration Guidelines.

Ordering Information

All models include installation instructions. The -AC and -BC models include a U.S. power cord. The -AD and -BD models require power cord kits for geographies outside the U.S.

Order the DECconcentrator 500 by components; this à la carte method allows flexibility in selecting only those options needed for your application. Depending on the specific configurations required, order boxes and modules with separate part numbers, as shown in the Order Codes table.

Note: It is very important that the ordering guidelines are strictly followed

DECconcentrator 500 Ordering Guidelines

Depending on the network configuration in which the DECconcentrator 500 is to be used, different options from the Order Codes table should be ordered. There are three available slots in the DECconcentrator 500 box (DEFCN-Ax/-Bx) that can be occupied by a combination of A/B* and port modules, as described in the following ordering guidelines. There can be a maximum of one A/B module installed in each box and it is installed in the top slot. The remaining open slots may be occupied by any combination of port modules (fiber or copper). All three slots may be occupied by any combination of port modules (fiber or copper) for a standalone configuration appropriate to the workgroup environment.

*__Note__: When A/B module is present, in-band network management is supported.

DECconcentrator 500 Ordering Guidelines – What to Order

The DEFCN-Ax/-Bx is required to house the A/B and/or port modules. For a description of the DECconcentrator 500 box options, please refer to the DECconcentrator 500 Order Codes table.

The following ordering guidelines will assist you in determining the appropriate DECconcentrator 500 modules to suit your FDDI network.

- If connection to the dual ring or a tree configuration is needed, select one of the following 2-port A/B* modules for the top slot:
  - Multimode fiber (MMF) DEFCN-MB/-MH
  - Single-mode fiber (SMF) DEFCN-EA/-EF
  - MMF (A)/SMF (B) DEFCN-DA/-DF
  - SMF (A)/MMF (B) DEFCN-CA/-CF
- If four or fewer fiber device ports are needed, select one of the following modules:
  - 4-port ANSI MMF DEFCN-NA/-NF
  - 4-port low-power optics MMF DEFCN-LA/-LF
  - 2 MMF ports/2 SMF ports (a 4-port module) DEFCN-FA/-FF
  - One of the A/B modules from the first list of selections, serving as a port module (see above).
- If five to eight fiber device ports are needed, select two of the following modules (any combination permitted):
  - 4-port ANSI MMF DEFCN-NA/-NF
  - 4-port low-power optics MMF DEFCN-LA/-LF
  - 2 MMF ports/2 SMF ports (a 4-port module) DEFCN-FA/-FF
  - One of the A/B modules from the first list of selections, serving as a port module (see above).
- If nine to twelve fiber device ports are needed, select three** of the following modules (any combination permitted):
  - 4-port ANSI MMF DEFCN-NA/-NF
  - 4-port low-power optics MMF DEFCN-LA/-LF
  - 2 MMF ports/2 SMF ports (a 4-port module) DEFCN-FA/-FF
  - One of the A/B modules from the first list of selections, serving as a port module (see above).
- If six or fewer copper ports are needed, select one of the following modules:
  - 6-port shielded twisted-pair (STP) DEFCN-SA/-SF
  - 6-port ThinWire (TW) DEFCN-TA/-TF

*__Note__: Modules may also be used as port modules to connect fiber-based devices; they are installed in slot 1.

**__Note__: Occupying all three slots with port modules does not provide dual ring/treed configurations or in-band network management. If this functionality is important given the number of device port connections needed, order a second DEFCN-Ax/Bx and the appropriate modules.

- If 7 – 12 copper ports are needed, select two of the following modules (any combination permitted):
  - 6-port STP DEFCN-SA/-SF
  - 6-port TW DEFCN-TA/-TF
- If 13 – 18 copper ports are needed (where the concentrator is used in a standalone configuration), select three* of the following modules (any combination permitted):
  - 6-port STP DEFCN-SA/-SF
  - 6-port TW DEFCN-TA/-TF

*__Note__: Occupying all three slots with port modules does not provide dual ring/treed configurations or in-band network management. If this functionality is important given the number of device port connections needed, order a second DEFCN-Ax/Bx and the appropriate modules.

Examples

Example 1:

If you want a rackmountable DECconcentrator 500 in the U.S. that connects to the dual ring via a single-mode fiber (Port A) and multimode fiber (Port B), six multimode fiber device ports and two single-mode fiber device ports, and you want to install the modules yourself, order the following:

One – DEFCN-AC
One – DEFCN-CF
One – DEFCN-NF
One – DEFCN-FF

Example 2:

If you want an outside the U.S. desktop DECconcentrator 500 that connects to a multimode dual ring and interconnects 16 shielded twisted-pair workstations (factory-installed), order the following:

Two – DEFCN-BD
Two – DEFCN-MB
Three – DEFCN-SA

Note (for Hierarchical Configurations of Concentrators): When cascading two concentrators, the B- port of the DEFCN-Cx, -Dx, -Ex or -Mx installed in the lower-level concentrator is connected to one of the M- ports of the DEFCN-Fx, -Lx, or -Nx installed in the upper-level concentrator. (Connection compatibility is determined by the fiber type supported by the modules — refer to the DECconcentrator Order Codes for descriptions.) Therefore, you must at least order DEFCN-Cx, -Dx, -Ex, or -Mx for the lower-level concentrator. ▲ Refer to the FDDI Configuration Guidelines in Appendix A in this Guide for more information on the DECconcentrator ports.

Hardware and Software Prerequisites

The DECconcentrator 500 box (DEFCN-AC/-AD/-BC/-BD) includes an RS232 (25-pin D-sub) connector and V3.1 software microcode to support out-of-band management (OBM). A terminal or intelligent modem (SCHOLAR Plus, Hayes-compatible) is connected to the concentrator using:

For VT100/VT200 series terminals, SCHOLAR Plus modem (or equivalent):

- BC22R-xx cable with 25-pin connectors at each end, or
- BC16E-xx cable with passive adapters (H8575A) at each end of the cable

For VT300 or VT400 series terminals:

- BC16E-xx standard six-pin modular jack (MJ) connector cable with one passive adapter (H8575A)

SNMP sets and traps are also included in the new DECconcentrator box (DEFCN-AC/-AD/-BC/-BD). A Software Update Package is available for existing DECconcentrator 500 customers to downline load this feature. Refer to "DECconcentrator 500 Software Enhancements" in this section. Note that an A/B module must be present to implement inband management.

Optical Bypass support is available one of two ways:

- For existing customers: New ANSI multimode A/B (inband management) module (DEFCN-MB/-MH), V3.1 Software Update Package and an external Optical bypass Relay (OBR). See "DECconcentrator 500 Software Enhancements" for software ordering information.
- For new customers: DEFCN-MB/-MH, new DECconcentrator box (includes OBM, SNMP sets, and OBR software support), and an external OBR

Note: Digital does not sell or support the external OBR devices. OBR vendors with whom we have done some functional testing are AMP Inc. and DiCon Fiberoptics Inc. These vendors should be contacted directly for information pertaining to their optical bypass products. Refer to Appendix A for optical bypass configuration guidelines. ▲ For further information on any of Digital's hardware, software, or service products, contact your local Digital sales office.

DECconcentrator 500 Order Codes	
Option	**Order Code**
Concentrator Box	
Configurable FDDI Concentrator box with OBM, (3) horizontal open slots, U.S. power cord, and **without** plastic skins. For rackmount applications. (Supersedes DEFCN-AA)	DEFCN-AC
Configurable FDDI Concentrator box with OBM, (3) horizontal open slots, and **without** U.S. power cord and plastic skins. For rackmount applications. (Supersedes DEFCN-AB)	DEFCN-AD
Configurable FDDI Concentrator box with OBM, (3) horizontal open slots, U.S. power cord and plastic skins. For table top applications. (Supersedes DEFCN-BA)	DEFCN-BC
Configurable FDDI Concentrator box with OBM, (3) horizontal open slots, plastic skins, and **without** power cord. For table top applications. (Supersedes DEFCN-BB)	DEFCN-BD
ANSI Multimode Network Management Cards (Dual Ring)	
DAS dual-ring connection module with inband management, OBR control. Factory installed. (Supersedes DEFCN-MA)	DEFCN-MB
DAS dual-ring connection module with inband management, OBR control. Field installed. (Supersedes DEFCN-MF)	DEFCN-MH
Single-Mode Fiber (SMF) Management Card Options (Dual Ring)	
DECconcentrator 500 SMF Management Card with an SMF transceiver on Port A and multimode transceiver on Port B (factory-installed).	DEFCN-CA
DECconcentrator 500 SMF Management Card with an SMF transceiver on Port A and multimode transceiver on Port B (field-installed).	DEFCN-CF
DECconcentrator 500 SMF Management Card with one multimode transceiver at Port A and one SMF transceiver at Port B (factory-installed).	DEFCN-DA
DECconcentrator 500 SMF Management Card with one multimode transceiver at Port A and one SMF transceiver at Port B (field-installed).	DEFCN-DF
DECconcentrator 500 SMF Management Card with SMF transceivers on both Port A and Port B (factory-installed).	DEFCN-EA
DECconcentrator 500 SMF Management Card with SMF transceivers on both Port A and Port B (field-installed).	DEFCN-EF

DECconcentrator 500 Order Codes (Continued)

Option	Order Code
FDDI Fiber-Based Port (Station) Cards	
DECconcentrator 500 low power optics port card with 4 ports, 1 km (0.6 mi), factory-installed in DEFCN-Ax or DEFCN-Bx box.	DEFCN-LA
DECconcentrator 500 low-power optics port card, field-installed, with 4 ports, 1 km (0.6 mi), field-installed in DEFCN-Ax or DEFCN-Bx box.	DEFCN-LF
FDDI 4-port module, factory-installed: port module with ANSI-compliant optics contains four ports (FDDI "M") to connect up to four FDDI devices. Supports up to 2 km (1.2 mi) of fiber link for each port. Factory-installed in DEFCN-Ax or DEFCN-Bx box.	DEFCN-NA
FDDI 4-port module, field-installed: same as DEFCN-NA except for field-installed in DEFCN-Ax or DEFCN-Bx box.	DEFCN-NF
DECconcentrator 500 SMF Port Card with 2 SMF transceivers and 2 multimode transceivers (factory-installed).	DEFCN-FA
DECconcentrator 500 SMF Port Card with 2 SMF transceivers and 2 multimode transceivers (field-installed).	DEFCN-FF
FDDI Copper-Based Port (Station) Cards	
STP, 6-port concentrator port card, 150-ohm Type 1, 2, or 6 (factory-installed).	DEFCN-SA
STP, 6-port concentrator port card, 150-ohm Type 1, 2, or 6 (field-installed).	DEFCN-SF
ThinWire, 6-port concentrator port card (high-grade coax, 50-ohm RG-58) (factory-installed).	DEFCN-TA
ThinWire, 6-port concentrator port card (high-grade coax, 50-ohm RG-58) (field-installed).	DEFCN-TF

DECconcentrator 500 Software Enhancements

For customers who were shipped DECconcentrator 500s prior to February 5, 1992, the following FDDI features and functionality may be easily added through a software update using Digital's downline-upgrade utility:

- SNMP "sets and traps" which provide additional network control in a multivendor network
- DECconcentrator 500 support for external optical bypass relay

The downline-upgrade utility allows the device's permanently resident firmware to be upgraded over the network with the latest product enhancements. (Customers purchasing DEFCN-AC/-AD/-BC/-BD do not require this software update as these software features are included.)

The DECconcentrator 500 Software Update Package, V3.1, is available for VMS, ULTRIX VAX, and ULTRIX RISC. In addition to the new features listed above, V3.1 includes SMT V6.2, dual homing, and support for ThinWire and STP FDDI products.

Hardware and Software Requirements

New Customers	
Feature	**Option**
SNMP	New DECconcentrator 500 box (DEFCN-AC/-AD/-BC/-BD)*
OBR	New box (DEFCN-AC/-AD/-BC/-BD)* *plus* New ANSI multimode A/B module (DEFCN-MB/-MH) *plus* third-party optical bypass relay
*Also includes out-of-band management	

Existing Customers	
Feature	**Option**
SNMP	DECconcentrator 500 V3.1 Software Update Package
OBR	New ANSI multimode A/B module (DEFCN-MB/-MH) *plus* DECconcentrator 500 V3.1 Software Update Package *plus* third-party optical bypass relay

▲ For more information on the DECconcentrator 500's support for SNMP and optical bypass, and out-of-band management functionality, please refer to the previous section of this Guide, entitled "DECconcentrator 500."

Each of the packages in the following table contains the FDDI device-specific software and documentation along with the downline-load utility license, media and documentation.

DECconcentrator 500 Order Codes for Update Services and Upgrade Packages	
Option	**Order Code**
Update Services	
FDDI DECconcentrator 500 Software Subscription Service for VMS, 16MT9	QY-YX2AA-AM
FDDI DECconcentrator 500 Software Subscription Service for VMS, TK50	QY-YX2AB-A5
FDDI DECconcentrator 500 Software Subscription Service for ULTRIX VAX, 16MT9	QY-YX2AC-AM
FDDI DECconcentrator 500 Software Subscription Service for ULTRIX VAX, TK50	QY-YX2AD-A5
FDDI DECconcentrator 500 Software Subscription Service ULTRIX RISC, 16MT9	QY-YX2AE-AM
FDDI DECconcentrator 500 Software Subscription Service ULTRIX RISC, TK50	QY-YX2AF-A5
FDDI DECconcentrator Annual Subscription without Media	QX-YX2AA-RA
Upgrade Packages	
FDDI DECconcentrator 500 Software Upgrade Package for VMS, 16MT9	QB-YX2A9-AA
FDDI DECconcentrator 500 Software Upgrade Package for VMS, TK50	QB-YX2A9-AB
FDDI DECconcentrator 500 Software Upgrade Package for ULTRIX VAX, 16MT9	QB-YX2A9-AC
FDDI DECconcentrator 500 Software Upgrade Package for ULTRIX VAX, TK50	QB-YX2A9-AD
FDDI DECconcentrator 500 Software Upgrade Package for ULTRIX RISC, 16MT9	QB-YX2A8-AE
FDDI DECconcentrator 500 Software Upgrade Package for ULTRIX RISC, TK50	QB-YX2A8-AF
FDDI DECconcentrator 500 Software Microcode Update License	QB-YLZAA-RA
Note: A DEFCN-M* (ANSI multimode A/B module) is required for upgrading the DECconcentrator 500 microcode.	

DECconcentrator 500 Order Codes for Power Cords and Literature	
Option	**Order Code**
Power Cords	
Country Kits	BN20*-2E
Literature	
Digital's FDDI DECconcentrator Family, Dependable and Flexible Network Connectivity	EC-F1421-42

* Replace the * with one of the following codes: A (United States, Canada, — included with DEFCN-AA/-AC/-BA/-BC), B (Japan), C (Australia, New Zealand), D (Belgium, Finland, France, Germany, Holland, Norway, Spain, Sweden), E (United Kingdom, Ireland), F (Switzerland), H (Denmark), J (Italy), K (India, S. Africa), L (Israel)

Fiber Optic Patch Cords

The patch cords listed below provide the interconnection between the DECconcentrator 500, FDDI "S"-port stations (such as the DEC FDDIcontroller 400 and 700), and patch panels. ▲ For further information on fiber optic cable plant design and methodologies, refer to *The DECconnect System Fiber Optic Planning and Configuration* guide (EK-DECSY-FP). For complete fiber optic product options, refer to Section 2, "OPEN DECconnect System Fiber Optic Network."

▲ For additional FDDI cabling parts (single-mode and copper), refer to Appendix A in this Guide, "Network Configuration Guidelines."

Fiber Optic Patch Cord Ordering Codes

Description	Length	Quantity	Part Number
Cable assembly, fiber optics, FDDI-to-FDDI, Flip (refer to Figure 1)	1 m (3.28 ft)	1	BN24B-01
Cable assembly	3 m (9.8 ft)	1	BN24B-03
Cable assembly	4.5 m (14.7 ft)	1	BN24B-4E
Cable assembly	10 m (32.8 ft)	1	BN24B-10
Cable assembly	20 m (65.6 ft)	1	BN24B-20
Cable assembly	30 m (98.4 ft)	1	BN24B-30
Cable assembly, fiber optics, FDDI-to-2.5 mm bayonet connector (refer to Figure 2)	1 m (3.28 ft)	1	BN24D-01
Cable assembly	3 m (9.8 ft)	1	BN24D-03
Cable assembly	4.5 m (14.7 ft)	1	BN24D-4E
Cable assembly	10 m (32.8 ft)	1	BN24D-10
Cable assembly	20 m (65.6 ft)	1	BN24D-20
Cable assembly	30 m (98.4 ft)	1	BN24D-30
Cable assembly, fiber optics, 2.5 mm-to-2.5 mm bayonet connector (refer to Figure 3)	1 m (3.28 ft)	1	BN24E-01
Cable assembly	3 m (9.8 ft)	1	BN24E-03
Cable assembly	4.5 m (14.7 ft)	1	BN24E-4E
Cable assembly	10 m (32.8 ft)	1	BN24E-10
Cable assembly	20 m (65.6 ft)	1	BN24E-20
Cable assembly	30 m (98.4 ft)	1	BN24E-30

Figure 1 – Cable Assembly, Fiber Optics, FDDI-to-FDDI (BN24B-xx)

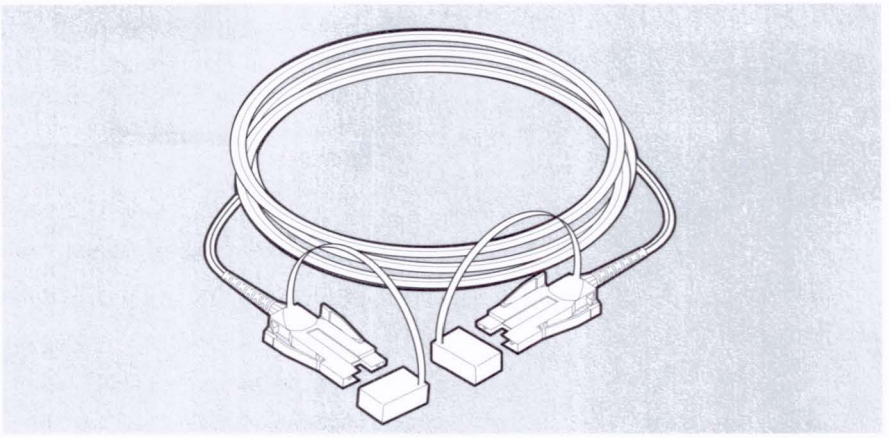

TBG–056–00

Figure 2 – Cable Assembly, Fiber Optics, FDDI-to-2.5 mm Bayonet ST-Connector (BN24D-xx)

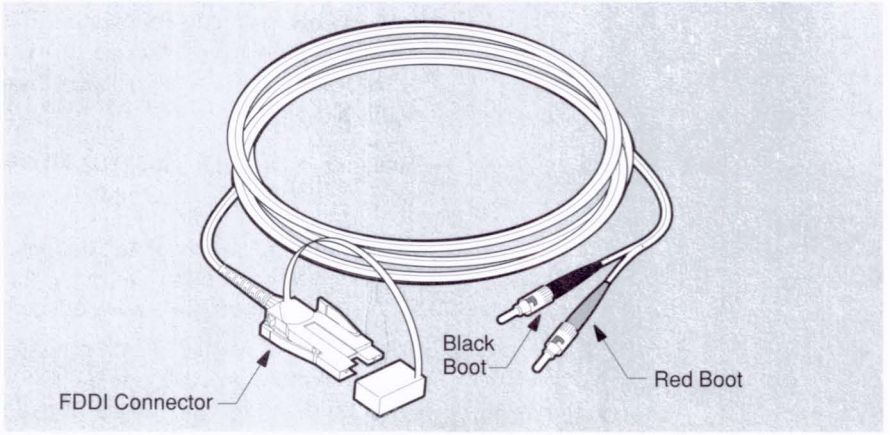

TBG-057-00

Figure 3 – Cable Assembly, Fiber Optics, 2.5 mm Bayonet-ST-to-2.5 mm Bayonet ST-Connector (BN24E-xx)

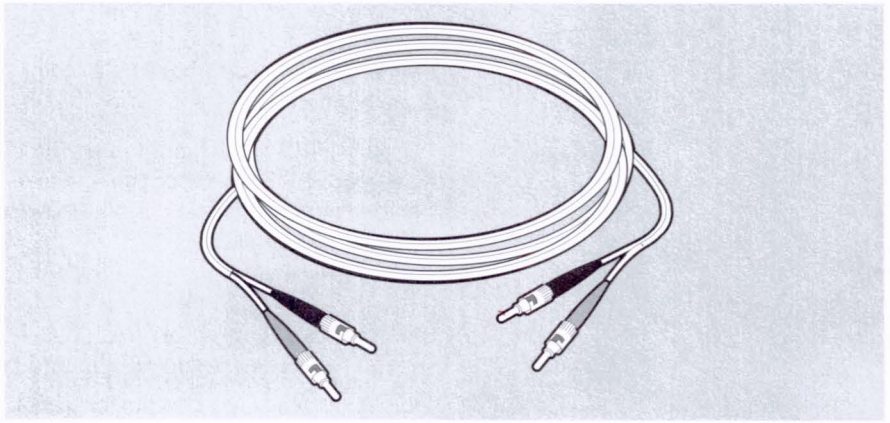

TBG-153-00

DECbridge 5xx
DECbridge 6xx



The DECbridge 500 and 600 series, a product of Digital's extensive experience in network bridge technology, are standards-compliant LAN devices that provide the interconnection between a high-speed FDDI network backbone and one or more 802.3/Ethernet LANs. In addition to standard bridge functions such as automatic filtering and forwarding, the DECbridge family performs high-speed, transparent translation of network data packets between the FDDI and 802.3/Ethernet frame formats. Translation enables interoperability between FDDI and 802.3/Ethernet networks, thus assuring investment protection.

The DECbridge family includes two product lines to suit diverse LAN topologies:

- DECbridge 500 series — FDDI to one 802.3/Ethernet LAN
- DECbridge 600 series — FDDI to three 802.3/Ethernet LANs

The DECbridge 600 series includes the DECbridge 600 model that connects three 802.3/Ethernet LANs and is upgradeable to FDDI.

Because the DECbridge products are protocol-independent, they are transparent to all network protocols running on FDDI and 802.3/Ethernet LANs. The DECbridge products operate transparently for "plug-and-play" network operation. For users who prefer more network control, the DECbridge products include settable filtering choices.

Compared to Digital's initial 802.3/Ethernet-to-FDDI bridge, the DECbridge 500 model, the DECbridge 500 and 600 series offer the following new functionality:

- Dual attachment station (DAS) options, providing direct attachment of DECbridge 52x and 62x products to the FDDI LAN without requiring the DECconcentrator 500 or equivalent concentrator.
- Simple Network Management Protocol (SNMP) agent enables a network manager to monitor, configure, and control any DECbridge 51x/52x/6xx series or DECconcentrator 500 device from any vendor's SNMP management station.
- Specialized translation for the AppleTalk protocol, providing transparent communication between 802.3/Ethernet and FDDI networks.
- Dual homing support, providing fault tolerance in treed topologies.
- External optical bypass device support, allowing network bypass of a failed device.
- Single-mode optical fiber FDDI options, significantly extending achievable distances between FDDI stations.

With the DECbridge family of products and other Digital FDDI solutions, high-speed FDDI networks complement existing 802.3/Ethernet LANs. Customers can maintain current networks, adding FDDI wherever high-performance is required.

Features

- Uses standards-compliant (IEEE 802.1d, 802.2, 802.3, and ANSI FDDI) technology for interoperability in multivendor networks.
- Implemented as dual attachment station (DAS) or single attachment station (SAS) connection to the FDDI LAN, providing configuration flexibility.

- Includes a Simple Network Management Protocol (SNMP) agent, enabling a network manager to monitor, configure, and control any DECbridge 51x/52x/6xx series or DECconcentrator 500 device from any vendor's SNMP management station.
- Performs bidirectional standards-based translation that also accommodates specialized translation for the AppleTalk protocol and Kinetics devices, for example.
- Includes ANSI-compliant multimode and/or single-mode optical fiber FDDI options, allowing up to 40 km (25 miles) distances between FDDI stations.
- Supports dual-homed configurations, providing redundant device connections (DAS versions).
- Supports external optical bypass device, allowing network bypass of a failed device when multimode fiber is used.
- Includes downline-load upgrade capability, facilitating the addition of new features and functionality (such as the evolving FDDI SMT standard) to the DECbridge firmware.
- Performs fragmentation of FDDI IP (TCP, UDP, ICMP, and EGP) data packets, per RFC 791, allowing transparent forwarding of these large FDDI IP packets to 802.3/Ethernet subnetworks.
- Performs spanning tree loop detection in both the IEEE 802.1d and Digital's LAN Bridge implementation modes; automatically configures to 802.1d implementation for standards-compliancy and Digital's LAN Bridge spanning tree implementation for backwards compatibility with the installed base of Digital's LAN Bridge users; is switch-selectable to 802.1d-only mode using management software.
- Provides flexible filtering (destination/source address, protocol) for greater network control, increased security and bandwidth utilization, and reduced propagation of network problems*.
- Provides ability to selectively apply address and/or protocol filters to specific groups of ports* (DECbridge 600 series).
- Provides ANSI SMT station management capabilities, allowing the bridges to participate and work cooperatively within the FDDI LAN and ensures proper station operation.
- Supports the "disabling of learning" function, providing additional network control and security*.
- Provides password protection of management access using management software, limiting unauthorized access to bridge parameters*.
- Includes the Digital-developed high-performance FDDI chipset which has been licensed to major semiconductor firms.
- Returns 802.3/Ethernet network utilization statistics while the bridge is actively filtering and forwarding traffic*.
- Includes 3-port 802.3/Ethernet bridge (no FDDI interface) that is upgradeable to FDDI (DECbridge 600 model).
- Configured as an SAS, the DECbridge devices connected to a concentrator allow for nondisruptive addition/removal of bridges.

*Requires network management software to access this function.

Network Management Capabilities

Digital's DECmcc based management software significantly enhances operation of the DECbridge products by enabling a network manager to configure, monitor, control, or troubleshoot these devices from a single station, and to implement many important bridge functions. It allows a network manager to:

- Remotely monitor bridge performance
- Modify bridge parameters
- Implement settable filtering options, password protection, and display 802.3/Ethernet network utilization statistics

In addition to providing network management capability based on Digital's RBMS protocol, the DECbridge 500 and 600 series include network management based on SNMP. The SNMP-based management supports MIB II, Bridge MIB, FDDI MIB, and Digital Equipment Corporation's vendor MIB that includes extensions to the others. These MIBs are publicly available.

The DECbridge family of products fully supports ANSI SMT network management capabilities. ▲ For further information on management software, refer to Section 8 of this guide.

Specifications	
Spanning Tree Implementation	IEEE 802.1d and LAN Bridge 100
Physical Characteristics	
Height	17.7 cm (6.96 in)
Width	44.2 cm (17.4 in)
Depth	36.5 cm (14.4 in)
Weight	14.5 kg (32 lbs)
Installation Options	Table top or rackmount (using SER rack or EIA standard 19-inch open rack, and mounting hardware provided)
Power Requirements	
Input voltage range	88 to 264 Vac
Frequency tolerance	47 to 63 Hz
Maximum ac watts drawn	390 W
Maximum heat dissipation	1,330 Btu/hr
Operating Environment	
Temperature	5° C to 50° C (41° F to 122° F)
Relative humidity	10% to 95% (noncondensing)

Power Budget and Distance Specifications by Fiber Type

Fiber Type (diameter in microns)	Power Budget (dB loss budget)	Interstation Distance (in kilometers)[1]
Multimode types:		
50/125	6 dB	2.0 km[2]
62.5/125	11 dB	2.0 km[2]
85/125	11 dB	1.6 km[2]
100/140	11 dB	1.6 km[2]
Single-mode types:		
8–10/125	22 dB[3]	40 km[4]
DEFCN-Lx in DECconcentrator 500		
Multimode types:		
50/125	3 to 5 dB[5]	1.0 km (if loss budget is met)[2]
62.5/125	7 dB	1.0 km[2]

[1] With no more than 4×10^{-11} bit error rate

[2] Fiber optic cable must meet modal bandwidth and chromatic dispersion requirements as specified by the ANSI FDDI standard.

[3] The minimum required loss is 12 dB.

[4] Fiber is standard telecommunications-grade dispersion unshifted EIA/TIA for 92BAAA.

[5] The 50 micron fiber loss budget is very dependent on the quality and numerical aperture (NA) of the fiber.

Performance Considerations

To maximize the high throughput and interoperability of the DECbridge family between FDDI and 802.3/Ethernet networks, two performance characteristics must be evaluated: filtering and forwarding rate.

The key performance characteristics of the DECbridge 500 and 600 series are determined by the following parameters:

- The filtering rate is the speed at which the bridge processes received packets to determine whether they are to be forwarded across the bridge. A high filtering rate keeps the bridge from clogging with data packets that are not being forwarded. Efficient filtering reduces the probability of missing a packet to be forwarded, which would result in a lost packet.
- The forwarding rate is based on the number of data packets that can be transferred to and from the FDDI and 802.3/Ethernet networks. It should be large enough to allow a high volume of traffic between the FDDI LAN and other networks. The forwarding rate is determined by the speed of the bridge in parsing a packet, verifying the destination address by checking its forwarding database, and determining whether or not to forward the packet.

Performance Characteristics	
Filtering Rate	
DECbridge 500 series	460,000
DECbridge 600 series	480,000
Forwarding Rate	
DECbridge 500 series	14,880
DECbridge 600 series	20,000

Prerequisite Hardware

The SAS-based DECbridge 51x/61x products require the DECconcentrator 500 or an equivalent concentrator for connection to the FDDI network. The DAS-based DECbridge 52x/62x products connect either directly to the dual ring or to a concentrator.

Optional Software

While no software is required to operate the DECbridge products, DECmcc Extended LAN Manager is needed to take advantage of many of the features available in these devices. Examples include: settable filtering options, password protection, and display of 802.3/Ethernet network utilization statistics. SNMP-based network management systems including DECmcc Management Station for ULTRIX, may be used to observe the devices. ▲ For further information on management software, refer to Section 8 of this guide.

Ordering Information

All models include installation instructions. Note that the U.S. versions include a power cord. The outside U.S. versions require a power cord. The DECbridge products use the same power cord kit as the LAN Bridge 200. The power cords are listed in the *"DECbridge 500/600 Series Order Codes"* tables. ▲ Refer to Appendix A in this guide for configuration, distance, and cabling information.

DECbridge 500 Series

- Features one FDDI LAN connection using either single-mode fiber and/or multimode fiber, and one IEEE 802.3/Ethernet LAN connection that is switch-selectable between ThinWire (BNC) and thick wire-accessible (AUI) connection.
- Includes DECbridge 51x models that are SAS-based and require a DECconcentrator 500 or equivalent concentrator for connection to FDDI, and DECbridge 52x models that are DAS-based and connect either directly to the dual ring or to a concentrator.
- Is upgradeable to three 802.3/Ethernet LAN connections.

Note: The DECbridge 500 model (DEFEB-AA) is no longer orderable. Current DECbridge 500 model owners are encouraged to upgrade to the new DECbridge 510 model, which provides a new applications processor with additional memory and new software that supports the new features. See the upgrade chart for part number information.

Selecting DECbridge 500 Series Options

	510	518	520	524	526	528
Number of 802.3/Ethernet Ports	1	1	1	1	1	1
Number of FDDI Ports	1	1	1	1	1	1
SAS	•	•				
MMF	•					
SMF		•				
DAS			•	•	•	•
MMF						
Port A			•		•	
Port B			•	•		
SMF						
Port A				•		•
Port B					•	•

MMF=Multimode fiber, SMF=Single-mode fiber

DECbridge 500 Series Order Codes

Option	Order Code
DECbridge 510, SAS, multimode FDDI optics, U.S.	DEFEB-AC
DECbridge 510, SAS, multimode FDDI optics, outside U.S.	DEFEB-AD
DECbridge 518, SAS, single-mode FDDI optics, U.S.	DEFEB-AS
DECbridge 518, SAS, single-mode FDDI optics, outside U.S.	DEFEB-AT
DECbridge 520, DAS, multimode FDDI optics, U.S.	DEFEB-DA
DECbridge 520, DAS, multimode FDDI optics, outside U.S.	DEFEB-DB
DECbridge 524, DAS, single-mode FDDI optics Port A, multimode FDDI optics Port B, U.S.	DEFEB-DM
DECbridge 524, DAS, single-mode FDDI optics Port A, multimode FDDI optics Port B, outside U.S.	DEFEB-DN
DECbridge 526, DAS, multimode FDDI optics Port A, single-mode FDDI optics Port B, U.S.	DEFEB-DP
DECbridge 526, DAS, multimode FDDI optics Port A, single-mode FDDI optics Port B, outside U.S.	DEFEB-DQ
DECbridge 528, DAS, single-mode FDDI optics Port A and B, U.S.	DEFEB-DS
DECbridge 528, DAS, single-mode FDDI optics Port A and B, outside U.S.	DEFEB-DT

Note: All U.S. models ship with power cords.

DECbridge 600 Series

- Features one FDDI LAN connection using either single-mode fiber and/or multimode fiber, and three 802.3/Ethernet LAN thick wire-accessible (AUI) connections.
- Includes DECbridge 61x models that are SAS-based and require a concentrator for connection to FDDI, and DECbridge 62x models that are DAS-based and connect either directly to the dual ring or to a concentrator.

Selecting DECbridge 600 Series Options

	600	**610**	**618**	**620**	**624**	**626**	**628**
Number of 802.3/Ethernet Ports	3	3	3	3	3	3	3
Number of FDDI Ports	0	1	1	1	1	1	1
SAS		•	•				
MMF		•					
SMF			•				
DAS				•	•	•	•
MMF							
Port A				•		•	
Port B				•	•		
SMF							
Port A					•		•
Port B						•	•

MMF=Multimode fiber, SMF=Single-mode fiber

DECbridge 600 Series Order Codes

Option	Order Code
DECbridge 600, 3-port 802.3/Ethernet LAN bridge, U.S.	DEFEB-NC
DECbridge 600, 3-port 802.3/Ethernet LAN bridge, outside U.S.	DEFEB-ND
DECbridge 610, SAS, multimode FDDI optics, U.S.	DEFEB-TA
DECbridge 610, SAS, multimode FDDI optics, outside U.S.	DEFEB-TB
DECbridge 618, SAS, single-mode FDDI optics, U.S.	DEFEB-TS
DECbridge 618, SAS, single-mode FDDI optics, outside U.S.	DEFEB-TT
DECbridge 620, DAS, multimode FDDI optics, U.S.	DEFEB-LA
DECbridge 620, DAS, multimode FDDI optics, outside U.S.	DEFEB-LB
DECbridge 624, DAS, single-mode FDDI optics Port A, multimode FDDI optics Port B, U.S.	DEFEB-LM
DECbridge 624, DAS, single-mode FDDI optics Port A, multimode FDDI optics Port B, outside U.S.	DEFEB-LN
DECbridge 626, DAS, multimode FDDI optics Port A, single-mode FDDI optics Port B, U.S.	DEFEB-LP
DECbridge 626, DAS, multimode FDDI optics Port A, single-mode FDDI optics Port B, outside U.S.	DEFEB-LQ
DECbridge 628, DAS, single-mode FDDI optics Port A and B, U.S.	DEFEB-LS
DECbridge 628, DAS, single-mode FDDI optics Port A and B, outside U.S.	DEFEB-LT

Note: All U.S. models ship with power cords.

DECbridge 500 Series and 600 Series Update Service Order Codes

Option	Order Code
DECbridge 500/600 Software Subscription Service for VMS, 16MT9	QY-MF8AA-AM
DECbridge 500/600 Software Subscription Service for VMS, TK50	QY-MF8AB-A5
DECbridge 500/600 Software Subscription Service for ULTRIX VAX, 16MT9	QY-MF8AC-AM
DECbridge 500/600 Software Subscription Service for ULTRIX VAX, TK50	QY-MF8AD-A5
DECbridge 500/600 Software Subscription Service for ULTRIX RISC, 16MT9	QY-MF8AE-AM
DECbridge 500/600 Software Subscription Service for ULTRIX RISC, TK50	QY-MF8AF-A5
DECbridge 500/600 Annual Subscription without Media	QX-MF8AA-RA

DECbridge 500 and 600 Series Software Upgrade Package Order Codes	
Option	**Order Code**
FDDI DECbridge 500/600 Software Upgrade Package for VMS, 16MT9	QB-MF8A9-AA
FDDI DECbridge 500/600 Software Upgrade Package for VMS, TK50	QB-MF8A9-AB
FDDI DECbridge 500/600 Software Upgrade Package for ULTRIX VAX, 16MT9	QB-MF8A9-AC
FDDI DECbridge 500/600 Software Upgrade Package for ULTRIX VAX, TK50	QB-MF8A9-AD
FDDI DECbridge 500/600 Software Upgrade Package for ULTRIX RISC, 16MT9	QB-MF8A8-AE
FDDI DECbridge 500/600 Software Upgrade Package for ULTRIX RISC, TK50	QB-MF8A8-AF
FDDI DECbridge 500/600 Software Microcode Update License	QL-MF5AA-RA

DECbridge 500/600 Series Power Cord Order Codes	
Option	**Order Code**
Country Kits	BN20*-2E
Literature	
The DECbridge 500 and 600 Series, Digital's Comprehensive Family of Network Interconnect Products	EC-F1256-42

* Replace the * with one of the following codes: A (United States, Canada, — included with the DEFEB-xx U.S. models only), B (Japan), C (Australia, New Zealand), D (Belgium, Finland, France, Germany, Holland, Norway, Spain, Sweden), E (United Kingdom, Ireland), F (Switzerland), H (Denmark), J (Italy), K (India, S. Africa), L (Israel)

DECbridge 500 Software Enhancements

Digital added software features and functionality to all of the current FDDI products via a software upgrade to the device's permanently resident software. This additional functionality has been shipping since July, 1991. Only customers with DECbridge 500s that were shipped prior to June 28, 1991 will require the V3.0 software to receive the added features and functionality.

V3.0 Features

- Simple Network Management Protocol (SNMP) agent — Enables observation of DECbridge 500 management counters in a multivendor LAN environment.
- Specialized translation — Accommodates the AppleTalk protocol and Kinetics devices, for example, for transparent 802.3/Ethernet and FDDI communication.
- SMT V6.2.
- FDDI source address filtering.
- Ability to disable automatic destination address learning.
- Ring mapping capability.

DECbridge 500 Update Service Order Codes

Option	Order Code
DECbridge 500 Software Subscription Service for VMS, 16MT9	QY-YX3AA-AM
DECbridge 500 Software Subscription Service for VMS, TK50	QY-YX3AB-A5
DECbridge 500 Software Subscription Service for ULTRIX VAX, 16MT9	QY-YX3AC-AM
DECbridge 500 Software Subscription Service for ULTRIX VAX, TK50	QY-YX3AD-A5
DECbridge 500 Software Subscription Service for ULTRIX RISC, 16MT9	QY-YX3AE-AM
DECbridge 500 Software Subscription Service for ULTRIX RISC, TK50	QY-YX3AF-A5
DECbridge Annual Subscription without Media	QX-YX3AA-RA

DECbridge 500 Software Upgrade Package Order Codes	
Option	**Order Code**
FDDI DECbridge 500 Software Upgrade Package for VMS, 16MT9	QB-YX3A9-AA
FDDI DECbridge 500 Software Upgrade Package for VMS, TK50	QB-YX3A9-AB
FDDI DECbridge 500 Software Upgrade Package for ULTRIX VAX, 16MT9	QB-YX3A9-AC
FDDI DECbridge 500 Software Upgrade Package for ULTRIX VAX, TK50	QB-YX3A9-AD
FDDI DECbridge 500 Software Upgrade Package for ULTRIX RISC, 16MT9	QB-YX3A8-AE
FDDI DECbridge 500 Software Upgrade Package for ULTRIX RISC, TK50	QB-YX3A8-AF
FDDI DECbridge 500 Software Microcode Update License	QL-YLYAA-RA

DECbridge Family Hardware Upgrades

Customers with DECbridge 500 devices can upgrade their existing equipment to accommodate:

- An increase in the number of 802.3/Ethernet LANs requiring connection to an FDDI backbone.
- Direct connection to the FDDI dual ring as a DAS device.

The following two hardware upgrade packages are available:

- DECbridge Upgrade Kit #1 — enables a user to convert a DECbridge 500 to a single-box solution that connects three 802.3/Ethernet LANs with an FDDI LAN. The upgrade includes: Application Processor module, 3-port 802.3/Ethernet interface module, documentation kit, and loopback connectors.
- DECbridge Upgrade Kit #2 — converts any single attachment station (SAS) DECbridge to a DAS DECbridge, accommodating topology changes in the user's FDDI network. The upgrade includes: DAS-based FDDI interface module, documentation kit, and loopback connectors.

Note: Upgrade Kit #2 does not include an Application Processor module. Refer to the *"DECbridge Family Upgrade Alternatives"* table to determine if this module must also be ordered to upgrade to a DAS-based DECbridge.

Also available are ANSI-compliant, single-mode optical fiber options that support distances up to 40 km (25 miles) enabling you to extend the interstation distance beyond the 2 km (1.2 miles) supported by multimode fiber.

DECbridge Hardware Upgrade Order Codes

Option	Order Code
DECbridge Upgrade Kit #1	DEFEB-UG
DECbridge Upgrade Kit #2	DEFEB-UP
Universal DECbridge upgrade documentation kit	DEFEB-DK
Application Processor "AP2" module	54-19375-02
3-port 802.3/Ethernet module	54-19409-01
FDDI module, SAS, multimode optics	54-19369-01
FDDI module, SAS, single-mode optics	54-19369-03
FDDI module, DAS, multimode optics Port A, single-mode Port B	54-19369-04
FDDI module, DAS, single-mode optics Port A, multimode Port B	54-19369-05
FDDI module, DAS, single-mode optics Port A and B	54-19369-06
NI AUI loopback connector	12-22196-01
FI Multimode loopback connector	12-32005-01
FI Single-mode loopback connector	12-34830-01

Note: You need to order a documentation kit and loopback connectors with the 54-class upgrades.

DECbridge Family Upgrade Alternatives

UPGRADE TO[1] \ UPGRADE FROM	500	510	518	520	524	526	528	600	610	618	620	624	626	628
510	C	*	E	*	*	*	E	*	*	*	*	*	*	*
518	C,G	G	*	G	*	*	*	*	*	*	*	*	*	*
520	B,C	B	B	*	B	B	B	*	*	*	*	*	*	*
524	C,H	H	H	H	*	H	H	*	*	*	*	*	*	*
526	C,J	J	J	J	J	*	J	*	*	*	*	*	*	*
528	C,K	K	K	K	K	K	*	*	*	*	*	*	*	*
600	*	*	*	*	*	*	*	*	*	*	*	*	*	*
610	A	D	D,E	*	*	*	D,E	E	*	E	*	*	*	E
618	A,G	D,G	D	D,G	*	*	*	G	G	*	G	*	*	*
620	A,B	B,D	B,D	D	B,D	B,D	B,D	B[4]	B	B	*	B	B	B
624	A,H	B,H	B,H	B,H	D	D,H	D,H	H	H	H	H	*	H	H
626	A,J	D,J	D,J	D,J	D,J	D	D,J	J	J	J	J	J	*	J
628	A,K	D,K	D,K	D,K	D,K	D,K	D	K	K	K	K	K	K	*

Legend:

A = Requires upgrade kit DEFEB-UG[2]

B = Requires upgrade kit DEFEB-UP[2]

C = Requires AP2 module (P/N 54-19375-02)[3]

D = Requires NI(3) module (P/N 54-19409-01)[3]

E = Requires FI SAS multimode module (P/N 54-19369-01)[3]

G = Requires FI SAS single-mode module (P/N 54-19369-03)[3]

H = Requires FI DAS multimode Port 1(A)/single-mode Port 1(B) (P/N 54-19369-04)[3]

J = Requires FI DAS single-mode Port 1(A)/multimode Port 1(B) (P/N 54-19369-05)[3]

K = Requires FI DAS single-mode for Ports 1(A) and 1(B) (P/N 54-19369-06)[3]

* = Not recommended

[1] Consider ordering management software for the VMS or ULTRIX operating system when ordering upgrade kits or modules.

[2] Includes documentation kit and test connectors

[3] You need to order a documentation kit and loopback connectors with this module.

[4] You need to order an additional multimode loopback for this upgrade.

Note: Any DECbridge upgrade will require the current service agreement in place to be modified to identify the new model in order to ensure non-interrupted service. Also, the DECbridge upgrades are not customer installable. Contact your local service representative for assistance.

Prerequisite Hardware

The DECbridge 500 product can be upgraded to a DAS device (DECbridge 52x) by ordering Upgrade Kit #2 (DEFEB-UP) and a new applications processor module (order number 54-19375-02).

Note: DECbridge 500 users who are purchasing the multiport Upgrade Kit #1 (DEFEB-UG) and Upgrade Kit #2 (DEFEB-UP) do not need to order the separate application processor module.

Unlike the SAS-based DECbridge products, DAS-based DECbridges do not require a concentrator for attachment to the FDDI LAN.

Optional Software

DECmcc Extended LAN Manager is used to manage, monitor, and control the upgraded devices. DECelms does not support these upgrades.

SNMP-based network management systems, including DECmcc Management Station for ULTRIX, may be used to monitor the upgraded devices. ▲ For further information on any of Digital's hardware, software, or service products, contact your local Digital sales office.

Digital has integrated FDDI network management into its EMA-compliant DECmcc Director family of products, which already provide a full complement of network management capabilities for both local and wide area networks. This commitment to provide customers with a single enterprise network management system is reinforced with the availability of DECmcc Extended LAN Manager software.

DECmcc Extended LAN Manager V1.2 software is comprised of DECmcc modules that provide network management support for LAN bridges, DECbridges, and DECconcentrators. Users can manage all of their Digital FDDI and 802.3/Ethernet bridge products and DECconcentrator 500s from any of the following DECmcc configurations:

- DECmcc Director (license included with DECnet-VAX)
- DECmcc Basic Management System (BMS)
- DECmcc Site Management Station (SMS)
- DECmcc Enterprise Management Station (EMS)

Digital's FDDI and IEEE 802.3/Ethernet bridge products and the DECconcentrator 500 are self-operating and self-managing. The DECmcc Extended LAN Manager significantly enhances operations by enabling a network manager to configure, monitor, control, or troubleshoot these devices from a single station, and to implement many important bridge and concentrator functions.

For example, DECmcc Extended LAN Manager promotes security and control by supporting closed user groups and restricting subnetwork access through the use of settable destination/source address and protocol filtering in the DECbridge 500/600 series and the LAN Bridge 200. It also implements password protection which restricts access to the DECconcentrator 500, DECbridge 500/600 series, and LAN Bridge 150/200 products.

DECmcc Extended LAN Manager simplifies the network manager's job by providing extended FDDI, IEEE 802.3/Ethernet, and mixed LAN management with one product from a single location in the network.

The DECbridge family and DECconcentrator 500 devices include support for the industry-standard Simple Network Management Protocol (SNMP). By using DECmcc Management Station for ULTRIX, or third party SNMP-based network management systems, management counters in Digital's FDDI extended LAN devices can be observed. ▲ For more information on DECmcc Extended LAN Manager software and the entire DECmcc Director family of products, refer to Section 8, "Manageability: Management Products."

DEC FDDIcontroller/EISA (DEFEA)

Digital is announcing the newest member of its FDDI-based controller family, the DEC FDDIcontroller/EISA (DEFEA-AA). This option is a low cost, single attachment station. It includes an ANSI standard Media Interface Connector (MIC) that supports multimode fiber connection to an ANSI-compliant FDDI concentrator, such as the DECconcentrator 500.

Station Management (SMT) is part of the FDDI architecture and is in the process of becoming an ANSI FDDI standard. Current implementation of SMT is V6.2. SMT is implemented in software on the controller and does not require CPU cycle time or driver support to implement. A local upgrade utility is available for future updates of SMT.

The DEC FDDIcontroller/EISA supports Digital's EISA-based PCs including applicationDEC433T, DECpc433T and open, industry standard EISA-based systems.

SCO UNIX and Novell NetWare software drivers are available for flexible configurations of networks.

Features

Feature	Benefit
Low cost per connection	Extends FDDI to the PC market
Full performance FDDI-to-EISA connectivity	Provides improved network bandwidth for PC-based systems
Support for SCO UNIX and Novell Netware	Assures FDDI availability for industry-standard PCs
Entry-level router configuration	Ethernet-to-FDDI and FDDI-to-FDDI router with Novell NetWare V3.11 for IPX and TCP/IP networks
Supports downline upgrade utility	Easy upgrade for ANSI-compliant Station Management (SMT) for FDDI

Full FDDI performance of 100 Mb/s at the data link layer provides greater network bandwidth for distributed applications. The FDDI-to-EISA network interface controller features a new chip designed for high speed packet processing. Large bursts of packets are sustained at 100 Mb/s transfer rates with large packet buffer memory on the controller.

DEC FDDIcontroller/EISA Specifications	
Physical Characteristics	
Width	12.2 cm (4.8 in)
Length	14.4 cm (5.68 in)
Power Requirements	
Max 5 Volts	3.3 A
Max 12 Volts	100.0 mA

Prerequisite Hardware

- The DEC FDDIcontroller/EISA connects to FDDI via an ANSI-compliant FDDI concentrator, such as the DECconcentrator 500.
- FDDI-to-FDDI cables (BN24B Series) consist of a dual 62.5/125 micron fiber with ANSI MIC keyed connectors. Supports up to 2 km (1.2 mi) distance between stations.
- Requires one EISA slot. Tested with Intel based PCs including i386 25 MHz/33 MHz and i486 33 MHz/60 MHz that conform to EISA specifications. Examples of EISA-based systems include
  - applicationDEC 433MP
  - DECpc 433T
  - DECpc 433ST
  - COMPAQ SystemPRO
  - Hewlett Packard VECTRA 486/33
  - Dell System 433DE
  - Other industry standard i386 and i486 EISA-based PCs

Prerequisite Software

- SCO UNIX System V Release 3.2.2 or Open Desktop (ODT) V1.1 with TCP/IP protocol support
- Novell NetWare V3.11 client or server provides multiple protocol support

Configuration Recommendations

- General — can configure in any i386 and i486 PC with EISA bus
- Number of DEC FDDIcontrollers allowed per system = no limit (2 tested)
- Can serve as FDDI-to-FDDI or FDDI-to-Ethernet router for TCP/IP and IPX with Novell Netware V3.11 and TCP/IP with SCO UNIX V3.2.2

Ordering Information

This is a customer installable device.

Order Codes	
Option	**Order Code**
DEC FDDIcontroller/EISA	DEFEA-AA
Product Packaging	
DEC FDDIcontroller/EISA The package includes DEFEA-AA module, Owner's Manual, software drivers for SCO and Novell NetWare v3.11 client and server on 3.5-in diskettes.	DEFEA-AA

DEC FDDIcontroller 700
DEC FDDIcontroller 700-C

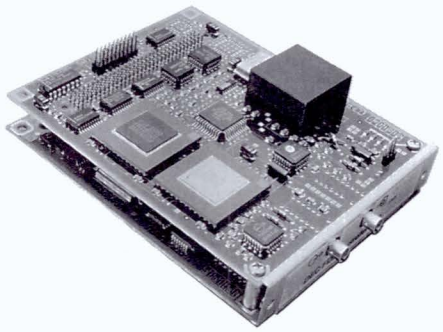

The DEC FDDIcontroller 700 and 700-C are compact, low cost, high performance FDDI devices that enable the direct connection of TURBOchannel based RISC systems such as the DECstation/DECsystem 5000 series, DECsystem 5900, and VAXstation 4000 Model 60 to FDDI networks. Both devices support 100 Mb/s bandwidth for workstations and servers in multivendor LANs and allow customers to build tightly coupled FDDI workgroups.

The DEC FDDIcontroller 700 and 700-C are user-installable options that plug directly into the DECstation/DECsystem 5000 series, DECsystem 5900, or VAXstation 4000 Model 60 high-performance TURBOchannel bus. Using the highly integrated Digital FDDI chipset, the DEC FDDIcontroller 700 and 700-C are ANSI-compliant and occupy only one of the available TURBOchannel slots.

The DEC FDDIcontroller 700 supports multimode fiber connections. The FDDIcontroller 700-C is a copper-based FDDI controller with connections for either 150-ohm Type 1, 2, and 6 shielded twisted-pair (STP), or 50-ohm ThinWire coaxial cable. A switch on the board allows the customer to select between the two types of copper cable connections.

Features

- Provides FDDI single attachment station (SAS) connectivity (through an ANSI-compliant concentrator like the DECconcentrator 500) to the FDDI primary ring for TURBOchannel based DECstation/DECsystem 5000 series, DECsystem 5900, and VAXstation 4000 Model 60.
- Plugs directly into the TURBOchannel bus interface for optimum adapter data link throughput.
- Supports copper (STP and ThinWire) cable as well as multimode fiber for low-cost connectivity and configuration flexibility.
- Supports network-based, high-bandwidth graphics, imaging, and multimedia applications.
- Occupies only one TURBOchannel slot.
- Supports all future TURBOchannel platforms for investment protection.
- Single attachment station (SAS) implementation allows nondisruptive addition/removal of workstations and servers.
- Complies with ANSI X3T9.5 standards to ensure interoperability within multivendor networks.
- Uses flash memory technology to enable downline code upgrades of Station Management (SMT) firmware and other new features via the host CPU.
- Supports local buffering (1 MB) for offloading CPU overhead and enhancing overall performance.
- Uses the high-performance FDDI chipset developed by Digital.
- Supports ULTRIX, OSF/1, and VMS.
- Supports DECnet OSI for RISC ULTRIX and DECnet OSI for VAX VMS.

Applications/Configurations

The DEC FDDIcontroller 700 and 700-C attach directly to the FDDI LAN through the DECconcentrator 500 as a single attachment station (SAS). This configuration maintains the integrity of the FDDI network and protects it from user disruptions.

Organizations will use the DEC FDDIcontroller 700 to provide high-performance workgroup connectivity by attaching workstations and servers directly to an FDDI network. Network-intensive applications, such as imaging, modeling, realtime, database, multimedia or CAD/CAM that require FDDI bandwidth and performance to the desktop and normally place great demands on mid-speed networks, will drive the need for FDDI workgroup connectivity.

The DEC FDDIcontroller 700 supports up to 2 km (1.2 miles) between devices. The DEC FDDIcontroller 700-C, in conjunction with the DECconcentrator 500 copper options, provides solutions for customers with a ThinWire or STP cable plant with point-to-point connections of 100 meters (328 feet) or less.

The DECstation 5000 includes a built-in 802.3/Ethernet interface. With the DEC FDDIcontroller 700 option installed, it can easily be used as an entry-level IP router for an FDDI workgroup needing access to an 802.3/Ethernet backbone. With two FDDIcontroller 700 cards installed, a DECstation 5000 can also function as an IP router between two FDDI workgroups or between an FDDI workgroup and an FDDI backbone. Depending on the number of TURBOchannel slots, the customer can install multiple FDDI controllers.

DEC FDDIcontroller 700 and 700-C Specifications	
Physical Characteristics	
Card Size	11.7 cm × 14.4 cm (4.6 in × 5.68 in). Two piggy-backed printed circuit boards that take up one slot of the TURBOchannel bus interface
Power Requirements	
+5 V	3.75 A
+12 V	60 mA
Operating Environment	
Temperature	5° C to 50° C (40° F to 130° F)
Relative humidity	10% to 90% (noncondensing)

Performance Enhancements

It is important to compare similar devices when making performance comparisons between FDDI devices. Different performance numbers can be obtained at all levels of the OSI networking model, from the physical level to the application level.

The DEC FDDIcontroller 700 hardware performs at a sustained transmission rate of 72 Mb/s and a sustained receive rate of 90 Mb/s over the TURBOchannel bus. Upper level software overhead (drivers, network protocols, and applications), host bus and memory contention, and the interrupt algorithm of the processor are bottlenecks that affect the overall application level performance of all FDDI adapters.

Performance enhancements were added to the operating system to bring the application level performance of ULTRIX and the FDDIcontroller 700 to nearly 40 percent of the entire FDDI bandwidth, or four times faster performance than existing Ethernet implementations.

The following table contains FDDI performance measurements with respect to Ethernet for various applications and transports at the Application Layer. The spray application is most often used to measure how an unreliable transport performs. Applications such as the BSD RCP program (remote file copy over TCP/IP protocols), the file transfer protocol (FTP), and the test TCP (TTCP) protocol all measure performance of a reliable transport protocol. An NFS test measures FDDI performance as a file server. In all cases except FTP, performance improves by at least a factor of two. FTP does not take advantage of the larger buffering gained by using the FDDI system and therefore shows no performance change over Ethernet.

FDDI Applications Performance in Relation to Ethernet

Transport	Application	Rate (Mb/s) (UDP Checksum)	Rate (Mb/s) (UDP no Checksum)	Change over Ethernet
TCP	RCP	18	18	2×
TCP	FTP	5	5	1×
UDP/NFS	NFS Read	20	30	2× (3×)
UDP	Spray	22	35	2.5× (3.3×)
TCP	TTCP	18	18	2×
UDP	TTCP	22	38	2.5× (4×)

Prerequisite Hardware

- Both DEC FDDIcontroller 700 devices are SAS devices and therefore require an ANSI-compliant concentrator like the DECconcentrator 500.

Prerequisite Software

- ULTRIX operating system V4.2.a for DECstations/DECsystems (DECstation 5000 models 25, 100, 120, 125, 200, 240 and DECsystem 5900)
- A future release of VMS is planned to support the VAXstation 4000 Model 60. Prerelease kits will be made available.
- OSF/1 V1.0 (for DECstation 5000 Models 120, 125, and 200)

Ordering Information

The DEC FDDIcontroller 700 and 700-C are customer-installable SAS devices for TURBOchannel based DECstation and DECsystems that connect to the FDDI network through an ANSI-compliant concentrator, such as the DECconcentrator 500.

When implementing a copper FDDI solution (either ThinWire or STP), the FDDIcontroller and concentrator physical connections must match. If the FDDIcontroller 700-C is to connect using STP cabling, order the DECconcentrator 500 STP port card (DEFCN-S*). If the FDDIcontroller 700-C is to connect using ThinWire cabling, order the DECconcentrator 500 ThinWire port card (DEFCN-T*).

An optional loopback connector provides the capability to differentiate between DEC FDDIcontroller 700 and 700-C option faults and network or cable plant faults.

The DEC FDDIcontroller 700 Software Upgrade Package reduces latency through the Adapter, disables the Ring Purger algorithm, and saves the source address of a directed beacon for enhanced network management capability. Customers who were shipped DEC FDDIcontroller 700 options prior to September 1, 1991 may add this capability using Digital's downline-upgrade utility that is included in the software upgrade packages listed in the following table. Each of the packages contains the FDDI device-specific software and documentation along with the downline-load utility license, media, and documentation.

DEC FDDIcontroller 700 Order Codes

Option	Order Code
DEC FDDIcontroller 700 (multimode)	DEFZA-AA
DEC FDDIcontroller 700-C (copper)	DEFZA-CA
Optional Loopback Connector	
Optical Loopback Connector for DEFZA-AA (62.5 micron glass)	17-02970-01
Copper Loopback Connector for DEFZA-CA (D-sub miniature male)	12-35628-01 (H8615)
Upgrade Packages	
DEC FDDIcontroller 700 software upgrade package for ULTRIX RISC, 16MT9	QB-XA2A8-AA
DEC FDDIcontroller 700 software upgrade package for ULTRIX RISC, TK50	QB-XA2A8-AB
DEC FDDIcontroller 700 software Microcode Update License	QL-GD9AA-RA
Update Service Order Numbers	
DEC FDDIcontroller 700 Software Subscription Service ULTRIX RISC, 16MT9	QY-XA2AA-AM
DEC FDDIcontroller 700 Software Subscription Service ULTRIX RISC, TK50	QY-XA2AB-A5
DEC FDDIcontroller 700 Annual Subscription without Media	QX-XA2AA-RA
Literature	
The DEC FDDIcontroller 700 Workstation Adapter	EC-F0796-42

Power Budget and Distance Specifications by Media Type for FDDIcontroller Family

Fiber (diameter in microns)	Power Budget (dB loss budget)	Distance (kilometers)[1] DECconcentrator 500 to FDDIcontroller
DEFCN-Mx, DEFCN-Nx in DECconcentrator 500		
Multimode types:		
50/125	6 dB[2]	2.0 km[3]
62.5/125	11 dB	2.0 km[3]
85/125	11 dB	1.6 km[3]
100/140	11 dB	1.6 km[3]
DEFCN-Lx in DECconcentrator 500		
Multimode types:		
50/125	3 to 5 dB[4]	1.0 km (if loss budget is met)[3]
62.5/125	7 dB	1.0 km[3]
Copper (DEC FDDIcontroller 700-C only)	**Power Budget (dB loss budget)**	**Distances (in meters)[1] Concentrator to Workstation/Server**
DEFCN-Sx in DECconcentrator 500		
Shielded Twisted-Pair (150-ohm)	12 dB	100 m
DEFCN-Tx in DECconcentrator 500		
ThinWire coax (50-ohm)	12 dB	100 m

[1] With no more than 4.0×10^{-11} bit error rate.

[2] The minimum required loss is 12 dB.

[3] Fiber optic cable must meet modal bandwidth and chromatic dispersion requirements specified by the ANSI FDDI standard.

[4] The 50 µm fiber loss budget is very dependent on the quality and numerical aperture (NA) of the fiber.

DEC FDDIcontroller 400

The DEC FDDIcontroller 400 is a high-performance communications controller that enables VAX 6000 and VAX 9000 systems and servers to connect as SAS devices via an FDDI concentrator to a high-speed FDDI network.

The DEC FDDIcontroller 400 consists of three components: a single XMI module with the system interface and FDDI logic; an active I/O bulkhead assembly that houses the fiber optic transceiver and electrical interface; and a woven cable to interconnect the XMI module and bulkhead assembly.

The DEC FDDIcontroller 400 uses an ANSI standard Media Interface Connector (MIC) to provide the optical interconnection to a multimode fiber cable attached to any ANSI-compliant FDDI concentrator, such as the DECconcentrator 500. The DECconcentrator 500 connects Digital's FDDI devices, as well as devices from other vendors, in an FDDI physical star or logical ring topology.

Features

- A full-performance FDDI interface that provides necessary speed for support of network-intensive applications.
- VAXcluster support for configuration flexibility and extended distances between VAXcluster nodes of 2 km to 40 km, depending on the DECconcentrator 500 management option model selected.
- VMS load balancing/auto-failover to a second FDDI adapter or Ethernet controller that assures network availability to systems and servers using the adapter.
- Downline loadable firmware (retained in non-volatile RAM) that supports currency with FDDI standards and easy upgrades for new features and capabilities.
- Support for VAXclusters, DECnet Phase IV, and LAT.
- Supports VAX 6000 and 9000 systems and servers in open systems, and TCP/IP environments.

FDDIcontroller 400 Specifications			
Physical Characteristics			
Height	27.75 cm (11 in)		
Width	23.25 cm (9.25 in)		
Depth	1.4 cm (.65 in)		
Weight	0.55 kg (1.25 lb)		
Power Requirements			
Adapter Card	+5 V	12 A	62 W
Active Bulkhead	+5 V –5.2 V	0.09 A 0.98 A	0.45 W 5.1 W
Operating Environment			
Temperature	5° C to 50 ° C (40° F to 130° F)		
Relative Humidity	10% to 90% (non-condensing)		

Performance Characteristics

At the hardware level, the FDDIcontroller 400 is capable of operating at 100 Mb/s data rates. Actual performance is protocol and application dependent.

Configuration

A VAX 6000 or VAX 9000 system can support two FDDIcontroller 400 devices in the same XMI backplane and up to three devices in a single system.

Prerequisite Hardware

- The DEC FDDIcontroller 400 is an SAS device and therefore requires an ANSI-compliant concentrator, such as the DECconcentrator 500.

Prerequisite Software

- VMS operating system V5.4.3

Ordering Information

DEC FDDIcontroller 400 Order Codes	
Option	**Order Code**
DEC FDDIcontroller 400 (for VAX 6000 systems)	DEMFA-AA
DEC FDDIcontroller 400 (for VAX 9000 systems)	DEMFA-AB
Update Package Order Numbers	
DEC FDDIcontroller 400 Software Update Package for VMS, 16MT9	QB-MF4A8-AA
DEC FDDIcontroller 400 Software Update Package for VMS, TK50	QB-MF4A8-AB
DEC FDDIcontroller 400 Software Microcode Update License	QL-MF3AA-RA
Update Service Order Numbers	
DEC FDDIcontroller 400 Software Subscription Service for ULTRIX RISC, 16MT9	QY-MF4AA-AM
DEC FDDIcontroller 400 Software Subscription Service for ULTRIX RISC, TK50	QY-MF4AB-A5
DEC FDDIcontroller 400 Annual Subscription without Media	QX-MF4AA-RA
Literature	
The DEC FDDIcontroller 400 Adapter	EC-F1305-42

4

Connectivity: Communications Hardware

This section contains the following topics:

Overview	4-1
Communications Hardware Ordering Information	4-3
VAXBI Communications Controllers	4-4
VAXft Communications Controllers	4-12
TURBOchannel Communications Controllers	4-14
Q-bus Communications Controllers	4-16
MicroVAX 2000 Communications Controllers	4-39
Communications Processors	4-47
Transmission Resource Management Systems	4-50
Modems	4-55
Communications Cables	4-65

Connectivity: Communications Hardware

Asynchronous and synchronous communications hardware is used in both Digital-to-Digital and Digital-to-multivendor environments to transmit data between computers, or from terminals to computers. Transmission methods, or protocols, used for asynchronous connections differ from those used for synchronous connections.

Asynchronous transmission, a character-oriented protocol, is used primarily in terminal-to-host communications. Asynchronous transmission is uniquely suited to the low-speed, intermittent data transmission from terminals to hosts. Synchronous transmission, on the other hand, is a more efficient block-oriented protocol that transmits an entire block of characters at one time. Synchronous transmission is used primarily for high-speed communications between computers. (Although Digital's terminal-to-computer connections are asynchronous, IBM and many other vendors use synchronous terminal-to-computer connections.)

When data is sent across most telephone lines, the digital computer signals must be translated into the analog signals used with telephone equipment. This is accomplished through modems. Computer devices are connected to modems through standard interfaces. EIA-232-C/CCITT V.28, EIA-422/CCITT V.11, EIA-423-A/CCITT V.10, and CCITT V.35 are examples of such interface standards. All Digital communications interfaces that include an industry-standard interface can be used to connect Digital systems to a Private Branch Exchange (PBX) via a modem.

A network is a flexible configuration of interconnected terminals, computers, and other intelligent devices (nodes). Nodes can be either close together (local) or far apart (remote). Some devices, because of their high speed, operate only in a local area. Because low-speed devices can be connected across phone lines, they can be used in remote applications as well as locally.

This section includes product descriptions and configuring and ordering information for Digital's asynchronous and synchronous hardware communications products, modems, statistical multiplexers, and cables. ▲ Refer to Section 2 for more information on Digital's 802.3/Ethernet products.

Note: Synchronous products do not support the use of internal clocking.

Communications Controllers

Digital recommends the following communications controllers for ADVANTAGE-NETWORKS:

- Synchronous Controllers
  - DMF32 (UNIBUS)
  - DMV11 (Q-bus for DECnet ULTRIX systems)
  - DEC ISDNcontroller 100 (DIV32, Q-bus ISDN interface)
  - DSV11 (Q-bus)
  - DSH80 (DECsystem 5100)
  - DMB32 (VAXBI)
  - DSB32 (VAXBI)
  - DST32 (for MicroVAX 2000)
  - DEC Multicontroller 581 (DSH32 for MicroVAX 2000)
  - DEC WANcontroller 220 (DSB32 for VAXBI systems)
  - DEC WANcontroller 620 (DSF32 for VAXft 3000)

  ▲ Refer to Section 5 for more information concerning synchronous controllers.
- Asynchronous Controllers
  - DMF32 (UNIBUS)
  - CXY08 (Q-bus)
  - DHQ11 (Q-bus)
  - DHB32 (VAXBI)
  - DMB32 (VAXBI)
  - DHT32 (for MicroVAX 2000)
  - DEC Multicontroller 581 (DSH32 for MicroVAX 2000)
- 802.3/Ethernet Controllers
  - DELUA (UNIBUS)
  - DEUNA (UNIBUS)
  - DELQA (Q-bus)
  - DESQA (Q-bus)
  - DEBNA (VAXBI)
  - DESVA (for MicroVAX 2000, VAXstation 2000, and DECstation 3100)

  ▲ Refer to Section 2 for additional information on 802.3/Ethernet Controllers and PC Controllers.

Phase IV Products

The following products will not migrate to ADVANTAGE-NETWORKS; however, as Phase IV systems, they continue full communications with all ADVANTAGE-NETWORKS nodes:

- PDP-11 systems
- DECsystem-10 and DECSYSTEM-20 systems
- DMV11, and KMV1A hardware for DECnet-VAX systems
- DECSA-based dedicated routers
- DEQNA hardware for DECnet-VAX systems

Modules and Cabinet Kits

To order a communications device, order both the base option module and, if required, the cabinet kit needed to install the module on your system. A cabinet kit includes such things as the appropriate cabling, filter assembly, distribution panel, and brackets. Several cabinet kits are available for each module because cables lengths, distribution panels, or mounting brackets vary for different system cabinets and different electrical transmission standards.

External Cables

The order codes for external cables required by the communications devices are listed in "Communications Cables" at the end of this section.

The following table summarizes the features of Digital's asynchronous and synchronous VAXBI communications controllers.

VAXBI Communications Controllers				
	DMB32	**DMB32**	**DHB32**	**DSB32**
Type	Asynchronous	Synchronous	Asynchronous	Synchronous
Number of Lines	8	1	16	2
Direct Memory Access (DMA)[1]	Yes	Yes	Yes	Yes
Maximum Speed (consult SPD)[2]	38.4 Kb/s	38.4 Kb/s for HDLC, SDLC;19.2 Kb/s for DDCMP; 9.6 Kb/s for others	38.4 Kb/s simultaneously on four channels with custom driver; 19.2 Kb/s simultaneously on two channels with VMS	64 Kb/s for DDCMP; 192 Kb/s (one-line-only) SDLC/HDLC
Software Support	DECnet-VAX	DECnet-VAX; VAX Wide Area Network device driver (prerequisite); VAX P.S.I.[5]; DECnet ULTRIX; ULTRIX WAN Device Drivers	DECnet-VAX	DECnet-VAX; VAX P.S.I.[5] DSB32 SYNC device driver (prerequisite) DECnet ULTRIX; ULTRIX WAN Device Drivers
Operating System Support	VMS	VMS, ULTRIX	VMS, ULTRIX	VMS, ULTRIX
MultiCPU Access[3]	No	No	No	Yes
Modem Control[4]	Full	Full	Yes (with EIA-232 cabinet kit)	Full
Primary Buying Reason	Interface to VAXBI systems, eight asynchronous lines, one synchronous line, one printer port		Direct connection to VAXBI for asynchronous devices	Direct connection to VAXBI or synchronous communication

[1]DMA is the ability to move multicharacter messages between a communication line and CPU memory without interrupting the CUP. This capability yields higher performance.

[2]Actual device speed and throughput depend on current Digital operating system, system configuration, and applications.

[3]MultiCPU Access is the ability to send a message directly to two or more CPUs without routing the message through another CPU.

[4]Modem control refers to the number of signals available to control modem functions on U.S. and European modems. Full modem control includes nine to eleven signals. Limited modem control is five signals. No modem control means only send and receive signals are present for each line.

[5]Can be integrated with DECnet; P.S.I. must be present.

DHB32

The DHB32 is an asynchronous communications controller that enables up to 16 terminals, modems, or serial printers to communicate directly with a VAXBI processor. The DHB32 emulates the asynchronous portion of Digital's DMB32 communications controller by using similar architecture and the same software driver. The functions offered by the eight asynchronous channels on the DMB32 are extended to 16 channels on the DHB32. Unlike the DMB32, the DHB32 has neither a synchronous communications line nor a parallel printer channel.

The DHB32 is available in an EIA-232-D or EIA-423-A version. The EIA-232 version has a distribution panel for 16 asynchronous channels with modem control. The EIA-423-A version has 14 DECconnect channels for connection to terminals, plus two channels that can be switched to EIA-423-A for terminals or EIA-232 for modem control.

Using the standard VMS driver, the DHB32 can operate 16 channels simultaneously at the following maximum throughput speed: 19.2 Kb/s for two channels, and 9.6 Kb/s for 14 channels. Using a custom-developed driver, it can operate four channels simultaneously at maximum throughput speed of 38.4 Kb/s.

Features

- Allows maximum of 16 terminals, modems, or serial printers to communicate directly with a VAXBI processor.
- Provides full modem control with full-duplex, auto-answer, dialup operation.
- Is supported by the ULTRIX operating system.
- Has programmable split-speed operation with automatic flow control of transmitted and received data.
- Includes a full range of diagnostics compatible with the DMB32.
- Provides DECconnect terminal connection with EIA-423-A version.

Prerequisite Software

The DHB32 uses the asynchronous portion of the DMB32 device driver, which is included with VMS operating system V4.6 or later.

Specifications	
Mounting Code	One VAXBI slot
Power Requirements	
dc amps drawn at 5 Vdc	5.56 A
dc amps drawn at 12 Vdc	0.42 A
dc amps drawn at –12 Vdc	0.42 A
VAXBI nodes	One
I/O Panel Units	Eight for EIA-232, four for EIA-423-A

Ordering Information

Order the DHB32-M controller and the appropriate cabinet kit. Cabinet kits include the distribution panel, a loopback connector for diagnostic testing, six adapter cables to connect the module to the distribution panel, and a user guide.

External device cables for the DHB32 must be ordered separately. The EIA-423-A version requires the H3104-B cable and cable concentrator.

DHB32 Order Codes

Option	Order Code
Controller	
16-line asynchronous communication controller for VAXBI processors	DHB32-M
Cabinet Kits	
For EIA-232-D system installation, select one of the following cabinet kits:	
EIA-232-D cabinet kit for VAX 82xx/83xx	CK-DHB32-AM
EIA-232-D cabinet kit for VAX 85xx/87xx/88xx/9000	CK-DHB32-AJ
EIA-232-D cabinet kit for VAX 85xx/87xx/88xx/9000 external VAXBI channels	CK-DHB32-AN
For EIA-432-A system installation, select one of the following cabinet kits:	
EIA-432-A cabinet kit for VAX 82xx/83xx	CK-DHB32-LM
EIA-432-A cabinet kit for VAX 85xx/87xx/88xx/9000 internal VAXBI channels, and VAX 62xx internal and external channels	CK-DHB32-LJ
EIA-432-A cabinet kit for VAX 85xx/87xx/88xx/9000 VAXBI external channel	CK-DHB32-LN
Cables	
Connects EIA-232-D-compatible terminals and printers	BC22D-xx
Connects EIA-232-D-compatible asynchronous modems	BC22E-xx
EIA-432-A cable and cable concentrator for eight devices (order two kits for connecting up to 16 EIA-423-A devices)	H3104-B
Connects EIA-432-A terminals or printers to cable concentrator with modified modular jack connectors	BC16E-xx

Note: Refer to "Communications Cables" at the end of this section for available lengths.

DMB32

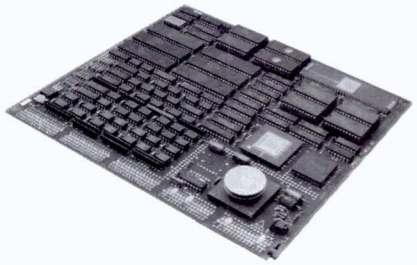

The DMB32 is a high-performance DMA intelligent communications controller for the VAXBI family of computer systems. It provides ten communication lines — eight asynchronous terminal or modem lines, one synchronous line, and one parallel printer line, all supported from a single VAXBI backplane slot.

The eight asynchronous lines can transmit at speeds up to 38.4 Kb/s per line under specified conditions. (Actual line speed and throughput depends on the operating system and user applications.) All lines provide DMA output, full modem control, and split-receive/transmit speed capability.

The one synchronous line supports message framing, and CRC generation and verification with full modem control for the HDLC, SDLC, BISYNC, DDCMP, and GEN BYTE protocols. It is capable of operating at speeds up to 38.4 Kb/s for HDLC and SDLC protocols, and 19.2 Kb/s for DDCMP. Other protocols are supported at 9.6 Kb/s speeds. (The actual throughput depends on the operating system and application.)

The one parallel printer line supports LP32 generic printer specifications, including the LP25, LP26, LP27, LXY12, LXY22, and LG01 parallel printers.

Features

- Asynchronous Communications:
  - Eight communication lines, EIA-232-D compatibility
  - Line speeds up to 38.4 Kb/s (application-dependent)
  - DMA output optimizes terminal I/O performance
  - Split-receive/transmit speeds on a per-line basis
  - Full modem control supports full- and half-duplex point-to-point modems
- Synchronous Communications:
  - One communication line with EIA-232-D, EIA-422-A, EIA-423-A, and V.35 compatibility
  - Line speeds up to 38.4 Kb/s (application-dependent)
  - DMA input and output
  - Full modem control supports full- and half-duplex point-to-point modems
- Parallel printer line supports a wide range of Digital parallel printers, including LP25, LP26, LP27, LP32, LXY12, LXY22 and LG01.
- Comprehensive self-test through ROM-based diagnostics performs extensive functional tests of the DMB32 circuitry at each powerup or reset.

DMB32 Typical Configuration

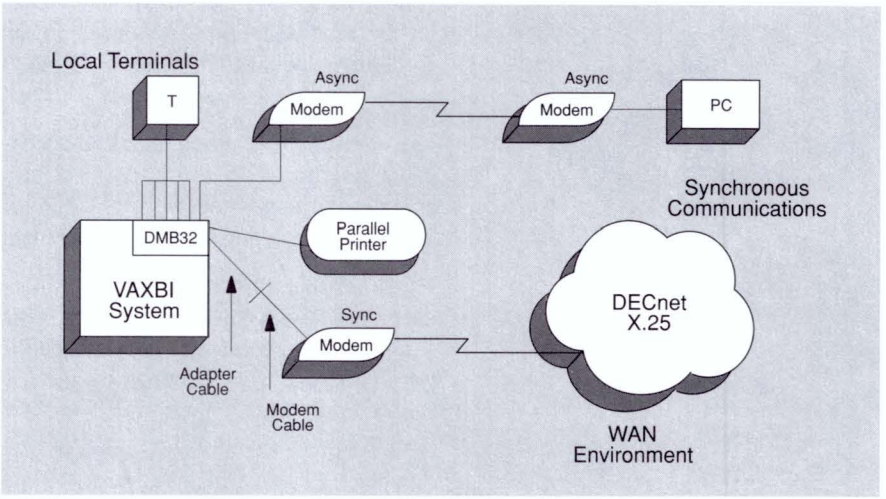

TBG–058–00

Adapter Cables

The appropriate 2-foot adapter cable must be ordered to connect the DMB32 50-pin D-subminiature connector to the selected synchronous communication device. ▲ Refer to the DMB32 Hardware Order Code table for ordering information. The adapter cable can be ordered through the DECdirect Plus catalog.

Distribution Panel

The distribution panel is four panels wide, does not require power, and attaches to the back of the computer system cabinet containing the module. The panel contains eight 25-pin D-subminiature connectors for asynchronous lines, one 50-pin D-subminiature connector for the synchronous line, and one 37-pin D-subminiature connector for the printer port.

Specifications	
Mounting Code	One VAXBI slot
One distribution panel (H3033)	4-panel width
Power Requirements	
dc amps drawn at 5 Vdc	6.75 A
dc amps drawn at 12 Vdc	0.3 A
dc amps drawn at –12 Vdc	0.425 A
Environmental Class	C (Refer to Appendix C for details.)

Prerequisite Software

- VMS V5.0 or later
- VAX Wide Area Network Device Driver, required to use the synchronous line with VMS
- ULTRIX V4.2 or later
- WAN Device Drivers for ULTRIX, V1.0 or later

Prerequisite Hardware

- A VAXBI system configuration (▲ Refer to Software Product Description 27.35, for a list of supported processors.)
- Adapter cable for synchronous line

Ordering Information

The VAX Wide Area Network Device Driver for the synchronous line must be ordered separately to support point-to-point communications with VMS. ▲ Refer to the following sources for further information on supported processor and services:

- Software Product Description 29.64
- Unique Product Identifier VAW

DMB32 Hardware Order Codes

Option	Order Code
Includes base module only; for system installation, select the appropriate cabinet kit and external cables	DMB32-M
For use with VAX 8840, 8830, 8820, 8810, 8800, 8700, 8550, and 8530 internal VAXBI channels; H9657 external VAXBI channels; and VAX 6200-series internal and external channels	CK-DMB32-LJ
For use with VAX 8250 and 8350	CK-DMB32-LM
For use with VAX 8810, 8800, 8700, 8550, and 8530 external (H9652) VAXBI channels	CK-DMB32-LN
Synchronous Line Adapter Cables	
For use with CCITT V.35	BC19F-02
For use with EIA-232-D/CCITT V.24	BS19D-02
For use with EIA-422	BC19B-02
For use with EIA-423-A	BS19E-02

DEC WANcontroller 220

The DEC Wide Area Network Controller 220 (DEC WANcontroller 220) is a 2-line, synchronous communication controller designed specifically for VAXBI systems. It provides host-based connectivity in VAXBI environments for establishing communication with X.25, DECnet and IBM networks by using Digital's standard layered network software.

The DEC WANcontroller 220 supports DDCMP, HDLC, and SDLC protocols at speeds up to 64 Kb/s per line for 2-line operation, and 192 Kb/s for 1-line-only operations running HDLC and SDLC protocols. (Actual throughput is application-dependent.)

The two lines of the DEC WANcontroller 220 are independently managed and operated. This permits concurrent communication using Digital's layered network software products (DECnet-VAX, VMS SNA, VAX P.S.I., DECnet ULTRIX). Any combination of these software products can share the DEC WANcontroller 220.

Features

- Optimizes single host connection for VAXBI systems.
- Runs standard Digital layered network software (DECnet, VAX P.S.I.).
- Line speeds up to 192 Kb/s (application-dependent).
- Direct Memory Access input and output.
- Allows concurrent communication using different protocols.
- Compliant with standard, physical line interfaces.
- EIA 232-D (V.24), EIA 422-A (V.36, V.11), EIA 423-A (V.10) and V.35.

DEC WANcontroller 220 Typical Configuration

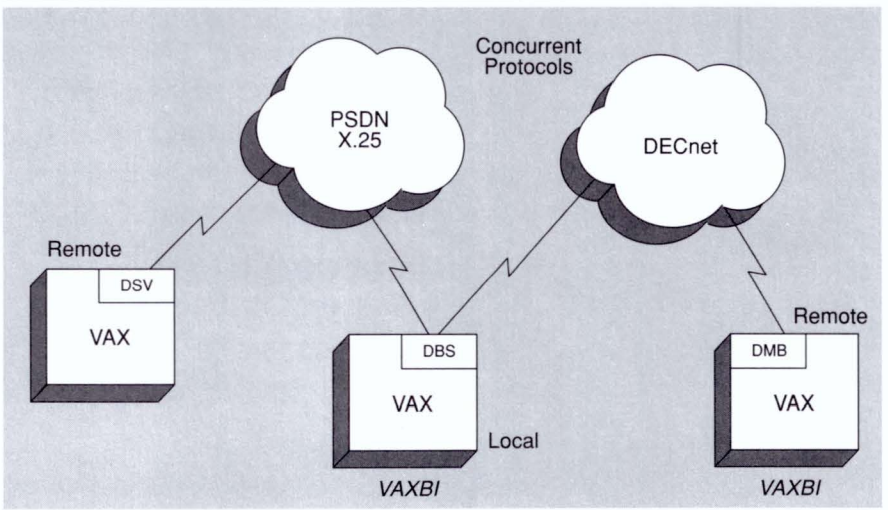

TBG-059-00

Prerequisite Software

VMS V5.0 or higher operating system for support of the Wide Area Device Driver Kit, which includes the DEC WANcontroller 220 driver or ULTRIX V4.1 or later, and DEC Wide Area Device Drivers for ULTRIX.

Specifications	
Mounting Code	One VAXBI slot
Power Requirements	
dc amps drawn at 5 Vdc	4.5 A
dc amps drawn at 15 Vdc	0.08 A
dc amps drawn at –15 Vdc	0.08 A
I/O Panel Units	Two
VAXBI Nodes	One

Ordering Information

Order one DSB32-M module with one appropriate cabinet kit.

Order adapter cables and extension cables separately based on the interface standard required.

DEC WANcontroller 220 Order Codes	
Option	**Order Code**
2-line synchronous communications controller for VAXBI processor	DSB32-M
Cabinet Kits	
Cabinet kit for VAX 62xx/63xx/85xx/87xx/88xx/9000	CK-DSB32-UJ
Cabinet kit for VAX 82xx/83xx	CK-DSB32-UM
Cabinet kit for VAX 62xx/63xx/85xx/87xx/88xx/9000 expansion	CK-DSB32-UN
Adapter and Extension Cables	
EAI 422-A adapter cable	BC19B-02
EIA 232-D adapter cable	BS19D-02
EIA 423-A adapter cable	BC19E-02
V.35 adapter cable	BC19F-02
Extension cable for BC19B and BC19E	BS55D-xx
Extension cable for BS19D	BC22F-xx
Extension cable for BC19F	BC19L-xx

DEC WANcontroller 620

The DEC Wide Area Network Controller 620 (DEC WANcontroller 620) is Digital's only dual-line, multiprotocol, high-performance, synchronous communication option for the VAXft 3000. It is supported by Digital's major communication protocol software products. The DEC WANcontroller 620 operates in two configurations within the VAXft 3000: redundant and nonredundant. In a redundant configuration, a pair of DEC WANcontroller 620s, each operating in a separate zone, are connected together via an external "Y-" box. When an error is detected in an active DEC WANcontroller 620, the system will automatically fail over to the backup monitoring controller without loss of network continuity. Error related failovers are transparent to the application running in the VAXft 3000 system.

In the nonredundant configuration, all DEC WANcontroller 620s are active, thus doubling the amount of available lines. However, if a zone needs servicing, or if there is an unrecoverable error in the controller, there will be an interruption to the synchronous communication lines while the zone is powered down and the controller is replaced.

The DEC WANcontroller 620 is designed to fit into a single slot of the VAXft 3000 backplane. Appropriate synchronous communication adapter cables must be ordered according to the site electrical interface.

Features

- Supports DDCMP, HDLC, SDLC, BISYNC protocols.
- Runs standard Digital layered network software (DECnet-VAX, VAX P.S.I., VMS SNA, VAX 2780/3780).
- Supports full modem control for two lines up to 64 Kb/s.
- Runs multiple concurrent protocols allowing concurrent communication using different protocols on each pair of lines.
- Complies with standard line interfaces enabling connection to wide ranges of devices supporting: RS-449/RS-423, RS-422/RS-446, V.24, V.35, V.36, RS-232-D, V.28, V.10, V.11.
- Supports redundant connections to a single synchronous line. Communication integrity is maintained during zone servicing and during failover due to a faulty controller.
- High data integrity — Each controller provides extensive error checking for received data, and generation of error-check code for transmit data, such that data is always protected against undetected errors through redundancy of system buses or error-check code (except in the case of BISYNC protocols).

Prerequisite Hardware

DEC WANcontroller 620 Order Codes	
Order Code	**Configuration**
Redundant Communications Rules	
DSF32-AA, with DSF32-AB	1. One DSF32-AB for each DSF32-AA. 2. May not place both DSF32-AA and DSF32-AB pair in same zone; i.e., DSF32-AA in one zone, cross-wired with DSF32-AB in the other zone. 3. Connect synchronous line cables of the DSF32 pair to same Y-box. Continue same for other pairs of controllers.
Note: This redundant configuration provides the highest degree of availability and serviceability by a single VAXft system.	
Nonredundant Communications Rules	
DSF32-AA	1. Use only DSF32-AA when wiring nonredundant communications. 2. Maximum of 4 boards per zone, giving 8 lines per zone; 16 per dual-zone system. 3. Add 100-pin terminator to remaining Y-box connector. Continue same for other DSFs.
Note: This nonredundant configuration does not provide for high serviceability; i.e., if service is required to the zone, you will lose all synchronous communications on that zone. Conversely, if a zone fails over, you will lose all synchronous communications on that zone.	

Prerequisite Software

VAX WAN Device Driver V1.2 for VMS V5.4 or higher.

Performance

The DEC WANcontroller 620 driver software will support DDCMP/HDLC/SDLC protocols at speeds up to 64 Kb/s per line for 2-line operation. BISYNC is supported at speeds up to 19.2 Kb/s.

DEC WANcontroller 720

The DEC Wide Area Network Controller 720 (DEC WANcontroller 720, DSYT1) is a high-speed synchronous communication processor for Digital's TURBOchannel RISC-based DECstation and DECsystem product set. The DSYT1 enables standalone RISC workstation users to conveniently and economically establish peer-to-peer communications with DECnet OSI, SNA, TCP/IP and X.25 processing environments, either locally or over telephone lines.

The DSYT1 contains two synchronous ports which can operate at speeds up to 64 Kb/s simultaneously (with like or unlike protocols), or one of the ports can operate at up to 1.544 Mb/s for T1 clear-channel communications over leased telephone lines (external DSU/CSU required). Both HDLC/LAPB and SDLC protocols are supported at these speeds. Clocking may be either internally or externally supplied.

The operation of the DSYT1 is supported by the optional ULTRIX Wide Area Network Device Driver (WANDD). TCP/IP users may interface directly to the ULTRIX WANDD or access X.25 wide area networks with the X.25 Native Mode software. This enables users of Digital's TURBOchannel RISC-based DECstations and DECsystems to use electronic mail, access remote applications or transfer image files with systems from other vendors such as Sun, HP or IBM who also implement TCP/IP over X.25. Similarly, users can utilize other connectivity and interoperability layered software products available from Digital to connect to DECnet OSI and SNA environments for interactive access, information transfer, database access, or communication between cooperating applications.

The following figure illustrates DEC WANcontroller 720 connectivity options.

DEC WANcontroller 720 Connectivity Options

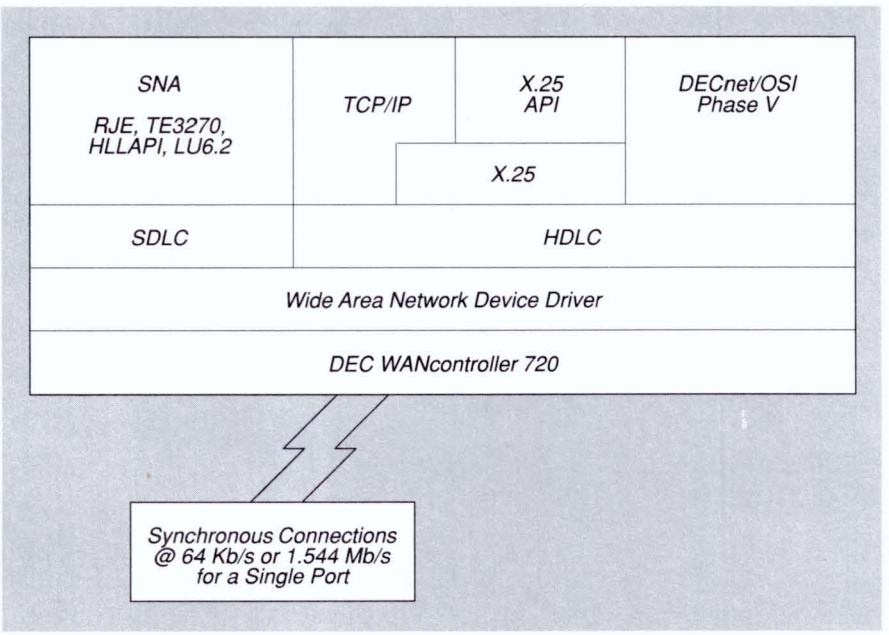

TBG–184–00

Features

- Direct connection to TURBOchannel bus.
- Line speeds up to 64 Kb/s for two ports or 1.544Mb/s (T1 speed) for one port
- Multiprotocol Supports (layered network software support for DECnet OSI, X.25 and SNA)
- ACE compatible

Prerequisite Hardware

TURBOchannel RISC-based DECstation or DECsystem.

Prerequisite Software

The DSYT1 controller's ULTRIX synchronous driver software update will be shipped with the product to update the ULTRIX WAN Device Driver.

An ULTRIX WAN Device Driver license is required for synchronous operations.

Ordering Information

DEC WANcontroller 720 Order Codes

Option	Order Code
DEC WANcontroller 720 2-line synchronous communication controller for TURBOchannel bus. Requires one TURBOchannel slot. Factory installed. Option is customer installable by trained personnel but it is recommended that it be installed by a qualified customer service engineer.	DSYT1-AB
ULTRIX WAN Device Driver license	QL-YMJA8-AA
ULTRIX WAN Device Driver media (TK50) and documentation	QA-YMJAA-H5
Cables and Modem Connections Adapters and extension cables for connection to modems must be ordered separately based on the interface standard requirements.	
EIA-422-A/V.11, V.36 adapter cable	BC19W-02
EIA-423-A/V.10 adapter cable	BC19F-02
V.35 adapter cable	BC19U-02
EIA-232-E/V.24 adapter cable	BC19V-02

▲ For X.25 Native Mode (UPI=YSY) and DECnet OSI ULTRIX (UPI=YT9) support, refer to the Software Product description for order part numbers.

In order to achieve maximum system throughput performance, 16 MB of host memory is recommended.

The following table summarizes the features of Digital's asynchronous and synchronous Q-bus communications controllers.

Q-bus Communications Controllers

Device	CXA16	CXB16	CXY08	DHF11[8]	DHQ11
Type	Asynchronous[1]	Asynchronous[1]	Asynchronous[1]	Asynchronous	Asynchronous
Number of Lines	16	16	8	17 or 32	8
DMA[2]	Yes	Yes	Yes	Yes	Yes
Maximum Speed (consult SPD)[3]	38.4 Kb/s	38.4 Kb/s	38.4 Kb/s	38.4 Kb/s	38.4 Kb/s
Software Support	DECnet-11M-PLUS, DECnet-Micro RSX	DECnet-11M-PLUS, DECnet-Micro RSX	DECnet-11M-PLUS, DECnet-Micro RSX, DECnet-VAX	DECnet-RSX, DECnet-Micro RSX, MicroPower/Pascal	DECnet-VAX, DECnet-RSX, DECnet-Micro RSX, MicroPower/Pascal
Operating System Support	RSX-11M-PLUS, Micro/RSX, VMS	RSX-11M-PLUS, Micro/RSX, VMS	RSX-11M-PLUS, Micro/RSX, VMS	VMS, RSX-11M-PLUS, Micro/RSX, RSTS/E, VAXELN, ULTRIX	VMS, RSX-11M-PLUS, Micro/RSX, ULTRIX, RSTS/E, VAXELN
MultiCPU Access[4]	No	No	No	No	No
Modem Control[5]	No	No	Full	No	Full
Primary Buying Reason	EIA-423-A asynchronous communications (data only)	EIA-422 asynchronous communications (data only)	EIA-232-D asynchronous communications; full modem control	Fiber optic link up to 1 kilometer; environments that prevent the use of copper connections	High-performance; low power consumption; dual-height module with full modem control

[1]Used only on Q-bus systems with BA200 series enclosures.

[2]DMA (Direct Memory Access) is the ability to move multicharacter messages between a communication line and CPU memory without interrupting the CPU. This capability yields higher performance.

[3]Actual device speed and throughput depend on current Digital operating system, system configuration, and applications.

[4]MultiCPU Access is the ability to send a message directly to two or more CPUs without routing the message through another CPU.

[5]Modem control refers to the number of signals available to control modem functions on U.S. and European modems. Full modem control includes 9 to 11 signals. Limited modem control is 5 signals. No modem control means only Send and Receive signals are present for each line.

[6]Can be integrated with DECnet: P.S.I. must be present.

[7]Limited to 19.2 Kb/s with VAX P.S.I. or RSX P.S.I.

[8]DECnet-VAX does not currently support this device.

Q-bus Communications Controllers (Continued)

Device	DLVJ1	DPV11	DSV11	DZQ11	DIV32
Type	Asynchronous	Synchronous	Synchronous	Asynchronous	Synchronous
Number of Lines	4	1	2	4	1 (Basic Rate)
DMA[1]	No	No	Yes	No	Yes
Maximum Speed (consult SPD)[2]	One line at 38.4 Kb/s, two lines at 19.2 Kb/s, four lines at 9.6 Kb/s	56 Kb/s, 9.6 Kb/s for IBM interconnect	Two lines at 64 Kb/s, one line at 256 Kb/s; SNA limited to one line at 64 Kb/s	9.6 Kb/s	64 Kb/s
Software Support	DECnet-RT, DECnet-RSX, DECnet-Micro/ RSX	DECnet-RT, DECnet-RSX, RSX P.S.I,[5] DECnet-Micro/ RSX, VAX P.S.I.,[5] VMS SNA	VAX Wide Area Network Device Driver (prerequisite) DECnet-VAX, VAX P.S.I, VMS SNA, or DECnet-ULTRIX, DEC Wide Area Network Device Drivers for ULTRIX	DECnet-RSX, DECnet-VAX, DECnet-Micro/RSX	DECnet-VAX, VAX P.S.I., (prerequisite; VAX ISDN software)
Operating System Support	RSX-11M-PLUS	VMS, RSX-11S, RSX-11M, RSX-11M-PLUS, Micro/RSX-11S, Micro/RSX-11M, Micro/RSX-11M-PLUS	VMS	RSX-11M-PLUS, Micro/RSX, VMS, ULTRIX, Micro/ RSTS, RSTS/E	VMS
MultiCPU Access[3]	No	No	No	No	No
Modem Control[4]	Limited	Full	Full	Limited	N/A
Primary Buying Reason	Lowest price; FDX configurations	Low cost	High-performance; multiprotocol support	Dual-height module with limited modem control; FDX	Basic Rate Access to ISDN services

[1]DMA (Direct Memory Access) is the ability to move multicharacter messages between a communication line and CPU memory without interrupting the CPU. This capability yields higher performance.

[2]Actual device speed and throughput depend on current Digital operating system, system configuration, and applications.

[3]MultiCPU Access is the ability to send a message directly to two or more CPUs without routing the message through another CPI.

[4]Modem control refers to the number of signals available to control modem functions on U.S. and European modems. Full modem control includes 9 to 11 signals. Limited modem control is 5 signals. No modem control means only Send and Receive signals are present for each line.

[5]Can be integrated with DECnet: P.S.I. must be present.

CX Communications Controllers

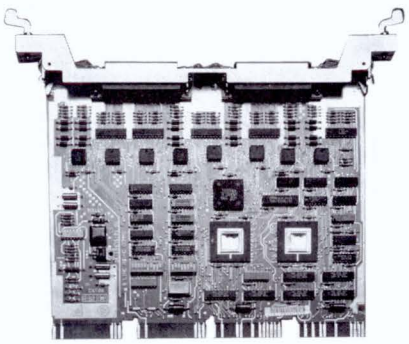

The CX communications controllers provide asynchronous communications for Q-bus systems that use the BA200 series system enclosures. These communications controllers — the CXY08, the CXA16, and the CXB16 — operate at speeds up to 38.4 Kb/s per line, and transmit data using either Direct Memory Access (DMA) or programmed output.

CXY08

The CXY08 provides eight EIA-232-D communications lines to terminals, modems, or serial printers. All lines support full modem control, which permits point-to-point dialup or leased line operation.

CXA16

The CXA16 provides 16 EIA-423-A lines for data-only connections (no modem control) using the DECconnect modular plug connectors.

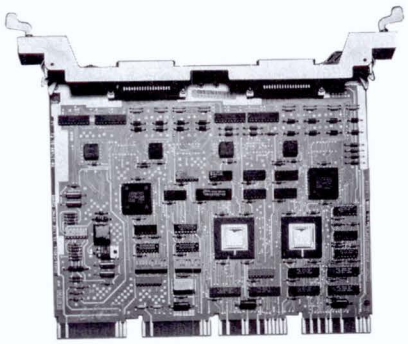

Digital's implementation of EIA-423-A supports local EIA-232-D terminal-to-host communications at 9.6 Kb/s up to distances of 60 meters (200 feet) with the H8571-A passive adapter. EIA-232 terminals using the H8571-A and H3105-A active adapters can take advantage of Digital's Electrical Overstress and Electrostatic Discharge (EOS/ESD) protection, as well as increased distances up to 300 meters (1,000 feet) at 9.6 Kb/s.

VT300 series terminals provide integral EIA-423-A compatibility, which allows connection to the CXA16 at operating distances of 300 meters (1,000 feet) at 9.6 Kb/s, without the need of a passive or active adapter.

CXB16

The CXB16 provides 16 EIA-422 communications lines for data-only connections (no modem control).

The EIA-422 standard offers a high immunity to line noise, important in harsh factory, industrial, and military applications. It allows for line lengths up to 1.2 km (4,000 feet) at all supported line speeds. (The CXB16 is used only with EIA-422-compatible terminal equipment; connection to standard VT100/200/300 series terminals is not supported.)

Features

- High throughput allows transmissions at selectable speeds up to 38.4 Kb/s per line (operating system and user application-dependent). CXY08 total throughput is 50,000 char/s; CXA16 and CXB16 total throughput is 100,000 char/s (10-bit characters: 8 data, 1 stop, no parity).
- Automatic XON/XOFF flow control manages receive and transmit data flow on a per-line basis without program intervention.
- 256-character receive FIFO buffer ensures top system performance during periods of data-intensive input.
- Comprehensive self-test using onboard sequencer performs an extensive test at each system or device reset.
- No cabinet kit is necessary because the bulkhead distribution panel is integral to the CX module handle.

- DMA or programmed output with CXA16 or CXB16 allows the software device driver to dynamically select appropriate transmit mode, either DMA or 64-character FIFO output, depending on user application. This helps to optimize I/O system performance.

Software Support

The CX options are supported by the following operating systems: RSX-11M-PLUS V3.0, Micro/RSX V3.1, and VMS V4.6.

Specifications			
	CXY08	**CXA16**	**CXB16**
Number of lines	8	8	16
Electrical interface standards	EIA-232	EIA-423-A	EIA-422
Direct Memory Access	Yes	Yes	Yes
Modem control	Full	No	No
Mounting space	Quad slot	Quad slot	Quad slot
Asynchronous formats	5-, 6-, 7- or 8-bit characters; odd, even, or no parity; 1, 1.5, or 2 stop bits		
Power Requirements			
dc amps drawn at 5 Vdc	1.5 A	1.4 A	1.6 A
dc amps drawn at 12 Vdc	0.22 A	0.11 A	0.0 A
Bus Loads	ac 3.0, dc 1.5	ac 3.0, dc 1.5	ac 3.0, dc 1.5

Ordering Information

The CX communications controllers in the Q-bus systems use the BA200 series system enclosure (for example, the MicroVAX 3000). Order the -AA options with the purchase of a system; order the -AF options for field-installed add-ons.

The CXA16 and CXB16 include two 25-foot extension cables (BC16D-25), each leading to a 16-connection harmonica. The CXY08 includes two 12-foot cables (BC19N-12), each providing an 8-foot run to a molded box with four EIA-232-D connections.

CX Order Codes	
Option	**Order Code**
Factory-installed 8-line EIA-232-D asynchronous controller with modem control	CXY08-AA
Field-installed 8-line EIA-232-D asynchronous controller with modem control	CXY08-AF
Factory-installed 16-line EIA-423-A asynchronous controller (data only)	CXA16-AA
Field-installed 16-line EIA-423-A asynchronous controller (data only)	CXA16-AF
Factory-installed 16-line EIA-422 asynchronous controller (data only)	CXB16-AA
Field-installed 16-line EIA-422 asynchronous controller (data only)	CXB16-AF

DHF11

The DHF11 is a fiber optic terminal interface that provides a maximum of 32 full-duplex, asynchronous, EIA-423-A serial data channels on Q-bus systems. The DHF11, based on LSI technology, multiplexes and demultiplexes 16 data lines onto one fiber optic cable.

The fiber optic terminal interface provides asynchronous connections to Digital's Q-bus products where the environment prevents copper connections between the devices and the host system. The DHF11 also provides the ability to connect remote (up to 1 km [3,282 feet]) clusters of terminals to a Q-bus host where an 802.3/Ethernet connection is not available. Therefore, the DHF11 can be used in many applications, including data concentration, near or remote terminal interfacing, factory floor cell control, and terminal cluster control. Because the fiber optic terminal Q-bus controller is fully compatible with existing software drivers, new system software drivers are not required.

The DHF11 is a quad-height module that supports one or two 16-line ports. Each 16-line port connects via a dual fiber optic cable to an active terminal concentrator (H3132) that handles 16 full-duplex, asynchronous EIA-423-A serial data lines.

Features

- The remote-powered terminal concentrator with an EIA-423-A interface economically connects data terminals to remote processing equipment when an 802.3/Ethernet LAN is not installed.
- Full-duplex 38.4 Kb/s asynchronous point-to-point terminal connections over fiber optic cables up to 1 km (3,282 feet) long, provide higher bandwidth and longer distances than available with copper connections. (Operating system driver limits speed to 19.2 Kb/s for most applications.)
- The DHF11 uses high-volume 62.5/125 micron fiber optic (industry-standard) cable.
- The host-transparent, programmable split-speed reception and transmission by the terminal user allows support of split-speed terminals with host intervention.
- Because the DHF11 is Q-bus compatible, it can be used with any 16-, 18-, and 22-bit address system (not supported on Q-bus processors that use the BA200 series enclosure).
- Visual indicator for terminal concentrator status allows quick check for proper operation, and self-test and background monitor diagnostics provide realtime notification of hardware failure.
- Remote maintenance mode allows line tests to be invoked from the terminal side.
- The DHF11 isolates the system from lightning — Electrical Overstress (EOS) and static — Electrostatic Discharge (ESD), making it ideal for campus and industrial installations.
- The high terminal-to-cable density reduces cable congestion at the host.
- Self-test and background monitor diagnostics provide realtime notification of hardware failure.

Operating System Support

- MicroVMS V4.6 or later (MicroVMS has been integrated into VMS as of V5.0)
- RSX-11M-PLUS V4.0
- Micro/RSX V4.0
- RSTS/E V9.5
- VAXELN V3.1
- ULTRIX V2.2 or later
- MicroPower/Pascal — Micro/RSX V2.4

Specifications	
Mounting Code	One quad slot
Power Requirements	
dc amps drawn at 5 Vdc	5 A
dc amps drawn at 12 Vdc	0 A
dc amps drawn at –12 Vdc	0 A
Bus Loads	ac 3.7, dc 1.0
I/O Connection Panel Inserts	One size A

Ordering Information

The DHF11 includes a 10-meter (32.8-foot) fiber optic cable for each 16-line terminal concentrator, and is compatible with Digital's BN25J standard fiber optic cables. ▲ Refer to "Communications Cables" at the end of this section for specific cable lengths.

Power cords are supplied with 120 Vac products. For 240 Vac products, a power cord must be ordered for each 16-line terminal concentrator.

DHF11 Order Codes	
Option	**Order Code**
16-line fiber optic terminal controller, 120 Vac, includes power cord for use in the U.S., Canada, Mexico, and Japan	DHF11-AA
32-line fiber optic terminal controller, 120 Vac, includes power cords for use in the U.S., Canada, Mexico, and Japan	DHF11-BA
16-line terminal concentrator upgrade for DHF11-AA, 120 Vac, includes power cord for use in the U.S., Canada, Mexico, and Japan	H3123-B2
16-line fiber optic terminal controller, 240 Vac; requires a power cord	DHF11-AB
32-line fiber optic terminal controller, 240 Vac; requires a power cord	DHF11-BB
16-line terminal concentrator upgrade for DHF11-AB, 240 Vac; requires power cord	H3123-B3
Country kits	BN19*-2E
United States/Canada (not required)	BN19P-1K

*Replace the * with one of the following codes: H (Australia), C (Austria, Belgium, Finland, Netherlands, Norway, Sweden, Portugal, Spain), K (Denmark), M (Italy), S (India), U (Israel), E (Switzerland), A (United Kingdom)

DHQ11

The DHQ11 is a Q-bus communications controller that supplies eight asynchronous communications lines on a dual-size module. The DHQ11 operates in either Direct Memory Access (DMA) or programmed-output mode.

The DHQ11 provides EIA-232-D or EIA-232/EIA-423 signaling to externally connected terminal devices through a choice of distribution panels, called cabinet kits. EIA-232 cabinet kits supply eight 25-pin connectors to support full modem control; Digital's implementation of EIA-423-A cabinet kits supply eight DECconnect modular plug connectors, without modem control, for local terminal connections.

The DHQ11 is the logical choice for connecting local terminals, modems, and serial printers to MicroVAX II and MicroPDP-11 computer systems.

Features

- High-throughput on all eight asynchronous communications lines allows transmission at selectable speeds up to 38.4 Kb/s per line, full-duplex (operating system- and user application-dependent), for a total throughput of 60,000 char/s (10-bit characters: 8 data, 1 stop, no parity), ideal for graphics and videotex applications.
- Compact, dual-size module leaves more backplane space available for additional communications devices.

- Low power consumption with EIA-232 cabinet kit requires only 1.4 amps from the CPU 5 volt power supply; EIA-423-A cabinet kit requires only 2.0 amps, leaving more power available for connecting additional peripheral devices to the backplane.
- 256 character receive FIFO buffer is shared by the eight lines. This ensures top system performance during periods of data-intensive input.
- DMA or programmed-output 64-character FIFO transmit buffer optimizes I/O performance by transmitting data from memory to communications channel with minimum CPU interruptions.
- Automatic XON/XOFF flow control manages data flow in either direction on a per-line basis without program intervention.
- Modem control with EIA-232 cabinet kit provides full modem control for full- and half-duplex, point-to-point communications.
- EIA-423-A cabinet kit with Electrical Overstress/Electrostatic Discharge (EOS/ESD) supports local EIA-232-compatible terminals at 9.6 Kb/s. The terminals may be placed up to 60 meters (200 feet) from the CPU with the H8571-A passive adapter, and up to 300 meters (1,000 feet) from the CPU with the H3105-A active and H8571-A passive adapters. (▲ Refer to the following figure and to Section 2 for more information.)
- Onboard self-test executes an extensive test of DHQ11 circuitry each power on or device reset. Also, a background monitor program continually tests the DHQ11 when it is not engaged in other tasks.

DHQ11 Configuration with EIA-423-A Cabinet Kit

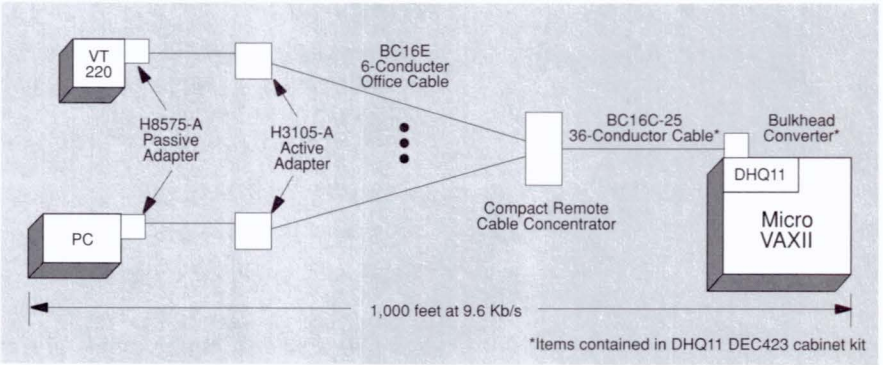

TBG-060-00

CPU and Software Support

The DHQ11 is supported by the MicroVAX II, MicroPDP-11/23, MicroPDP-11/53, MicroPDP-11/73, and MicroPDP-11/83.

The DHQ11 is supported by the following operating systems: RSX, MicroRSX, RSTS/E, Micro/RSTS, VMS, ULTRIX, and VAXELN. It is also supported by MicroPower/Pascal. ▲ For specific applications, consult your sales representative.

Specifications	
Mounting Code	One dual slot
Power Requirements	
dc amps drawn at 5 Vdc	1.4 A with EIA-232 cabinet kit; 2.0 A with EIA-423-A cabinet kit
dc amps drawn at 12 Vdc	0.23 A
Bus Loads	ac 3.2, dc 0.5 with EIA-232 cabinet kit ac 2.9, dc 0.5 with EIA-423-A cabinet kit
I/O Connection Panel Inserts	
Two Size B	EIA-232
One Size B	EIA-423-A
Environmental Class	B (Refer to Appendix C for details.)

DHQ11 Order Codes	
Option	**Order Code**
Asynchronous Q-bus communication controller, includes base module only	DHQ11-M
For system installation, order one of the following cabinet kits:	
Cabinet kits for EIA-232 connection: contain two B-size slot bulkhead distribution panels with 25-pin male connectors and associated cabling to connect the module to the distribution panels. Data cables are not included.	
21-in cable for BA123 box	CK-DHQ11-AA
12-in cable for BA23 box	CK-DHQ11-AB
36-in cable for H9642 cabinet	CK-DHQ11-AF
Cabinet kits for EIA-423-A connection: contain B-size slot bulkhead distribution panels with a 36-conductor cable, compact remote terminal concentrator and associated cabling to connect the module to the distribution panel. Data cables are not included.	
21-in cable for BA123 box	CK-DHQ11-WA
12-in cable for BA23 box	CK-DHQ11-WB
36-in cable for H9642 cabinet	CK-DHQ11-WF

DLVJ1

The DLVJ1 is a 4-line asynchronous communications controller that provides local or remote connection between Q-bus systems and EIA-232-C/CCITT V.28, EIA-422/CCITT V.11, and EIA-423-A/CCITT V.10 terminals and modems. The DLVJ1 acts as four separate devices, making program operations more convenient than with a multiplexer. The DLVJ1 operates at program- or jumper-selectable speeds from 150 Kb/s to 38.4 Kb/s at full-duplex (one line at 38.4 Kb/s, two lines at 19.2 Kb/s, or four lines at 9.6 Kb/s). Split-speed transmit and receive rates are supported on each line, reducing the software demand for the receive line.

The DLVJ1 is compatible with Digital's family of modems and with Bell 100 and 200 series modems and their equivalents. The DLVJ1 is not supported by MicroVMS or VMS.

Features

- Four asynchronous communications lines from a dual-size board.
- Single line speed up to 38.4 Kb/s, two lines at 19.2 Kb/s each, or four lines at 9.6 Kb/s each.
- Limited modem control on all lines supports full-duplex, point-to-point modems.
- Character interrupt input/output.
- Split-receive/transmit speeds on a per-line basis.
- Compatible with EIA-232-C, EIA-422-A and EIA-423-A.

Specifications	
Mounting Code	One dual slot
Power Requirements	
dc amps drawn at 5 Vdc	1.2 A
dc amps drawn at 12 Vdc	0.3 A
Bus Loads	ac 1, dc 1
I/O Connection Panel Inserts	Size A
Environmental Class	C (Refer to Appendix C for details.)

DLVJ1 Order Codes

Option	Order Code
EIA-232-C/CCITT V.28 interface, includes base module only	DLVJ1-M
For system installation select external cables and one of the following cabinet kits:	
For use with BA123 (MicroVAX II) and BA11-MA(MB) (PDP-11/23-S) boxes	CK-DLVJ1-LA
For use with a BA23 box (MicroPDP-11, MicroVAX)	CK-DLVJ1-LB
For use with a dual-cabinet (PDP-11/83, MicroVAX II)	CK-DLVJ1-LF
EIA-442/CCITT V.11 interface, includes base module only	DLVJ1-M
For system installation select external cables and one of the following cabinet kits:	
For use with BA123 (MicroVAX II) and BA11-MA(MB) (PDP-11/23-S) boxes	CK-DLVJ1-EA
For use with a BA23 box (MicroPDP-11)	CK-DLVJ1-EB
For use with a dual-cabinet (PDP-11/83, MicroVAX II)	CK-DLVJ1-EF

DPV11

The DPV11 is a low-cost, single-line synchronous programmable interface that provides local or remote connection between Q-bus systems and other computer systems with EIA-232-C/CCITT V.28 or EIA-232-C/CCITT V.11 interfaces. Operating at speeds up to 9.6 Kb/s at half- or full-duplex with full modem control, the DPV11 is programmable for either byte-oriented protocols (BISYNC) or bit-oriented protocols (SDLC or HDLC). The DPV11 is suited for interfacing to medium-speed synchronous lines for remote batch and remote job-entry applications and is compatible with Digital's family of modems and with the Bell 200 series modems and their equivalents.

Features

- Single-line synchronous communications from a dual size board.
- Line speeds up to 9.6 Kb/s (application-dependent).
- Full modem control supports full- and half-duplex communications.
- Character interrupt input/output.
- EIA-232-C-compatible.

Specifications	
Mounting Code	One dual slot
Power Requirements	
dc amps drawn at 5 Vdc	1.2 A
dc amps drawn at 12 Vdc	0.3 A
Bus Loads	ac 1, dc 1
I/O Connection Panel Inserts	Size A
Environmental Class	C (Refer to Appendix C for details.)

DPV11 Order Codes	
Option	**Order Code**
Single-line synchronous Q-bus communications controller, includes base module only; requires a cabinet kit	DPV11-M
Factory-installed controller for BA200 series enclsoures; no cabinet kit is required	DPV11-SA
Field-installed controller for BA200 series enclsoures; no cabinet kit is required	DPV11-SF
For system installation of the DPV11-M, select one of the following cabinet kits:	
For use with BA123 (MicroVAX II, MicroPDP-11) and BA11-MA(MB) (PDP-11/23-S) boxes	CK-DPV11-AA
For use with a BA23 box (Micro/PDP-11)	CK-DPV11-AB
For use with a H9642 Micro cabinet (MicroVAX II, Micro/PDP-11)	CK-DPV11-AF
For use with CPUs that do not have an I/O connection panel, kit contains a 75 m (25 ft) cable that connects the DPV11-M module to an external device	CK-DPV11-A3

DSV11

The DSV11 module supports synchronous communications at speeds up to 256 Kb/s for standalone MicroVAX and VAX 4000 Q-bus systems. It is the preferred option for host-based wide area communications, with the flexibility to support two lines running different applications.

The DSV11 supports the DDCMP, HDLC, and SDLC protocols at speeds up to 256 Kb/s for 1-line-only operation, and speeds up to 64 Kb/s per line for 2-line operation. The BISYNC protocol is also supported at speeds up to 9.6 Kb/s per line, regardless of whether one or two lines are in operation.

Up to five DSV11 modules may be included in a system box (available slots, power, and bus load permitting), except for the BA23 box where the limit is two DSV11 modules.

DECnet-VAX, VAX P.S.I., VMS SNA, DECnet ULTRIX, and DEC Wide Area Network Device Drivers for ULTRIX software products support the DSV11 module. Combinations of these software products can share the DSV11, with one product controlling both lines, or one product controlling one line while another product controls the second line.

The following table lists the software combinations that can control the DSV11 and the maximum line speeds they support.

Communications Application	1-Line Operation (speed)	2-Line Operation (speed/line)		
		DECnet-VAX	VMS SNA	VAX P.S.I.
DECnet-VAX	256 Kb/s	64 Kb/s	64 Kb/s	64 Kb/s
VMS SNA	64 Kb/s	64 Kb/s	N/A*	64 Kb/s
VAX P.S.I.	256 Kb/s	64 Kb/s	64 Kb/s	64 Kb/s
DECnet-ULTRIX	256 Kb/s	64 Kb/s		
*VMS SNA does not support two DSV11 lines.				

Features

- High-performance.
- Multiprotocol capability supports different applications.
- Configurable communications ports support different line interfaces with one option.

Prerequisite Software

- VMS V5.0 operating system for support of the Wide Area Network Device Driver included with the DSV11.
- ULTRIX V4.1 or later and the DEC Wide Area Network Device Drivers.

A synchronous device driver is available for DSV11 support under VMS V4.7 operating system. ▲ Refer to Software Product Description 28.49 for more information.

Specifications	
Mounting Code	One quad slot
Power Requirements	
dc amps drawn at 5 Vdc	5.43 A
dc amps drawn at 12 Vdc	0.62 A
Bus Loads	ac 3.9, dc 1.0
I/O Connection Panel Inserts	One size B (BA23/BA123/H9642 only)

Ordering Information

The DSV11 is available in versions using a cabinet kit for BA23/BA123 enclosures or with integral distribution panel for BA200-series enclosures. The DSV11 includes the Wide Area Network Device Driver software for support under the VMS V5.0 operating system — license, distribution on TK50 media, and documentation are included. The DEC Wide Area Network Device Drivers for ULTRIX are ordered separately.

For multiple DSV11 modules on one system, order one DSV11-SA/-SF/-AA plus additional DSV11-SB/-SG/-AB options as required.

DSV11 Order Codes

Option	Order Code
First DSV11 controller for BA200-series enclosures, factory-installed. Includes software, one EIA-232 adapter cable, on V.35 adapter cable, and documentation.	DSV11-SA
Extra DSV11 modules for the same system, factory-installed. Includes adapter cables only; no software or documentation.	DSV11-SB
First DSV11 controller for BA200-series enclosures, field-installed. Includes software, one EIA-232 adapter cable, one V.35 adapter cable, and documentation.	DSV11-SF
Extra DSV11 modules for the same system, field-installed. Includes adapter cables only; no software or documentation.	DSV11-SG
First DSV11 controller for BA23/BA123/H9642 enclosures. Includes software, one EIA-232 adapter cable, one V.35 adapter cable, and documentation.	DSV11-AA
Extra DSV11 modules for the same system, field-installed. Includes adapter cables only; no software or documentation.	DSV11-AB
Cabinet Kits	
For system installation of the DSV11-AA and DSV11-AB, order one of the following cabinet kits:	
Cabinet kit for BA123	CK-DSV11-UA
Cabinet kit for BA23	CK-DSV11-UB
Cabinet kit for H9642	CK-DSV11-UF
Adapter Cables	
EIA-422 adapter cable	BC19B-02
EIA-232/V.24 adapter cable	BS19D-02
EIA-423 adapter cable	BC19E-02
V.35 adapter cable	BC19F-02

DZQ11

The DZQ11 is a four-line asynchronous communications controller that provides local or remote connection between PDP-11 and VAX Q-bus systems and EIA-232-C/CCITT V.28 and EIA-423-A/CCITT V.10 terminals, modems, or other systems. The DZQ11 operates at program-selectable speeds up to 9.6 Kb/s at full-duplex with limited modem control on each line.

The DZQ11 is compatible with Digital's family of modems and with Bell 100 and 200 series modems and their equivalents.

Features

- Four asynchronous communication lines from a dual-size module.
- Line speeds up to 9.6 Kb/s.
- Limited modem control on all lines supports full-duplex, point-to-point, modems.
- Character interrupt input/output.
- Compatible with EIA-232-C and EIA-423-A.

Specifications	
Mounting Code	One quad slot
Power Requirements	
dc amps drawn at 5 Vdc	1.0 A
dc amps drawn at 12 Vdc	0.36 A
Bus Loads	ac 1.4, dc 0.5
Environmental Class	C (Refer to Appendix C for details.)

DZQ11 Order Codes	
Option	**Order Code**
4-line asynchronous Q-bus controller, includes base module only; requires a cabinet kit	DZQ11-M
Factory-installed controller for BA200 series enclosures, includes base module only; no cabinet kit is required	DZQ11-SA
Field-installed controller for BA200 series enclsoures, includes base module only; no cabinet kit is required	DZQ11-SF
For system installation of DZQ11-M, select the appropriate external cables and one of the following cabinet kits:	
For use with BA123 (MicroVAX II, MicroPDP-11) and BA11-MA(MB) (PDP-11/23-S) boxes	CK-DZQ11-DA
For use with BA23 box (Micro/PDP-11, MicroVAX)	CK-DZQ11-DB
For use with a H9642 Micro cabinet (MicroVAX II, MicroPDP-11)	CK-DZQ11-DF
For use with CPUs that do not have an I/O connection panel, kit contains a 75 m (25 ft) cable that connects the DZQ11-M module to eight EIA-232 or EIA-423-A devices (non-FCC compliant)	CK-DZQ11-D3

DEC ISDNcontroller 100 (DIV32)

DEC ISDNcontroller 100 is a single-board synchronous communication controller, providing Integrated Services Digital Network (ISDN) connectivity for Q-bus MicroVAX systems. The ISDNcontroller 100 plugs directly into the MicroVAX BA23, BA123, H9642 and BA2xx/BA4xx series enclosures. The device provides ISDN Basic Rate Access (2B+D) connections to central office switches in the United States as well as European ISDN networks (see the Public ISDN Networks and Switches Supported table). The DEC ISDNcontroller 100 will allow the user to take advantage of many 64 Kb/s circuits or packet switching services offered by ISDN.

Each module supports one ISDN Basic Rate Access (BRA) line. A single BRA line consists of two high-performance 64 Kb/s bearer channels or B-channels, and one 16 Kb/s signaling channel (or D-channel). The two ISDN B-channels are independently managed and operated to permit different protocols to run concurrently to two separate destinations. The product has 128 Kb/s of on-board memory to downline load Level 1 software, and uses an on-board 68000 microprocessor to control communication functions.

The DEC ISDNcontroller 100 is driven by two ISDN software packages: VAX ISDN and VAX ISDN Access. The VAX ISDN software is loaded onto the MicroVAX host containing the DEC ISDNcontroller 100, which controls the ISDN connection. It allows support for DECnet-VAX and VAX P.S.I. layered network software under VMS as well as customer-developed protocols (HDLC, SDLC, DDCMP-oriented).

VAX ISDN Access software can be used by any (Q-bus or other bus) VAX VMS DECnet node on an Ethernet for remote access to an ISDN environment.

Features

- Provides high-performance 64 Kb/s circuit-switched access to ISDN services via Q-bus VAX systems.
- Allows two different protocols to run simultaneously, one on each channel, to one or two different destinations.
- Reduces communication line cost with traffic-sensitive Time-Cutting Mode.
- Supports BA2xx/BA4xx, BA23/123, and H9642 MicroVAX enclosures.
- Supports DECnet VAX and VAX P.S.I. layered network software, or customer-developed protocols (HDLC, SDLC, DDCMP-oriented).
- VAX ISDN software can manage ISDN call control and customer-application development on host.
- VAX ISDN Access software allows any VAX VMS-based Ethernet node to manage the ISDN connection.

DIV32 Typical Configuration

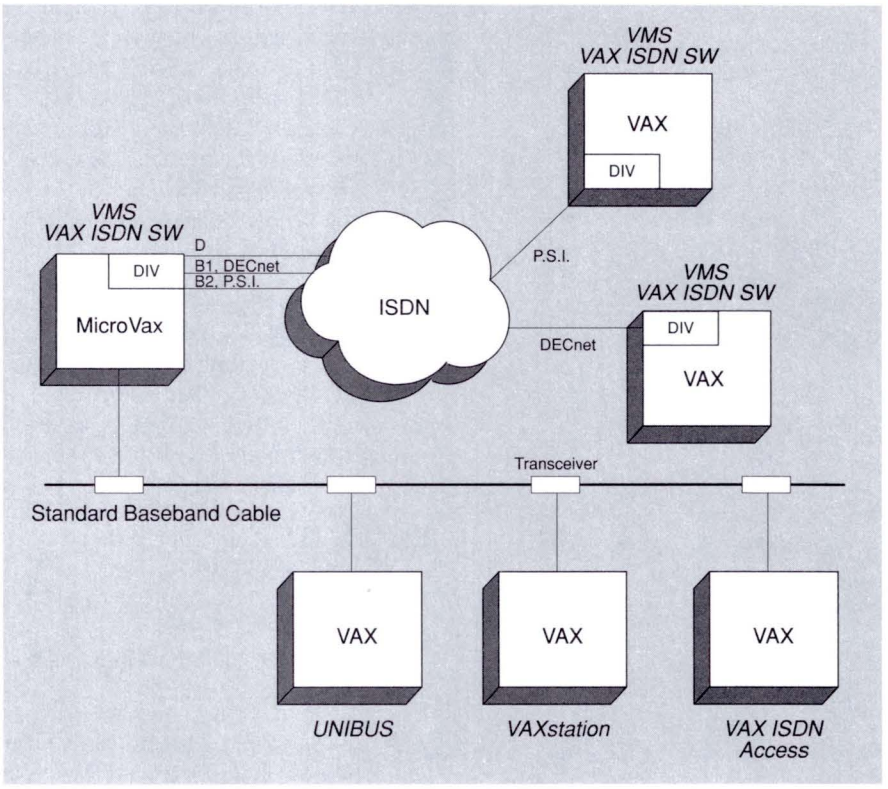

TBG-061-00

Prerequisite Software

The ISDNcontroller 100 Driver software is incorporated into the VAX ISDN software V1.1 for VMS V5.2-1 or higher. ▲ Refer to Software Product Descriptions 31.23 and 31.24 respectively for VAX ISDN and VAX ISDN Access software requirements. Order the VAX ISDN Access software only if you require ISDN communication for Ethernet nodes.

Public ISDN Networks and Switches Supported

Country	Switch/Network
United States	AT&T 5ESS-5E4 Northern Telecom DMS-100
England	British Telecom
France	Numeris-VN2 Network
Germany	Deutsche Bundespost — 1TR6 Network
Japan	INS-NET-V2/ Nippon T&T Corp.
Switzerland	Tested: SwissNet 1 — 1TR6 Access

Specifications	
Mounting Code	One quad slot
Power Requirements	
dc amps drawn at 5 Vdc	5.5 A
dc amps drawn at 12 Vdc	0.0 A
Bus Loads	ac 3.9, dc 1.0
I/O Connection Panel Inserts	One size B (BA23/BA123/H9642 only)

DIV32 Order Codes	
Option	**Order Code**
Q-bus ISDN Basic Rate Access controller, includes base module only; requires a cabinet kit	DIV32-M
Factory-installed controller for BA200, BA440-series enclosure; no cabinet kit required	DIV32-SA
Field-installed controller for BA200, BA400-enclosure; no cabinet kit required	DIV32-SF
Cabinet Kits	
For system installation of the DIV32-M, select one of the following cabinet kits:	
Cabinet kit for BA123	CK-DIV32-MA
Cabinet kit for BA23	CK-DIV32-MB
Cabinet kit for H9642	CK-DIV32-MF

ISDN cables for the DEC ISDNcontroller 100 must be ordered separately. They provide connectivity between the DIV32 I/O plug and the ISDN wall socket.

ISDN Cables for the DEC ISDNcontroller 100	
Cables	**Order Code**
10 ft ISDN Basic Rate Access cable, U.S., France and others	BC23T-10
25 ft ISDN Basic Rate Access cable, U.S. France and others	BC23T-25
10 ft ISDN Basic Rate Access cable, Germany only	BC23U-10
25 ft ISDN Basic Rate Access cable, Germany only	BC23U-25

DMV11

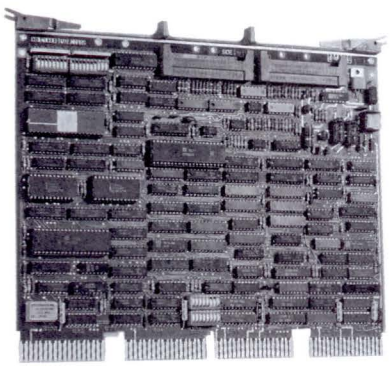

The DMV11 is a microprocessor-controlled, single-line synchronous communications controller that provides local or remote connection between Q-bus systems and other computer systems with EIA-232-C/CCITT V.28, CCITT V.35, or EIA-423-A/EIA-449 interfaces. The DMV11 implements DDCMP in hardware and supports Direct Memory Access data transfers, DECnet point-to-point configurations, and full modem control. It operates at speeds up to 56 Kb/s (depending on the version selected) at half- or full-duplex.

Note: The maximum speed for EIA-232-C connection is 19.2 Kb/s.

Depending on the operating system and layered software, the DMV11 can support up to 12 tributaries. In point-to-point configurations, the DMV11 can communicate with DMC11, DPV11, DMP11, or other DMV11 controllers.

The DMV11 is compatible with Digital's family of modems and with Bell 200 series modems and their equivalents.

Note: The DMV11 will not be supported by future releases of VMS. ▲ Consult your local sales representative for migration procedures.

Features

- Single-line synchronous communications from a quad-size board.
- Line speeds up to 56 Kb/s (application-dependent).
- DMA input/output optimizes communication throughput.
- Full modem control supports full- or half-duplex communications.
- EIA-232-C, EIA-423-A/EIA-449, or V.35-compatible depending on version selected.

Specifications	
Mounting Code	One dual slot (all versions)
Power Requirements	
dc amps drawn at 5 Vdc	3.4 A (DMV11-A, -B, -F), 3.4 A (DMV11-C)
dc amps drawn at 12 Vdc	0.38 A (DMV11-A, -B, -F), 0.26 A (DMV11-C)
Bus Loads	ac 2, dc 1 (all versions)
I/O Connection Panel Inserts	
Size B	DMV11-A, -F
Size A	DMV11-B, -C
Environmental Class	C (Refer to Appendix C for details.)

DMV11 Order Codes

Option	Order Code
Synchronous Q-bus controller for EIA-232-C/CCITT V.28, EIA-423-A/EIA-449, or CCITT V.35 interfaces, includes base module only; requires a cabinet kit	DMV11-M
Synchronous Q-bus controller for integral modem, includes base module only; requires a cabinet kit	DMV11-N
EIA-232-C/CCITT V.28 Cabinet kits	
For use with BA123 (MicroVAX II, MicroPDP-11) and BA11-MA(MB) (PDP-11/23-S) boxes	CK-DMV11-AB
For use with a BA23 box (MicroPDP-11)	CK-DMV11-AB
For use with a H9642 Micro cabinet (MicroVAX II, MicroPDP-11)	CK-DMV11-AF
For use with CPUs that do not have an I/O connection panel, kit contains a 3 m (10 ft) cable that connects with DMV11-M module to an external device	CK-DMV11-A2
EIA-423-A/EIA-449 Cabinet kits	
For use with BA123 (MicroVAX II, MicroPDP-11) and BA11-MA(MB) (PDP-11/23-S) boxes	CK-DMV11-FA
For use with a BA23 box (MicroPDP-11)	CK-DMV11-FB
For use with a H9642 Micro cabinet (MicroVAX II, MicroPDP-11)	CK-DMV11-FF
For use with CPUs that do not have an I/O connection panel, kit contains a 3 m (10 ft) cable that connects with DMV11-M module to an external device	CK-DMV11-F3
CCITT V.35 Cabinet kits	
For use with BA123 (MicroVAX II, MicroPDP-11) and BA11-MA(MB) (PDP-11/23-S) boxes, includes a BC17E cable for connection to modem	CK-DMV11-BA
For use with a BA23 box (MicroPDP-11), includes a BC17E cable for connection to modem	CK-DMV11-BB
For use with a H9642 Micro cabinet (MicroVAX II, MicroPDP-11)	CK-DMV11-BF
For use with CPUs that do not have an I/O connection panel, kit contains a 7.5 m (25 ft) cable that connects with DMV11-M module to an external device	CK-DMV11-B3

DMV11 Order Codes (Continued)	
Option	**Order Code**
Integral Modem Cabinet kits	
For use with BA123 (MicroVAX II, MicroPDP-11) and BA11-MA(MB) (PDP-11/23-S) boxes	CK-DMV11-CA
For use with a BA23 box (MicroPDP-11)	CK-DMV11-CB
For use with a H9642 Micro cabinet (MicroVAX II, MicroPDP-11)	CK-DMV11-CF
For use with CPUs that do not have an I/O connection panel, kit contains a 7.5 m (25 ft) cable that connects with DMV11-N module to an external device	CK-DMV11-C3

KMV1A

The KMV1A is a high-performance Direct Memory Access, single-line programmable communications controller that provides connection between Q-bus systems with EIA-232-C/CCITT V.28, EIA-422/CCITT V.11, and EIA-423-A/CCITT V.10 interfaces. It is capable of communications speeds up to 64 Kb/s. Used on the PDP-11/23, PDP-11/23-PLUS, MicroVAX II, MicroVAX 3500, MicroVAX 3600, BA2xx/BA4xx enclosures, and MicroPDP-11 systems, it uses the Micro/T11 Processor to perform user-defined communications functions, thereby freeing the host to do more application computations.

The KMV1A can be programmed in synchronous or asynchronous modes. It also provides full modem support for Digital's family of modems, the Bell 200 series or equivalent, and European PTT-approved modems.

Software Development Tools, X.25 Link Level, and HDLC Framing package are available for use under RSX-11M and RSX-11M-PLUS systems. Software support is available under VMS for X.25 Link Level and Development Tools up to Version 5.5 of the VMS operating system.

Note: The KMV1A will not be supported by future releases of VAX P.S.I. Consult your local sales representative for migration procedures.

Specifications	
Mounting Code	One quad slot
Power Requirements	
dc amps drawn at 5 Vdc	2.6 A
dc amps drawn at 12 Vdc	0.2 A
Bus Loads	ac 3, dc 1
I/O Connection Panel Inserts	Size B (PDP-11/23, MicroPDP-11, (compatible connections for MicroVAX II, MicroVAX 3500/3600) Size C (PDP-11/23-PLUS)
Environmental Class	C (Refer to Appendix C for details.)

KMV1A Order Codes	
Option	**Order Code**
Controllers	
Field-installed EIA-232-C KMV controller for BA2xx/BA4xx series enclosure; no cabinet kit is required	KMV1A-SF
Field-installed EIA-422 KMV controller for BA2xx/BA4xx series enclosure; no cabinet kit is required	KMV1A-SG
Field-installed EIA-423-A KMV controller for BA2xx/BA4xx series enclosure; no cabinet kit is required	KMV1A-SH
KMV controller for MicroVAX II and MicroPDP-11 systems, includes module only; requires a cabinet kit	KMV1A-M
Cabinet Kits	
For KMV1A-M system installation, select one of the following cabinet kits:	
EIA-232-C for PDP-11/23 and BA123	CK-KMV1A-AA
EIA-232-C for BA23	CK-KMV1A-AB
EIA-232-C for PDP-11/23-PLUS	CK-KMV1A-AC
EIA-232-C for MicroVAX II System 5 (in H9642 cabinets)	CK-KMV1A-AF
EIA-422 for PDP-11/23 and BA123	CK-KMV1A-EA
EIA-422 for BA23	CK-KMV1A-EB
EIA-422 for PDP-11/23-PLUS	CK-KMV1A-EC
EIA-422 for MicroVAX II System 5 (in H9642 cabinets)	CK-KMV1A-EF
EIA-423-A for PDP-11/23 and BA123	CK-KMV1A-FA
EIA-423-A for BA23	CK-KMV1A-FB
EIA-423-A for PDP-11/23-PLUS	CK-KMV1A-FC
EIA-423-A for MicroVAX II System 5 (in H9642 cabinets)	CK-KMV1A-FF
Cables for Modem Connection	
Connects KMV1A-S controllers to EIA-232-compatible modems	BC22U-xx
Connects KMV1A-S controllers to EIA-422 or EIA-423-A-compatible modems	BC22W-xx

▲ Refer to the Software Product Description (SPD) and Unique Product Identifier (UPI) regarding any of the optional software listed below.

- KMV1A RSX and Micro/RSX Development Tools
  - SPD 13.41.00
  - UPI S98
- KMV1A RSX X.25 Link Level
  - SPD 13.43.00
  - UPI S97
- KMV1A RSX and Micro/RSX HDLC Framing
  - SPD 14.22.00
  - UPI S39

- KMV1A MicroVAX Driver
  - SPD 28.23.00
  - UPI VCP
- KMV1A MicroVAX Driver and Development Tools
  - SPD 28.26.00
  - UPI VCR
- KMV1A MicroVAX Driver and X.25 Link Level
  - SPD 28.27.00
  - UPI VCQ
- VAXELN KMV1A Toolkit
  - SPD 29.17.00
  - UPI ZNA

The following table summarizes the features of Digital's MicroVAX 2000 and MicroVAX 3100 communications controllers.

MicroVAX 2000 and MicroVAX 3100 Communications Controllers

	DHT32	DST32	DSH32[6]	DSH32
Type	Asynchronous	Synchronous	Asynchronous	Synchronous
Number of Lines	8	1	8	1
Direct Memory Access (DMA)[1]	No	No	No	No
Maximum Speed (consult SPD)[2]	38.4 Kb/s	19.2 Kb/s	38.4 Kb/s	19.2 Kb/s
Software Support	DECnet-VAX[5], DECnet-ULTRIX	DECnet-VAX;[5] VAX P.S.I., VMS/SNA, DECnet ULTRIX, ULTRIX WAN Device Drivers	DECnet-ULTRIX, DECnet-VAX	VAX P.S.I., VMS/SNA, DECnet-VAX, DECnet ULTRIX ULTRIX WAN Device Drivers
Operating System Support	VMS, ULTRIX	VMS, ULTRIX	VMS, ULTRIX	VMS, ULTRIX
MultiCPU Access[3]	No	No	No	Yes
Modem Control[4]	No	Full	No	Full
Primary Buying Reason	EIA-423-A asynchronous communications; adds eight more lines to MicroVAX 2000 system's standard four lines	Low-cost connection to wide area network	Adds eight lines and a low-cost connection to wide area network	

[1]DMA is the ability to move multicharacter messages between a communication line and CPU memory without interrupting the CPU. This capability yields higher performance.

[2]Actual device speed and throughput depend on current Digital operating system, system configuration, and applications.

[3]MultiCPU Access is the ability to send a message directly to two or more CPUs without routing the message through another CPU.

[4]Modem control refers to the number of signals available to control modem functions on U.S. and European modems. Full modem control includes nine to eleven signals. Limited modem control is five signals. No modem control means only send and receive signals are present for each line.

[5]DECnet-VAX currently supports these devices with certain line and speed configuration restrictions. Refer to SPD 25.03 for more information.

[6]DEC Multicontroller 581.

DHT32

The DHT32 is an 8-line asynchronous multiplexer for the MicroVAX 2000, application compatible with the DHQ11. It provides data-only transmission at speeds up to 38.4 Kb/s, and allows eight additional terminals or peripheral devices to connect to the MicroVAX 2000 system. With the three non-modem lines and one modem line available on the MicroVAX 2000, a total of 12 asynchronous lines can be connected to the MicroVAX 2000 system. (A "network" solution, including DECserver 200 via 802.3/Ethernet, is appropriate if more asynchronous lines are required.)

The DHT32 supports the EIA-423-A standard. Terminals requiring EIA-232 connections can use an adapter. Cables that connect directly to terminals or printers are not provided as part of this option.

Note: The DST32 and the DHT32 (8-line asynchronous communications option) are mutually exclusive, and only one can be installed in a system. If more than four asynchronous lines are required, customers can add terminals using Digital terminal servers. For synchronous communication to an IBM host, an alternate method is to use a DECnet SNA Gateway.

Features

- 8-line, asynchronous, terminal-expansion option gives MicroVAX 2000 a total capacity of 12 asynchronous lines.
- Performance approximates the MicroVAX II systems with DHQ11 asynchronous controller.

Software Support

VMS and ULTRIX operating systems.

Specifications	
Mounting Space	Daughter-boarded to the system module; driver/receiver board located in the expansion adapter
Power Requirements	
dc amps drawn at 5 Vdc	1.5 A
dc amps drawn at 12 Vdc	0.70 A
dc amps drawn at –12 Vdc	0.12 A
Bus Loads	Private bus architecture (one F-type logic board)
I/O Connection Panel Inserts	Located in opening C in the expansion adapter
Environmental Class	B with modified relative humidity (operating) of 10 to 90% (no diskette system), and 20 to 80% (diskette in use)

DHT32 Order Codes	
Option	**Order Code**
8-line asynchronous controller includes serial line logic module, serial line driver/receiver module, 34-way internal ribbon cable, external 7.5-m (25-ft) data cable, and 8-line data cable concentrator (H3104)	DHT32-AA

DST32

The DST32, a single-line synchronous communications controller for the MicroVAX 2000, is a full-duplex line option with bit- or character-oriented protocol. The DST32 supports HDLC and SDLC at speeds up to 19.2 Kb/s, and DDCMP at up to 9.6 Kb/s.

The DST32 option includes the DST32 device driver license and software. Customers can use the DST32 either for VMS/SNA connection or for VAX P.S.I.

For use with ULTRIX order the DEC Wide Area Network Device Drivers.

Note: The DST32 and the DHT32 (8-line asynchronous communications option) are mutually exclusive, and only one can be installed in a system. If more than four asynchronous lines are required, customers can add terminals using Digital terminal servers. For synchronous communication to an IBM host, an alternate method is to use a DECnet SNA Gateway.

Features

- Provides cost-effective, wide area network connection for applications supporting geographically dispersed MicroVAX 2000 systems.
- Supports SNA or X.25 (P.S.I.) networks, or synchronous DECnet (DDCMP).

Prerequisite Software

- VMS SNA or VAX P.S.I. V4.1 using the VMS operating system.
- ULTRIX V4.1 or later and DEC Wide Area Network Device Drivers. ▲ Refer to Software Product Description 32.33.xx for more information.

Specifications	
Mounting Space	Daughter-boarded to the system module; driver/receiver board located in the expansion adapter
Power Requirements	
dc amps drawn at 5 Vdc	2.0 A
dc amps drawn at 12 Vdc	0.07 A
dc amps drawn at –12 Vdc	0.115 A
Bus Loads	Private bus architecture (one F-type logic board)
I/O Connection Panel Inserts	Located in opening C in the expansion adapter
Environmental Class	B with modified relative humidity (operating) of 10% to 90% (no diskette system), and 20% to 80% (diskette in use)

Ordering Information

DST32 hardware comprises a controller module, a driver/receiver module, an internal ribbon cable, and an external modem adapter cable. The appropriate modem cable must be ordered separately for a specific application: BC22F-xx for DST32-AA, and BC55D-xx for DST32-AB and DST32-AC, where xx is the cable length. ▲ Refer to "Communications Cables" in this section for available cable lengths.

Also included are the device driver in both tape and diskette media, and a software license.

DST32 Order Codes

Option	Order Code
Single-line synchronous communications controller for MicroVAX 2000, includes EIA-232/V.24 modem cable with EIA-232-C adapter (supported by VMS SNA)	DST32-AA
Single-line synchronous communications controller for MicroVAX 2000, includes EIA-423/V.10 modem cable	DST32-AB
Single-line synchronous communications controller for MicroVAX 2000, includes EIA-422/V.36 modem cable	DST32-AC

DSH32

The DSH32 or (DEC MULTIcontroller 581) is a dual-function communications controller specific to the MicroVAX 2000, MicroVAX 3100, and VAXserver 3100. The DSH32 consists of an 8-line asynchronous multiplexer and a single-line synchronous interface, and is supported by the VMS operating system, DECnet-VAX networking software, VAX P.S.I. communications software, and VMS SNA communications software. (ULTRIX supports only the eight asynchronous lines.)

The single-line synchronous interface allows operation at software-set speeds up to 19.2 Kb/s (9.6 Kb/s maximum for DDCMP) in non-DMA mode, with full modem control and support for bit- and byte-oriented protocols. The synchronous line is compatible with Digital's family of modems and with Bell 200 series modems and their equivalents.

The 8-line asynchronous multiplexer can be set for speeds up to 38.4 Kb/s with operating software limitation of 19.2 Kb/s. These lines do not have modem control. They will support connection of any EIA-423-A-supported device.

The DSH32 consists of three modules — a controller board, a synchronous driver/receiver board, and an asynchronous driver/receiver board. This option can be shipped preconfigured or as an "add-on" installed by Customer Services.

Features

- Provides cost-effective connection to a wide area network.
- Combines the functionality of the one synchronous line of the DST32 and the eight asynchronous lines of the DHT32. (**Note**: only one of these three options can be installed in the same MicroVAX 2000, MicroVAX 3100, and VAXserver 3100 systems.)

Specifications	
Mounting Space	Daughter-boarded to the system module; driver/receiver board located in the expansion adapter
Power Requirements	
dc amps drawn at 5 Vdc	3.44 A
dc amps drawn at 12 Vdc	0.494 A
dc amps drawn at –12 Vdc	0.240 A
Bus Loads	Private bus architecture (one F-type logic board)
I/O Connection Panel Inserts	Located in openings C and D
Environmental Class	B with modified relative humidity (operating) of 10% to 90% (no diskette system), and 20% to 80% (diskette in use)

Ordering Information

All MicroVAX 2000 systems ordered before March 6, 1989, need the BA40A-BA expansion adapter to use the DSH32 option.

The following external cables are required for connection to modems (xx refers to the cable length in feet):

- BC22F-xx — For connecting DSH32-AA to EIA-232-A-compatible modems
- BC55D-xx — For connecting DSH32-AB or DST32-AC to EIA-422/V.36 or EIA-423/V.10-compatible modems

DSH32 Order Codes	
Option	**Order Code**
Eight asynchronous lines (EIA-423-A), one synchronous line for EIA-232/V.24 communications (and BC19V-02 cable and EIA-232-C adapter connector)	DSH32-AA
Eight asynchronous lines (EIA-423-A), one synchronous line for EIA-423/V.10 communications (and BC19W-02 cable)	DSH32-AB
Eight asynchronous lines (EIA-423-A), one synchronous line for EIA-422/V.36 communications (and BC19U-02 cable)	DSH32-AB

DSW41-AA, DSW42-AA Synchronous Controllers

The DSW41-AA and DSW42-AA are high-performance synchronous communication controllers for the new MicroVAX 3100 Models 30, 40, and 80. These options provide higher performance than currently available with the DSH32 on the MicroVAX 3100 models 10e and 20e. In addition, the synchronous options are no longer bundled with the asynchronous options, but can be used in conjunction with the DHW4x-xx asynchronous options. The benefit is greater choice and configuration flexibility.

The DSW41-AA is a single line synchronous device for the MicroVAX 3100 Model 30. The DSW42-AA is a dual line synchronous devices supported on both the MicroVAX 3100 Model 40 and MicroVAX 3100 Model 80. Both of these devices work in concert with VAX Wide Area Network (WAN) Device Drivers V1.2, which operate in a DECnet Phase IV environment. The WAN Device Driver software is ordered separately from the DSW4x-AA devices.

The communication controllers support DMA transfers for bit oriented protocols and perform character transmission, reception, and framing in microcode. The device driver for these devices (ZTDRIVER) supports Digital Data Communications Message Protocol (DDCMP), High-Level Data Link Control (HDLC), Synchronous Data Link Control (SDLC), and bisynchronous (BISYNC) protocols.

DDCMP, HDLC, and SDLC protocols are supported at speeds up to 64 Kb/s on the DSW4x-AA adapters. The DSW42-AA supports 64 kbs synchronously on both lines. Bisynchronous protocol is supported at up to 19.2 kbs on a single line. There is a 20 Kb/s speed limit for RS232/V.24 cable connection. However, RS423/V.11 and RS422/V.11 support speeds up to 64 Kb/s.

Features

- Provide a cost effective connection to wide area networks.
- Provide configuration flexibility.
- Provide high performance wide area networking on the desktop.

Specifications	
Mounting Code	Daughter-board to the system module
Bus Loads	Private bus architecture
Environmental Class	B

Ordering Information

The DSW41-AA and DSW42-AA are shipped with RS232/V.24 supported cables. The supported cables for RS423/V.10 (cable: BC19E-02) and RS422/V.11 (cable: BC19B-02) can be ordered separately.

DSW4x-AA Order Codes

Option	Order Code
Hardware	
Model 30 – 1 Synchronous line adapter (one BC19D-02/V.24 RS232 Cable Included)	DSW41-AA
Models 40/80 – 2 Synchronous lines adapter (two BC19D-02/V.24 RS232 Cables Included)	DSW42-AA
One EIA-422/V.11 0.6m (2 ft) adapter cable	BC19B-02
One EIA-423/V.10 0.6m (2 ft) adapter cable	BC19E-02
Software	
One-time single-user VAX WAN Device Driver License for use with synchronous port	QL-VAWA9-AA
VAX WAN Device Drivers media (TK50) and documentation	QA-VAWAA-H5
VMS consolidated Software Media and Documentation	
VMS layered product binaries without hard copy documentation	QA-VWJ8A-A8
VMS extended online documentation and layered product online documentation on CD-ROM (DECwindows Bookreader required)	QA-VYR8A-G8
Note: VAX WAN Device Driver included in VMS Consolidated Software Disk CD-ROM media.	

DHW41-xx, DHW42-xx Asynchronous Multiplexers

The DHW41 and DHW42 multiplexers are an excellent alternative to terminal servers. They are high-performance asynchronous multiplexers that provide full-duplex, serial data lines for terminal connections or full modem control. These options are mounted directly inside the MicroVAX 3100 models 30, 40, or 80 systems.

The DHW41-AA and DHW41-BA are supported on the MicroVAX 3100 Model 30 system. The DHW42-AA, DHW42-BA, DHW42-UP and DHW42-CA are supported on the MicroVAX 3100 Models 40 and 80 systems.

DHW41 and DHW42 Overview

Feature	Model 30	Model 40	Model 80
DHW41-AA (8 DEC-423 Lines)	•		
DHW41-BA (4 EIA-232 Lines)	•		
DHW42-AA (8 DEC-423 Lines)		•	•
DHW42-BA (16 DEC-423 Lines)		•	•
DHW42-UP (8 to 16 Line DEC-423 Upgrade)		•	•
DHW42-CA (8 EIA-232 Lines)		•	•

Due to limited space on the systems' distribution panel, the DEC-423 terminal connection options and EIA-232 modem connection options cannot be configured together in the same system. Each of these options can be configured with the DSW4x-AA synchronous communication options in the same system.

The asynchronous interface is modeled on the DHQ11 type of interface, with programmed-only I/O, using the transmit FIFO. The DHW4x options support I/O speeds up to 38.4 Kb/s.

Features

- Provide cost-effective terminal and modem connections.
- Provide configuration flexibility and choice.
- Provide excellent connectivity performance on the desktop.

Specifications	
Mounting Code	Daughter-board to the system module
Bus Loads	Private bus architecture
Environmental Class	B

DHW4x-xx Order Codes	
Option	**Order Code**
Model 30 – 8 DEC-423 asynchronous data lines adapter	DHW41-AA
Model 30 – 4 EIA-232 asynchronous data lines adapter with full modem control	DHW41-BA
Model 40/80 8 DEC-423 asynchronous data lines adapter	DHW42-AA
Model 40/80 16 DEC-423 asynchronous data lines adapter	DHW42-BA
Model 40/80 8 to 16 DEC-423 Upgrade	DHW42-UP
Model 40/80 8 EIA-232 asynchronous data lines adapter with full modem control	DHW42-CA
Note: Addition of DHW4x options increases number of users; a VMS license upgrade may be required.	

KXT11-AB

The KXT11-AB is PDP-11 (T11) 16-bit, single-board computer suitable for communications applications running in ROM or RAM. The processor can support up to 32 KB of RAM, 32 KB of ROM, two asynchronous serial line units, 24 parallel lines, a realtime clock, and Q-bus expansion.

The KXT11-AB is supported by RT-11, V5.1 or later, MicroPower/Pascal, and MACRO-11.

Specifications	
Mounting Code	One double slot
Power Requirements	
dc amps drawn at 5 Vdc	2.8 A
dc amps drawn at 12 Vdc	0.0011 A
Bus Loads	ac 2.7 unit loads, dc 0.5 unit load
Environmental Class	C (Refer to Appendix C for details.)

KXT11-AB Order Codes	
Option	**Order Code**
SBC-11/21 single-board, 16-bit processor with 16 KB static RAM	KXT11-AB

KXT11-CA

The KXT11-CA is a PDP-11 (J-11) 16-bit, single-board processor that can operate as a standalone processor or a peripheral processor.

Applications for the KXT11-CA can be written in either MicroPower/Pascal or MACRO-11. Peripheral Processor Tool Kits are used by the host to communicate with the application on the KXT11-CA. The tool kits support use of the KXT11-CA as a slave processor in PDP-11 Q-bus systems that run RT-11, RSX-11M, or Micro/RSX, and in MicroVAX II systems that run MicroVMS.

▲ For more information on the Peripheral Processor tool kits, refer to the applicable Software Product Descriptions: SPD 12.70 for RT-11, SPD 13.25 for RSX, SPD 18.48 for Micro/RSX, and SPD 28.29 for MicroVMS.

Features

- PDP-11 (T-11) processor with Q-bus compatibility.
- 32 KB RAM with battery backup support.
- Expansion of basic ROM up to 32 KB.
- Two channels for Direct Memory Access.
- Two fully programmable synchronous/asynchronous lines.
- One asynchronous console port.
- Three 16-bit programmable timers.
- One 20-bit programmable parallel port (4 control lines and 16 data lines).

Specifications	
Mounting Code	One quad slot
Power Requirements	
dc amps drawn at 5 Vdc	4.0 A (max)
dc amps drawn at 12 Vdc	0.4 A (max)
Battery backup at 5 Vdc	20 mA (max)
Bus Loads	ac 2.0 unit loads, dc 1.0 unit load
Environmental Class	C (Refer to Appendix C for details.)

KXT11-CA Order Codes	
Option	**Order Code**
Single-board PDP-11 (T-11) 16-bit processor	KXT11-CA

KXJ11-CA

The KXJ11-CA is a PDP-11 (J-11) 16-bit, single-board processor that can act as a realtime processor, coprocessor, or communications processor. As a communications processor, the KXJ11-CA can offload the main processor by handling low and intermediate levels of communications protocol.

Applications for the KXJ11-CA may be written in either MicroPower/Pascal (V2.3 or later) or MACRO-11. Peripheral Processor tool kits are used by the host to communicate with the application on the KXJ11-CA. The tool kits support use of the KXJ11-CA as a slave processor in PDP-11 Q-bus system that run RT-11, RSX-11M, or Micro/RSX, and in MicroVAX II systems that run MicroVMS.

▲ For more information on the Peripheral Processor tool kits, refer to the applicable Software Product Descriptions: SPD 12.70 for RT-11, SPD 13.25 for RSX, SPD 18.48 for Micro/RSX, and SPD 28.29 for MicroVMS.

Features

- PDP-11 (J-11) processor with Q-bus compatibility.
- 512 KB of RAM that can be programmed as shared memory on the Q-bus.
- Expansion of basic ROM up to 64 KB.
- Two channels for Direct Memory Access.
- Two fully programmable synchronous/asynchronous lines.
- One asynchronous serial console port.
- Three 16-bit programmable timers.
- One 20-bit programmable parallel port (4 control lines and 16 data lines).

Specifications	
Mounting Code	One quad slot
Power Requirements	
dc amps drawn at 5 Vdc	6.0 A (max)
dc amps drawn at 12 Vdc	2.0 A (max)
Bus Loads	ac 3.0 unit loads, dc 0.5 unit load
Environmental Class	C (Refer to Appendix C for details.)

KXJ11-CA Order Codes	
Option	**Order Code**
Single-board PDP-11 (J-11) 16-bit processor	KXJ11-CA
KXJ11-CA User's Guide	EK-KXJCA-UG

StrataCom IPX Transmission Resource Manager

The StrataCom Integrated Packet Exchange (IPX) product is a high-performance Transmission Resource Management system that supports the private network environment. It can also be referred to as a T1 Multiplexer or Node l Processor.

The StrataCom IPX is an integral component of Digital's wide area and backbone network strategy. With the IPX product providing access to high-speed T1 or E1 communications lines, Digital can design and supply wide area networks capable of integrating voice, data image, and video applications for a variety of industries. The IPX also provides a complementary capability to the DECrouter product family.

The StrataCom IPX employs a leading-edge switching technology called "FastPacket." FastPacket switching instantaneously allocates bandwidth on demand. Information is transmitted in a uniform packet format over a single, high-speed digital trunk line. This enables the IPX to provide reliable, cost-effective, and high-performance WAN connectivity for computers, PBXs, and other communications equipment in a Corporate Backbone Network environment.

The StrataCom IPX also implements a complementary technology to FastPacket called "Frame Relay." Frame Relay is an emerging packet-mode service that increases the efficiency of LAN-to-LAN communication via a WAN. It is ideal for "burst-type" applications requiring variable amounts of bandwidth.

Features

- FastPacket switching — providing adaptive allocation at speeds up to 1.544 Mb/s (U.S. T1) or 2.048 Mb/s (European E1).
- Reduces T1/E1 network costs with voice compression at a 4:1 ratio and data compression up to 5:1.
- Integrates voice, data, image, FAX and video; protocol independent.
- Provides 99.99% network uptime with a highly fault-tolerant architecture — no single point of failure.
- Supports a maximum of 960 voice connections, 1,200 data connections, and 96 T1/E1 trunk lines.
- Provides Frame Relay support for DEC WANrouter 100/500 and the DECNIS 600 server for improved performance in LAN-to-Lan connectivity.
- Provides 2MB Frame Relay interface, supporting up to 252 permanent virtual circuits per card.
- Fully supports OSI network management standards.

Specifications	
IPX 12 (not available in Europe)	57.2 cm (22.5 in) H × 44 cm (17.3 in) W × 48.26 cm (19 in) D; single-shelf system; tabletop or rackmount; 12 card slots, available for trunks and/or voice/data/frame relay ports; 2 power supply slots (AC); 1 or 2 T1/E1 trunks
IPX 16	152.4 cm (60 in) H × 55.8 cm (22 in) W × 68.6 cm (27 in) D; single-shelf system; floor-standing cabinet; 16 card slots, 14 available for trunks and/or voice/data/frame relay ports; 4 power supply slots (AC or DC); up to 4 T1/E1 trunks
IPX 32	152.4 cm (60 in) H × 55.8 cm (22 in) W × 68.6 cm (27 in) D; double-shelf system; floor-standing cabinet; 32 card slots, 30 available for trunks and/or voice/data/frame relay ports
IPX HUB	Comprised of up to six IPX 16 or 32s; up to 96 T1 trunks; a maximum of 960 voice connections, 1,200 data connections
Environmental	Temperature: 0–50° C (122° F) Relative humidity: 0% to 95% noncondensing
Power Supplies	A maximum of four power supplies per system. 208 Vac/50–60 Hz/600 W or, 240 Vac/50–60 Hz/600 W or, 48 Vdc/600 W
Processors	One or two processor cards; two RS232 network management ports
Voice Ports	Up to 960 voice connections; Integral Voice Activity Detection; optional ADPCM compression
Data Ports	RS232C/D, V.35 and RS422/449 interfaces; up to 1,200 data connections; synchronous data up to 1,344 Mb/s; isochronous clocking up to 128 Kb/s; optional data frame multiplexing (DFM) up to 64 Kb/s
Digital Trunk Interfaces	Up to 96 T1/E1 superframe interfaces; internal or external clock sources at 1.544 MHz or 2.048 MHZ +10 ppm

Ordering Information

A base IPX system unit consists of a cabinet, power supply, and processor card. Additional modules are added depending on customer-specified functionality and performance requirements, as well as requirements for increased availability from redundant modules.

IPX System Unit Order Codes	
Option	**Order Code**
IPX 12 DT I-6 PSM 120 V	DIXSA-AE
IPX 16 208 V	DIXSA-BI
IPX 16 240 V	DIXSA-BH
IPX 16 48 Vdc	DIXSA-BG
IPX 32 208 V	DIXSA-CI
IPX 32 240 V	DIXSA-CH
IPX 32 48 Vdc	DIXSA-CG
IPX 12 rackmount kit 19 inch	DIXSA-XB
IPX rackmount kit 23 inch	DIXSA-XC
IPX OEM equipment cabinet	DIXSA-XD
IPX Application Software	
IPX 12 DFM license	QB-GKUAA-WA
IPX 12 Enhanced Frame Relay license	QB-MTUAA-WA
IPX 16/32 DFM license	QB-GKVAA-WA
IPX 16/32 Enhanced Frame Relay license	QB-MTWAA-WA
Network Management Software	
IPX StrataView License (DEC) RX33	QB-GKZAA-T7
IPX StrataView, DOS license, media, and documentation	QB-GKZAA-TW
IPX StrataView Plus (ULTRIX), license, media, and documentation	QB-XK9AA-TS
Power Supplies	
IPX 12 600 W P/S 120 V	DIXPA-AA
IPX 16/32 600 W P/S 208 V	DIXPA-BE
IPX 16/32 600 W P/S 48 Vdc	DIXPA-BC
Note: All IPX 12, 16, and 32 system units include a system software license.	

IPX Module Order Codes	
Option	**Order Code**
Processor Group Modules	
IPX PCC/F card 6 MB	DIXCA-DA
IPX PCC/F card 4 MB	DIXCA-DB
Digital Trunk Interface Modules	
IPX NTC/C card	DIXTA-AC
IPX E1 back card	DIXTA-BA
IPX T1 back card	DIXTA-BB
Subrate back card	DIXTA-BC
IPX TXR/D card	DIXTA-CA
IPX PIC card	DIXTA-DA
IPX DTI5 utility bus	DIXTA-XA
IPX DTI7 utility bus	DIXTA-XB
FastPacket Voice PAD Modules	
IPX VCD card	DIXVA-BA
IPX VDP utility bus	DIXVA-CA
IPX VDP/A card	DIXVA-DA
IPX VDP/µ card	DIXVA-DB
IPX CIP/B card	DIXVA-EB
FastPacket Data Voice PAD Modules	
IPX SDP card Model C	DIXDA-AF
IPX SDI-RS-232-C back card	DIXDA-AB
IPX SDI-RS-232-D back card	DIXDA-AC
IPX SDI V.35 back card	DIXDA-AD
IPX SDI-RS-449 back card	DIXDA-AE
IPX LDP card Model C	DIXDA-BF
IPX LDI4 DDS back card	DIXDA-BE
IPX LDI4-RS-232-C back card	DIXDA-BB
IPX LDI8-RS-232-C back card	DIXDA-BC
IPX SDP utility bus	DIXDA-CA
Frame Relay PAD Modules	
IPX FRP card Model C	DIXFA-AC
IPX V.35 FRP back card 2 MB	DIXFA-BB

IPX Module Order Codes (Continued)	
Option	**Order Code**
Local Bus	
IPX local bus 1 slot	DIXMA-AA
Blank Faceplates	
IPX front faceplate	DIXMA-BA
IPX back plate 1 slot	DIXMA-CA
IPX 16/32 P.S. blanking plate	DIXMA-CE

Ancillary Equipment

Ancillary equipment such as Channel Banks, Echo Cancellers, and CSUs are required to complete a T1 network configuration. Consult your Network Site Services representative for third-party recommendations for Channel Banks and Echo Cancellers. The Digital DFD03 Channel Service Unit (CSU) should be used to establish the T1 connection.

For information on how to order the IPX family of products, consult your local Digital sales representative, or Digital Services Sales Support in the United States at 1-800-832-6277.

Introduction

Digital provides a series of analog and digital (DSU/CSU) modems for remote wide area networking (WAN) applications that operate in strictly synchronous data format or, in both synchronous and asynchronous data format. Modems are available that operate at 300, 1,200, 2,400, 4,800, 7,200, or 9,600 baud on public switched telecommunication lines (PSTN), private leased telecommunications lines (PLTN), or both.

The analog modems provide an EIA-232-D compliant interface to the data terminal equipment (DTE). Depending on the model, they comply with the following Bell and International Telegraph and Telephone Consultative Committee (CCITT) Modem Recommendations: Bell 103, Bell 212, CCITT V.22, CCITT V.22bis, CCITT V.29, and CCITT V.32.

The DSU/CSU (digital) modems provide either an EIA-232-D or CCITT V.35 compliant interface to the DTE. Depending on the model, they comply with AT&T Publications 62310, 62411, 41451, and 54016.

All Digital modems are FCC Part 68 and Canadian Department of Communications (DOC) registered for direct connection to public telephone networks. These modems are available in two formats: a series of compact desktop enclosures; and a series of modules (the DF100 series) that can be mounted in the DF108-RM multiple rack enclosure or the DF100-DT desktop enclosure.

This product set is available in the United States and Canada.

Literature

Contact your local Sales Communications Center to obtain the information sheets on the following products:

- Digital's Family of Modems (EC–F0943–49)
- DECmodem V32 V.32 9600 bps Modem (EC–F0614–49)

Ordering Information

▲ Refer to the following table for functional characteristics and connective parameters. Turn to the specific product description for ordering information.

For more information, call the EIC Sales Support Team in the United States at 1-800-832-6277.

Modem Selections

Specifications	Analog Modems			Digital Modems		
Modem Model	**DF242**	**DF296**	**DF196**	**DFD01**	**DFD02**	**DFD03**
Operation						
Full-Duplex						
Dial up	X	X	X			
Leased 2-wire		X	X			
Leased 4-wire						
DDS 4-wire				X		
T1 4-wire					X	X
Half-Duplex						
Dial up						
Leased 2-wire						
Leased 4-wire						
Data Rate — Asynch (fallback)						
9,600 b/s		X	X			
4,800 b/s		(X)	(X)			
2,400 b/s	X	(X)	(X)			
1,200 b/s	(X)	(X)	(X)			
300 b/s	(X)					
Data Rate — Synch (fallback)						
1.536 Mb/s					X	X
1.344 Mb/s						X
56 Kb/s				X		
19,200 b/s				X		
9,600 b/s		X	X	X		
7,200 b/s						
4,800 b/s		(X)	(X)	X		
2,400 b/s	X	(X)	(X)	X		
1,200 b/s	(X)	(X)	(X)			
Compatibility						
Bell 103J	X					
Bell 212A	X	X	X			
CCITT V.22	X	X	X			
CCITT V.22 bis	X	X	X			
CCITT V.27 bis						
CCITT V.29						
CCITT V.32		X	X			
Bell 306						X
AT&T 62411					X	X
AT&T 62310				X	X	X
AT&T 41451					X	X

Modem Selections (Continued)

Specifications	Analog Modems			Digital Modems		
Modem Model	**DF242**	**DF296**	**DF196**	**DFD01**	**DFD02**	**DFD03**
Command Language						
Proprietary						X
DMCL	X	X	X			
AT	X	X	X			
None				X	X	
Error Correction (fallback)						
MNP (level)	(3)	(5)	(5)			
X.PC	X					
Security Features						
Access	X	X	X			
Callback	X	X	X			
Other Features						
Speed Buffering (max rate)	(9.6)	(19.2)	(19.2)	N/A	N/A	N/A
Online Fallback/Fall-forward		X	X			
Auto Dial/Answer	X	X	X	N/A	N/A	N/A
Dial Number Storage	30	99	99	N/A	N/A	N/A
Electrical Interface to Terminal/Computer						
EIA-232				X		
EIA-422	X	X	X			X
CCITT V.24/V.28	X	X	X	X		
CCITT V.35				X		X
Bipolar AMI					X	X
Mechanical Interface to Terminal/Computer						
DB25S	X	X	X	X		
DB37S (EIA-449)						X
34 POS Female (V.35)				X		X
BD15S (Bipolar AMI)					X	X
Mechanical Interface to Telephone Line						
RJ-11	X	X				
RJ-45S	X	X				
RJ-21X (rackmount)			X			
RJ-48S or RJ48-X				X	X	X
Terminal Block			X	X	X	X
Ampere (rack modules)						
+5 Vdc Supply	N/A	N/A	1.5	N/A	N/A	N/A
Packaging						
Rackmount			X			
Desktop	X		X	X	X	
Rack Compatibility						
DF100-RM (max) no. modules	(9.6)	(19.2)	(19.2)	N/A	N/A	N/A
DF108-RM (max) no. modules	N/A	N/A	8	N/A	N/A	N/A

Private Leased Telecommunications Network (PLTN) Modems

This DF100 series modem was designed to utilize two standard enclosures: one for standalone desktop modem applications (DF100-DT), and one for multiple-modem (rackmount) applications (DF108-RM).

The DF129-AM is a CCITT V.29 (9,600 baud), 4-wire PLTN synchronous modem for use on leased point-to-point network applications.

Features

9.6 Kb/s synchronous, full-duplex, leased-line modem:

- CCITT V.29 compatible
- Fallback speeds of 7.2 Kb/s and 4.8 Kb/s
- Desktop and rack versions

Scholar Plus Modem

The DF242-CA Scholar Plus modem offers a unique security feature to protect proprietary databases, MNP and X.PC error correction to assure accurate data transfers, the industry-standard "AT" command language, and the simplified Digital Modem Command Language (DMCL) (VMS-type commands).

One of four levels of security can be set:

1. Password Access — A predefined password must be keyed before the host system is accessed.
2. Password and Callback — The password is predefined along with a telephone number. The modem requests the password and then disconnects. The modem calls the telephone number associated with the password, and initiates a second password verification.
3. Password, Callback, Telephone Number Checked — The password and telephone numbers are preset. The modem requests that the dial-in caller key in a password and callback phone number or the number assigned to that password as the callback number.
4. Password, Request for Phone Number — The password is requested. The user can then type an alternate phone number or the number assigned to that password as the callback number.

An audit trail of dial attempts is maintained, and the parameter settings can be secured by password to prevent unauthorized modifications.

The autodial feature includes mixed dialing of up to 30 different linked numbers, local or long distance. In the event of a busy or no-answer signal, the linked number will be dialed. An embedded speaker allows audible monitoring of call progress. Modem parameters are stored in nonvolatile memory and are not lost when powered off.

Ordering Information

Scholar Plus Order Code	
Option	**Order Code**
DF242 desktop modem 2400/1200 FDX, for United States/Canada	DF242-CA

DECmodem V32 Modem



The DECmodem V32 9.6 Kb/s modem is an enhanced version of the Scholar Plus modem with additional capabilities. Its design is compatible with industry standards and it can be used in a wider range of applications.

The DECmodem V32 is capable of synchronous and asynchronous operation at speeds of 9,600, 4,800, 2,400, or 1,200 bits/s over dialup or leased lines. The modem features a complete security system, adaptable speed capabilities, and enhanced error correction. It is designed to ensure that your data is transmitted error-free and at high speeds in a secure environment.

The DECmodem V32 offers adaptable data transfer speeds from 1,200 to 9,600 bits/s, making it completely compatible with both the Scholar and the Scholar Plus modems. When data transfer is required between systems, the protocol fallback feature will match the operating speed of the remote modem automatically. When operating in the V.32 protocol at 9.6 Kb/s, the modem can be optioned to fall back to V.32 at 4.8 Kb/s if the telephone line conditions degrade. When line conditions improve, the modem will fall forward from 4.8 Kb/s to 9.6 Kb/s.

The Error Correction feature utilizes Microcom Networking Protocol with data compression (MNP class 5), which under perfect line conditions can provide an actual throughput of up to 19.2 Kb/s.

A maximum of 99 telephone numbers may be stored in the memory. Dial strings may be up to 50 characters in length for access codes such as MCI, credit card numbers, and international numbers.

Speed buffering operates at 19.2 Kb/s, which allows Data Terminal Equipment (DTE) to communicate with the modem at 19.2 Kb/s while the link speed can be from 1,200 to 9,600 bits/s. This is because it can accommodate data overruns with XON/XOFF and/or hardware flow control (RTS/CTS).

DMCL Enhancements

The Digital Modem Command Language (DMCL) HELP function gives a user quick access to a single help screen, showing command verbs and examples. Command Line Editing allows the user to recall a particular string of commands by using the UP and DOWN arrows. This is particularly useful when using the Expert Mode and you wish to change or recall a particular command string.

Security

The Access Security feature allows authorized personnel with a valid password to access the modem parameters, dial memory and/or callback memory locations. This will also allow the user to analyze and modify the local and/or remote modem configuration parameters.

The Callback Security feature, enabled from a switch on the modem, screens all incoming calls, whether manual or auto-answered, before allowing access to the host system. It also maintains a Dial-in Audit Trail for auditing of valid and invalid access attempts.

The DECmodem provides a graduated Callback Security System that can program security at varying levels:

- Level 1 — Allows pass-through via password.
- Level 2 — Allows callback to a predefined phone number with password security.
- Level 3 — Allows callback to a predefined phone number with password security and phone number validation assigned to the password.
- Level 4 — Allows callback to a predefined or user-defined phone number with password security.

Once the DECmodem V32 has performed a security check and validated the password and phone number, the modem will call back or allow the call to pass through to the system. Depending on the level of security selected, the user will be on line and ready to transmit data.

Features

- Compatible with CCITT V.32 (9,600 and 4,800 bits/s), CCITT V.22 bis (2,400 bits/s), CCITT V.22 (1,200 bits/s), Bell 212A (1,200 bits/s) industry-standard recommendations.
- Microcom Networking Protocol (MNP class 5) online error correction protocol provides data compression and error-free communications.
- Adaptable speed capabilities automatically fall back to lower speeds or fall forward to higher speeds for greater efficiency.
- Digital Modem Control Language (DMCL) provides user-friendly commands and a Help screen.
- DECmodem V32 has an alternate industry-standard "AT" command set.
- Optional levels of security help control access to host system and modem.
- Authorized access modifies set-up parameters and options for the local and modem mode.
- Dial string linkage capability allows automatic redial to alternate phone numbers on a single dial request (DMCL mode).
- Storage capabilities for up to 99 telephone numbers that can be 50 characters long.
- Modem parameters can be reviewed and reconfigured from a remote system (DMCL mode).

Specifications	
Physical Characteristics	
Height	7.62 cm (3 in)
Width	15.24 cm (6 in)
Length	25.40 cm (10 in)
Power Requirements	120 V, 60 Hz

Ordering Information

The DECmodem V32 fits under a standard desktop telephone. Application will typically be either a dialup or, by way of a jumper connection, a 2-wire leased line application.

DECmodem V32 Order Code	
Option	**Order Code**
DECmodem V32 Desktop	DF296-DA

DECmodem V32 Rackmount

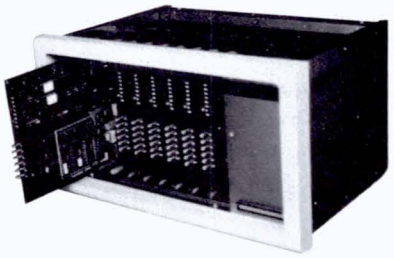

The DECmodem V32 rackmount version provides all the features and benefits of the desktop model, with a few additional features.

As business communications requirements grow, and dialup connections are no longer suitable, the DECmodem V32 rackmount can be easily modified to accommodate leased lines. Instead of starting another modem search, the DECmodem V32 rackmount can be used in a leased line environment by changing a front panel switch from PSTN (Public Switched Telephone Network) to PLTN (Private Leased Telephone Network) and attaching the private line wiring.

In addition to the security features and error correction options provided with the desktop DECmodem V32, the rackmount modem provides the ultimate in reliability, with a dial backup capability. This feature can detect a failure in the leased line connection and automatically switch into Dialup mode that will automatically dial a prestored number on a dialup line. The rackmount version can be configured to use the Dial Backup facility through the Digital Modem Command Language (DMCL), and requires no operator intervention.

Application(s) for the rackmount version will, similar to the desktop version, be either a dialup or 2-wire leased line application. Also, both the desktop and rackmount versions will operate in an asynchronous DECnet environment. The DECmodem V32 is designed to support intelligent leased line applications. This includes synchronous and asynchronous DECnet, MUXserver to DECmux composite link and environments where the DTE interface contains a higher level of control than the standard interactive VAX or DECserver asynchronous port.

In the rackmount version, the user can mount up to eight DF196-DM modules in the modem rack enclosure, DF108-RM.

Note: Due to increased power requirements and FCC Part 15 regulations, the DF196-DM cannot be installed in the DF100-RM rack or the DF100-DT standalone enclosures.

Ordering Information

DECmodem Rackmount Modem Order Code	
Option	**Order Code**
DECmodem V32 Rackmount Modem	DF196-DM

Multiple Modem (Rackmount) Enclosure

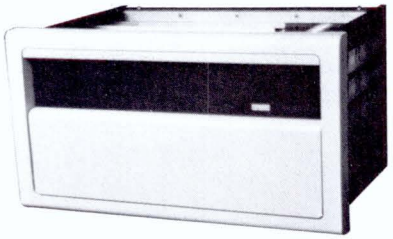

The multiple modem (rackmount) enclosure DF108-RM is a 12-amp, 8-slot enclosure. It is compatible with the entire DF100 series rack modems and can accommodate up to eight modems in any combination of DF100 series and DECmodem V32 rackmount modules. Modules can be added or changed from the front of the enclosure without disconnecting ac power or disrupting other online users.

The enclosure connects to either dialup or leased telephone lines. For dialup communications, RJ21X telephone service is required, and for leased line communications, either 2- or 4-wire telephone service is required.

Features

- Provides a 50-cinch connector that is compatible with the standard RJ21X Telephone Service.
- Provides an easy-to-use ON/OFF power switch.
- Interface compatible with the EIA RS-232-D standard, (up to 15 meters [50 feet]).

Specifications	
Physical Characteristics	
Height	26.67 cm (10.5 in)
Width	48.16 cm (19 in)
Length	34.29 cm (13.5 in)
Power Requirements	120 V, 60 Hz
Environmental Class	B (Refer to Appendix C for details.)

Ordering Information

Modem Rack Enclosure Order Codes	
Option	**Order Code**
12-amp modem rack enclosure for United States/Canada	DF108–RM
Optional Power Supply	H7013

Data Service Unit/ Channel Service Unit (DSU/CSU)



The DSU/CSU is used in conjunction with DDS and T1 transmission facilities.
▲ Refer to the DDS and T1 descriptions in this section for more information.

The (DSU/CSU) is analogous to a modem but is used to connect to Data Phone Digital Service (DDS) and T1 digital communication facilities. This family of high-speed digital data communications equipment is manufactured by Dowty Information Systems.

The DSU/CSU provides the standard interface to Data Terminal Equipment (DTE) that is sending information via DDS facilities. The DSU converts datastream to bipolar format for transmission over the digital facility; a CSU terminates the telecommunications circuit on the customer's premises and performs line conditioning functions, ensures network compliance to FCC rules, and responds to loopback commands from the Central Office. A DSU/CSU combination is needed on DDS.

Multirate DSU/CSU

The Multirate DSU/CSU product is compatible with the DECrouter 250, DECrouter 2000, Vitalink TransLAN and the MUXserver and DECmux products: it is intended for use on the DDS network. In addition to combining DSU/CSU functions, this product operates at switch selectable speeds of 2,400, 4,800, 9,600, 19,200 and 56,000 bits/s. This desktop unit can be used in synchronous, point-to-point application on the V.35 interface. In addition to being able to use this product in the DDS environment, it can also function as a point-to-point, Limited Distance Modem (LDM) on a customer-owned, 4-wire facility. Other features include built-in diagnostics to rapidly isolate and diagnose problems, a built-in test pattern generator, and three clock options.

T1 CSU

The T1 CSU product is compatible with the Vitalink TransLAN product (with the DS-1 interface installed). No DSU is required. The T1 CSU product allows the TransLAN bridge to utilize high-speed transmission facilities such as Accunet T1.5. In a network operating at 1.544 Mb/s, minimizing downtime is a primary consideration. This T1 CSU product provides protection for the network and includes test and diagnostic capabilities to quickly isolate problems. It protects the network by automatically correcting "1-density" rules. Signal jitter is eliminated by elastic buffers, 64 bits deep, both on the line side and on the terminal equipment side. Where the carrier offers 64 Kb/s clear-channel services (which requires B8ZS data formatting), the T1 CSU can convert from AMI to B8ZS format.

The T1 CSU is usually line-powered; however, with a local power supply, the unit can function as a Limited Distance Modem (LDM), supporting distances up to 900 meters (3,000 feet) over private, 4-wire facilities. When the CSU functions as an LDM, timing can be established by the unit itself or by an external source.

In either the LDM or CSU mode, the unit can accept timing from two external sources in order to provide backup capability. Other timing options include frequency-lock DTE and repeater operation. Loopbacks provide for testing of the entire CSU, both local and remote Data Terminal Equipment (DTE), and the digital transmission lines. Fourteen front panel indicators show operational and test status. Separate indicators are provided for the CSU, the DTE and the channel.

T1 ESF DSU/CSU

The T1 Extended SuperFrame (ESF) DSU/CSU product allows your DECrouter 2000 or TransLAN (without the DS-1 interface) to use either conventional T1 services or T1 ESF facilities.

The T1 ESF is a T1 framing format requiring one fourth the bandwidth of D4 for frame synchronization and provides additional diagnostic capabilities compared to standard D4 T1 framing.

This product provides easy control over system configuration and testing via the front panel. Other sophisticated features include:

- Clear channel conversion (B8ZS format).
- Network protection through correction of "ones-density" violations.
- Internal, frequency-lock to DTE and repeater-timing options, and backup timing-source capability.
- 64-bit elastic store for elimination of signal jitter.
- Limited Distance Modem (LDM) functionality.
- Loopback tests for local and remote DTE, local CSU and remote line loopback.

The T1 ESF DSU/CSU test capabilities are enhanced with a built-in bit error rate (BER) tester capable of transmitting six different test patterns. When used as a Limited Distance Modem, the T1 ESF DSU/CSU can support transmission distances of up to 1.8 km (6,000 feet).

DSU/CSU Product Configurations

Product	Facility	Speed	Interface (Supported) DTE	Version	Application
Multirate DSU/ CSU6	DDS or LDM	2.4 Kb/s to 56 Kb/s	V.35 EIA-232-D (up to 19.2 Kb/s)	Desktop	MUXserver, DECmux TransLAN DECrouters 250 and 2000
T1 CSU	T1 or LDM	1.544 Mb/s	DS-1	Desktop	TransLAN
T1 ESF DSU/CSU	T1 or LDM	1.544 Mb/s	V.35	Desktop	DECrouter 2000 TransLAN

Features

- Increased performance with high-speed throughput (up to 56 Kb/s on DDS and 1.544 Mb/s on T1).
- Limited Distance Modem (LDM) capability allows customer premise wiring.
- Elastic buffer provides jitter immunity.
- Automatic adaptive equalization compensates for cable lengths automatically.
- Built-in diagnostics help isolate network problems.

Ordering Information

DSU/CSU Order Codes

Option	Order Code
Multirate DSU/CSU, Desktop	DFD01-AA
T1 CSU, Desktop	DFD02-AA
T1 ESF DSU/CSU, Desktop	DFD03-AA
Power Supply (optional) with DFD02-AA	H7823-AA

The following table contains a partial list of the order codes and available lengths for cables required by the networking and communications products described in this catalog. Additional cables are listed in Section 2, "OPEN DECconnect Products." For information about custom cables and longer-length cables, contact the U.S. Direct Marketing Organization.

For more detailed information, refer to the *Open DECconnect Building Wiring Components and Applications* catalog, order number EC-11834-29

Communications Cable Order Codes

Order Code	Description	Where Used	Length
BC16C-10 BC16C-25	36-position, straight-to-right angle, male-to-male, shielded, 18 twisted-pair assembly	DECconnect, EIA-423-A Q-bus products	3.05 m (10 ft) 7.62 m (25 ft)
BC16D-10 BC16D-25 BC16D-50 BC16D-A5	36-position, right-angle, male-to-male, shielded, 18 twisted-pair extension cable	DECconnect, EIA-423-A Q-bus products	3.05 m (10 ft) 7.62 m (25 ft) 15.24 m (50 ft) 45.7 m (150 ft)
BC16E-02 BC16E-10 BC16E-25 BC16E-50	Terminated 6-conductor cable for terminal connection (Digital office cable)	DECconnect standard terminal connection cable	0.6 m (2 ft) 3.1 m (10 ft) 15.24 m (50 ft) 45.7 m (150 ft)
BC17C-10 BC17C-25 BC17C-35 BC17C-75 BC17C-B0 BC17C-B5	Full EIA-232-C/CCITT V.28 modem cable, round, 25-wire, fully shielded, male-to-female molded connectors	802.3/Ethernet Communications Servers (DCSAX-LA line cards)	3.1 m (10 ft) 7.6 m (25 ft) 10.7 m (35 ft) 22.9 m (75 ft) 61.0 m (200 ft) 76.2 m (250 ft)
BC17D-02 BC17D-10 BC17D-25 BC17D-50 BC17D-A0	EIA-232-C/CCITT V.28, fully shielded, null modem, 10-wire, female-to-female molded connectors	802.3/Ethernet Communications Servers (DCSAX-LB line cards)	0.6 m (2 ft) 3.1 m (10 ft) 7.6 m (25 ft) 15.2 m (50 ft) 30.5 m (100 ft)
BC17E-25 BC17E-A0 BC17E-A5 BC17E-B0 BC17E-B5	CCITT V.35, fully shielded, modem cable (Note: This cable has a EIA-449 connector on the CPU end, and a V.35 connector on the modem end.)	802.3/Ethernet Communications Servers (DCSAX-LB line cards) DMR	7.6 m (25 ft) 30.5 m (100 ft) 45.7 m (150 ft) 61.0 m (200 ft) 76.2 m (250 ft)
BC17L-04	EIA-232-C/CCITT V.28, fully shielded, male-to-female connectors adapter cable	802.3/Ethernet Communications Servers (DCSAX-LA or DCSAX-LC line cards)	1.22 m (4 ft)
BC22D-10 BC22D-25 BC22D-35 BC22D-50 BC22D-75 BC22D-A0 BC22D-A5 BC22D-B0 BC22D-B5	Null modem cable, round, 6-wire, fully shielded, EIA-232-C/CCITT V.28, female-to-female molded connectors	Local connection of asynchronous terminals	3.1 m (10 ft) 7.6 m (25 ft) 10.7 m (35 ft) 15.2 m (50 ft) 22.9 m (75 ft) 30.5 m (100 ft) 45.7 m (150 ft) 61.0 m (200 ft) 76.2 m (250 ft)

Communications Cable Order Codes (Continued)

Order Code	Description	Where Used	Length
BC22E-10 BC22E-25 BC22E-35 BC22E-50 BC22E-75 BC22E-A0 BC22E-A5 BC22E-B0 BC22E-B5	Modem cable, round, 16-wire, fully shielded, EIA-232-C/CCITT V.28, male-to-female molded connectors	Connection of asynchronous modems	3.1 m (10 ft) 7.6 m (25 ft) 10.7 m (35 ft) 15.2 m (50 ft) 22.9 m (75 ft) 30.5 m (100 ft) 45.7 m (150 ft) 61.0 m (200 ft) 76.2 m (250 ft)
BC22E-10 BC22E-25 BC22E-35 BC22E-50 BC22E-75 BC22E-A0 BC22E-A5 BC22E-B0 BC22E-B5	Full EIA-232-C/CCITT V.28 modem cable, round, 25-wire, fully shielded, male-to-female molded connectors	Connection of synchronous modems	3.1 m (10 ft) 7.6 m (25 ft) 10.7 m (35 ft) 15.2 m (50 ft) 22.9 m (75 ft) 30.5 m (100 ft) 45.7 m (150 ft) 61.0 m (200 ft) 76.2 m (250 ft)
BC22U-10 BC22U-25 BC22U-50	Full EIA-232-C/CCITT V.28 modem cable, D-subminiature connector, fully shielded, male-to-female molded connectors	KMV1A configuration in BA200 enclosure	3.1 m (10 ft) 7.6 m (25 ft) 15.2 m (50 ft)
BC22W-10 BC22W-25 BC22W-50	EIA-422/423 communications cable, 37-conductor, D-subminiature connector, fully shielded, molded connectors	KMV1A configuration in BA200 enclosure	3.1 m (10 ft) 7.6 m (25 ft) 15.2 m (50 ft)
BC23T-10 BC23T-25	ISDN communication cable ISO 8877 connector	DEC ISDN controller	3.1 m (10 ft) 7.6 m (25 ft)
BC55D-10 BC55D-25 BC55D-50	EIA-423-A/EIA-449 interface connectors	Connection of DMR, DMP, DMV options	3.1 m (10 ft) 7.6 m (25 ft) 15.2 m (50 ft)
BC55S-75 BC55S-A0 BC55S-B5 BC55S-E0 BC55S-L0 BC55S-YA	Integral modem, triaxial with BNC connectors	Connects fully shielded DMR, DMP, DMV options	22.9 m (75 ft) 30.5 m (100 ft) 76.2 m (250 ft) 152.4 m (500 ft) 304.9 m (1,000 ft) 1,067 m (3,500 ft)
BC55T-25 BC55T-50 BC55T-75 BC55T-A0 BC55T-B5 BC55T-E0 BC55T-L0 BC55T-YA	Integral modem, twinaxial with BNC connectors	Connects fully shielded DMR, DMP, DMV options	7.6 m (25 ft) 15.2 m (50 ft) 22.9 m (75 ft) 30.5 m (100 ft) 76.2 m (250 ft) 152.4 m (500 ft) 304.9 m (1,000 ft) 1,067 m (3,500 ft)

Communications Cable Order Codes (Continued)

Order Code	Description	Where Used	Length
BC56A-02	Male-to-male BC55S-to-BC55M adapter cable	Connects fully shielded DMR, DMP, DMV options to old options using CPC plastic connectors	0.6 m (2 ft)
BC56E-02	Male-to-female BC55T-to-BC55N adapter cable	Connects current fully shielded DMR, DMP, DMV options to old options using CPC plastic connectors	0.6 m (2 ft)
BN24G-01	8 MP × 8 MP, 8-conductor, 8-unshielded twisted-pair patch cable, pin-to-pin	For DECrepeater 350	1 m (0.3 ft)
BN24G-03	8 MP × 8 MP, 8-conductor, 8-unshielded twisted-pair patch cable, pin-to-pin	For DECrepeater 350	3 m (9.84 ft)
BN24G-04	8 MP × 8 MP, 8-conductor, 8-unshielded twisted-pair patch cable, pin-to-pin	For DECrepeater 350	4 m (13 ft)
BN25G-OE BN25G-01 BN25G-03 BN25G-04 BN25G-07	Level 5 Unshielded Twisted-Pair Office Cabling (100 Ohm) RJ-45 to RJ-45 Adapter Cable	Connecting personal computers and Q-bus VAX VMS Systems to the wall faceplates.	0.5m (1.6 ft) 1.0 m (3.3 ft) 3.0 m (9.8 ft) 4.0 m (13.1 ft) 7.0 m (23.0 ft)
BN25J-10 BN25J-20 BN25J-50 BN25J-A0 BN25J-B5 BN25J-E0	VCS FOSHA-AC/AD fiber optic cable	Connects DHF11 remote terminal concentrator to DHF11 controller	10 m (32.8 ft) 20 m (65.6 ft) 50 m (98.4 ft) 100 m (131.2 ft) 250 m (820 ft) 500 m (1,640 ft)
BN26G-03 BN26G-10 BN26G-30	Shielded Twisted-Pair Office Cabling DB-9 to 802.5 Adapter Cable	Connecting personal computers and Q-bus VAX VMS Systems to the wall faceplates. For DEQRA-CA Network Interface Card	3.0 m (9.8 ft) 10.0 m (32.8 ft) 30.0 m (98.4 ft)
BN27F-03 BN27F-10 BN27F-25 BN27F-50	Shielded Twisted-Pair Patch Cable 802.5 to 802.5 Network Patch Cable	Connecting personal computers and Q-bus VAX VMS Systems to the wall faceplates.	3.0 m (9.8 ft) 10.0 m (32.8 ft) 25.0 m (82.0 ft) 50.0 m (164.1 ft)
BN29L-03	Shielded Twisted-Pair Office Cabling DB-9 to 802.5 Adapter Cable	Connecting personal computers and Q-bus VAX VMS Systems to the wall faceplates. For ProNET-4/16 PC Network Interface Cards	3.0 m (9.8 ft)
BNE2A-MA BNE2A-MB BNE2A-MC BNE2A-ME	Plenum-rated coaxial cable	Standard 802.3/Ethernet cable (backbone)	23.4 m (76.8 ft) 70.2 m (230.3 ft) 117 m (383.9 ft) 500 m (1,640.4 ft)

Communications Cable Order Codes (Continued)

Order Code	Description	Where Used	Length
BNE2B-MA BNE2B-MB BNE2B-MC BNE2B-ME	PVC-insulated coaxial cable	Ethernet	23.4 m (76.8 ft) 70.2 m (230.3 ft) 117 m (383.9 ft) 500 m (1,640.4 ft)
BNE3A-05 BNE3A-10 BNE3A-20 BNE3A-40	PVC-insulated transceiver cable with straight connector	Ethernet	5 m (16.4 ft) 10 m (32.8 ft) 20 m (65.6 ft) 40 m (131.2 ft)
BNE3B-05 BNE3B-10 BNE3B-20 BNE3B-40	PVC-insulated transceiver cable with right-angle connector	Ethernet	5 m (16.4 ft) 10 m (32.8 ft) 20 m (65.6 ft) 40 m (131.2 ft)
BNE3H-05 BNE3H-10 BNE3H-20 BNE3H-40	PVC-insulated transceiver cable with straight connector	IEEE 802.3	5 m (16.4 ft) 10 m (32.8 ft) 20 m (65.6 ft) 40 m (131.2 ft)
BNE3K-05 BNE3K-10 BNE3K-20 BNE3K-40	PVC-insulated transceiver cable with right-angle connector	IEEE 802.3	5 m (16.4 ft) 10 m (32.8 ft) 20 m (65.6 ft) 40 m (131.2 ft)
BNE3L-05 BNE3L-10 BNE3L-20 BNE3L-40	Plenum-rated transceiver cable with straight connector	IEEE 802.3	5 m (16.4 ft) 10 m (32.8 ft) 20 m (65.6 ft) 40 m (131.2 ft)
BNE3M-05 BNE3M-10 BNE3M-20 BNE3M-40	Plenum-rated transceiver cable with right-angle connector	IEEE 802.3	5 m (16.4 ft) 10 m (32.8 ft) 20 m (65.6 ft) 40 m (131.2 ft)
BNE4C-02 BNE4C-05	Office transceiver cable with PVC insulation, straight connector	IEEE 802.3	2 m (6.6 ft) 5 m (16.4 ft)
BNE4D-02 BNE4D-05	Office transceiver cable with PVC insulation, right-angle connector	IEEE 802.3	2 m (6.6 ft) 5 m (16.4 ft)
H8243-A	PVC-insulated ThinWire cable spool	ThinWire 802.3/Ethernet products	300 m (1,000 ft)
H8244-A	Plenum-rated ThinWire cable spool	ThinWire 802.3/Ethernet products	300 m (1,000 ft)

5

Connectivity: Communications Software

This section contains the following topics:

Introduction and Software Ordering Information	5-1
DECnet OSI Communications Software	5-4
Digital Internet Communications Software	5-25
802.5/Token Ring Products	5-31
Digital to IBM Transport Products	5-62
DECnet SNA Access Routines and Programming Interfaces	5-88
IBM Interconnect Third-Party Solutions	5-116
Binary Synchronous Communications Protocol Emulators	5-120
Packetnet Communications Software	5-124
Open Systems Interconnection (OSI) Products	5-139
File Transfer and Terminal Emulation Products	5-146
Additional Software Products	5-149

Interoperability: Communications Software

Interoperability is the ability to exchange information between systems from the same vendor or from a collection of vendors, using different network protocols.

Digital's customers may choose DECnet, OSI, TCP/IP, and Packetnet protocols to exchange information and files, support multivendor equipment, and comply with industry standards. Also, Digital provides bidirectional communication with IBM databases and equipment.

The following Digital communications products, described in this section, facilitate interoperability.

- ADVANTAGE-NETWORKS communications software including
  - DECnet OSI for ULTRIX
  - TCP/IP services
  - OSI applications and services through DECnet VAX Extensions
  - DECnet Phase IV (providing interoperability over VMS, ULTRIX, MS-DOS, and OS/2 platforms)
- Internetwork communications software including IBM Interconnnect
- Packetnet communications software
- File transfer and terminal emulation products
- Additional Open Systems Interconnection (OSI) products

Software Ordering Information

The following software order code template provides information needed to order the major components of a software product: the licenses, distribution and documentation, and installation service.

For a given software product, the template is completed by providing the following codes:

- The Unique Product Identifier (UPI), a three-digit number assigned to each software product. The UPI replaces the "**xxx**" in the order code template, and can be found in this catalog at the end of each product description.
- The processor on which the software will run, as listed in the footnotes below the template. The processor code replaces the "*" in the order code template.
- The medium on which the software will be delivered, as listed in the footnotes below the template. The media code replaces the "#" in the order code template.

Note: A software product may not support all processors or all distribution media. Also, certain limitations might accompany each option; for example, a VAXcluster license might not be available for certain processors. The Software Product Description (SPD), available for each product, defines the capabilities and specific ordering information. The SPD number for each product is found in this catalog at the end of each product description.

Identifiers	
Option	**Order Code**
Software Category	
Licenses	QL
Media and documentation kits	QA
SPS services	QT
Packaged Software Components	
(License/kits/service)	QB
Language Identifier	
American English	A
Danish	D
British English	E
German	G
Dutch	H
Swedish	M
French	P
Spanish	S

Software Order Code Template	
Option	**Order Code**
Licenses (a license is required for each CPU)	
Single-use or first license for VAXcluster	QL-xxxA*-AA
Materials and Installation	
Distribution and documentation	QA-xxxAA-H#
Documentation only	QA-xxxAA-GZ
Installation service	QT-xxxA*-I#

Supported RISC Processors	
A = DECstation 2100/3100/ 3100S/5120/5125 /5133/5020/5025	S = DECsystem 5200/5240/5400/ 5500/5900
C = DECstation 5200/5240	2 = DECsystem 5810
D = DECsystem 5840	3 = DECsystem 5820
N = DECsystem 3100/5020/ 5025/5133/5100	4 = DECsystem 5830
	8 = RISC processor generic
	9 = Processor generic

Supported VAX Processors

B = MicroVAX 3500/3600/3800/3900, VAX 4200
C = VAXstation 3200/3500/8000/3100/3520/3540 VAXstation 4060/4VLC/4090, VAXserver 3500/3600/3602, VAXserver 3300/3400/3800/3900, VAXserver 4300/4200, VAXft 110/310/410/610 Server
D = VAX 6240/6340/6350/6420, VAX 8800/8820, VAX 6610, VAX 7610, VAX 10610, VAXserver 9320/9330/9340
E = VAX 8700/8550/8810
F = VAX 8600/8650
G = VAX 8530, VAXserver 6220/6320/6410/6420/6510/6520
H = VAX 8300/8350, VAXserver 6210/6310
J = VAX 8200/8250
K = VAX 780/785
L = VAX 750
M = VAX 730
N = MicroVAX II
P = MicroVAX 2000, MicroVAX 3100/3110e/3120e/3130/3140/3180/3190
Q = VAXstation II
R = VAXstation 2000, VAXserver 3100
S = MicroVAX 3300/3400, VAXft 110, VAX 4100
U = VAX 8830, VAX 6360/6430/6520/6620, VAX 7620, VAX 10620
V = VAX 8840/8974/8842, VAX 9210/9410, VAX 6440/6450/6460/6530/6540/6550/6560 VAX 6630/6640/6650/6660 VAX 7630/7640, VAX 10630/10640
W = PC software (includes VAXmate)
X = Multivendor processor
2 = VAX 6210/6310, VAX 4300/4400, VAXft 310/410/610
3 = VAX 6220/6320/6410
4 = VAX 6230/6330/6510, VAX 4500/4600, VAXserver 9110/9310
5 = VAX 8978, VAX 9420/9430/9440
8 = RISC processor generic
9 = Processor generic (cluster-wide base)

Media Type

3 = RX50 floppy diskette
4 = RC25 disk cartridge
5 = TK50 cartridge
6 = TK25 cartridge
7 = RX33 floppy diskette
8 = CD-ROM
9 = No media dependency
A = 6250 bits/in (bpi) magtape
B = RX24
C = RX23
D = 9-track 800 bits/in (bpi) magtape (NRZ1)
G = TU58 DECtape II cartridge
H = RL02 disk cartridge
I = RX31 floppy diskette
J = RA60 disk cartridge
M = 9-track 1,600 bits/in (bpi) magtape (PE)
P = QIC tape
R = Microfiche
V = RK07 disk cartridge
W = Multimedia distribution
Y = RX01 floppy diskette
Z = Paper

For example, to order a DECnet OSI for ULTRIX single-use license for the VAX 8350, replace the "**xxx**" in the template with the Unique Product Identifier (716), and the "*" with the VAX 8350 processor code (H). The order code is therefore QL-716AH-AA. To order the software distributed on magtape, specify order code QA-716AH-IM, where "M" designates magtape.

Introduction

The next generation of DECnet communications software has arrived! ADVANTAGE-NETWORKS is a family of networking products designed to provide end users with multivendor and multiprotocol interoperability. ADVANTAGE-NETWORKS includes DECnet, OSI, and TCP/IP communications software, and provides backwards compatibility to DECnet Phase IV. The ADVANTAGE-NETWORKS product family includes:

- DECnet/OSI for ULTRIX
- DECnet/OSI for VMS
- Extensions to DECnet-VAX V5.4
- Multiprotocol routers and servers
- ULTRIX TCP/IP
- DEC TCP/IP Services for VMS V2.0
- OSI Application Developer's Toolkit

DECnet/OSI products continue to give network owners flexibility in developing large and cost-effective computer networks, with the ability to extend their current networks as their needs evolve.

The ADVANTAGE-NETWORKS program is the integration of OSI, TCP/IP, and DECnet protocols, and is the basis of Digital networking for the 1990s. ADVANTAGE-NETWORKS has three main goals:

- Multivendor connectivity through the use of OSI and TCP/IP protocols
- Removal of addressing limitations for the support of computer networks with millions of nodes
- Management of very small to very large multivendor networks using a network management entity model that is modular and extensible

ADVANTAGE-NETWORKS open standards-based networks provide the stability and openness required by multivendor environments. These ingredients allow the customer to build powerful networking applications on a consistent network infrastructure.

ADVANTAGE-NETWORKS Architecture

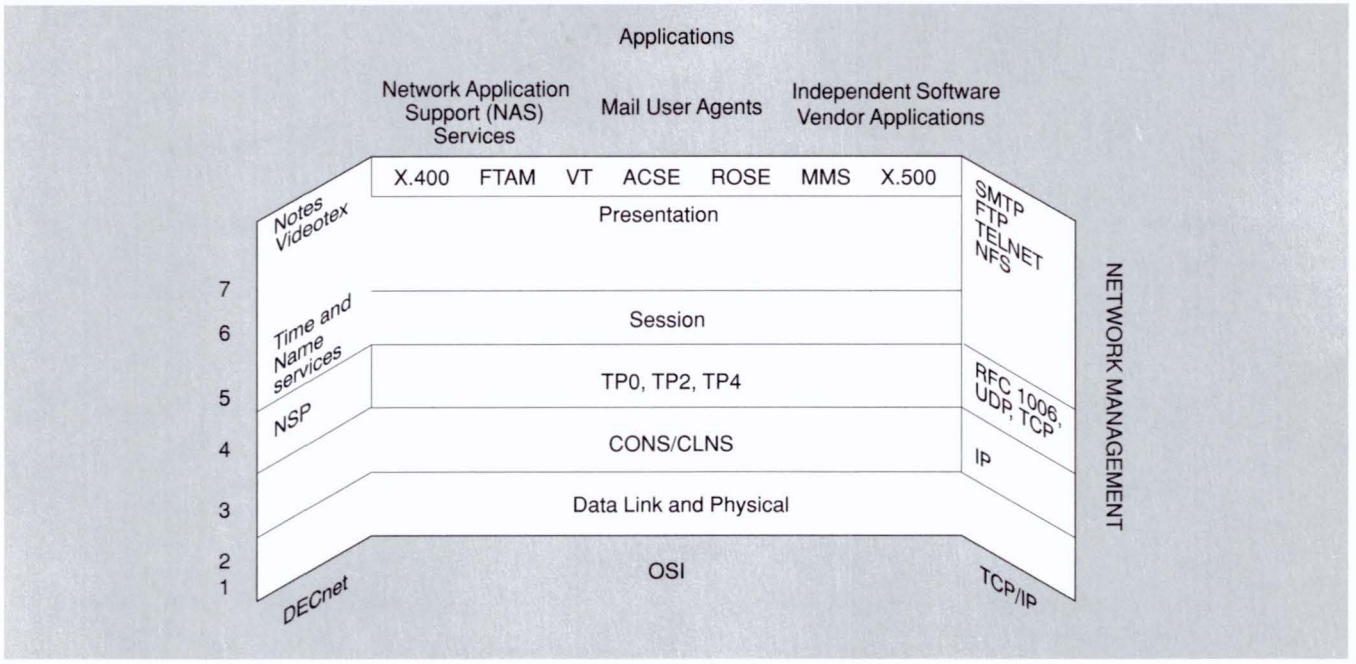

TBG-139–01

Features

- Wide area and local area network options allow the customer to choose the most appropriate and cost-effective communications network configuration.
- Multiprotocol support supplies a richness of functions and applications.
- With ADVANTAGE-NETWORKS, Enterprise Management Architecture (EMA) supplies a simple, consistent view of management for small and large networks in both a modular and expandable format.
- Value-added technologies such as Digital's Distributed Name Service (DECdns) and the Digital Distributed Time Service (DECdts) lower the cost of network administration.
- OSI-based network applications provide interoperability in the global network environment.

Digital offers two packages for general purpose DECnet systems: full-function and end-node. The full-function package includes routing capability. The end-node package offers full DECnet capability with the exception of the routing function. DECnet/OSI for general purpose systems is currently available in the end-node package only.

Using an end-node package, data can originate and terminate at this node, but data destined for other nodes cannot transit this node. End-nodes access DECnet routers, X.25 gateways, or full-function nodes to send messages beyond the local area network. An end-node does not impose the overhead needed for routing, thus increasing application performance.

ADVANTAGE-NETWORK Configuration

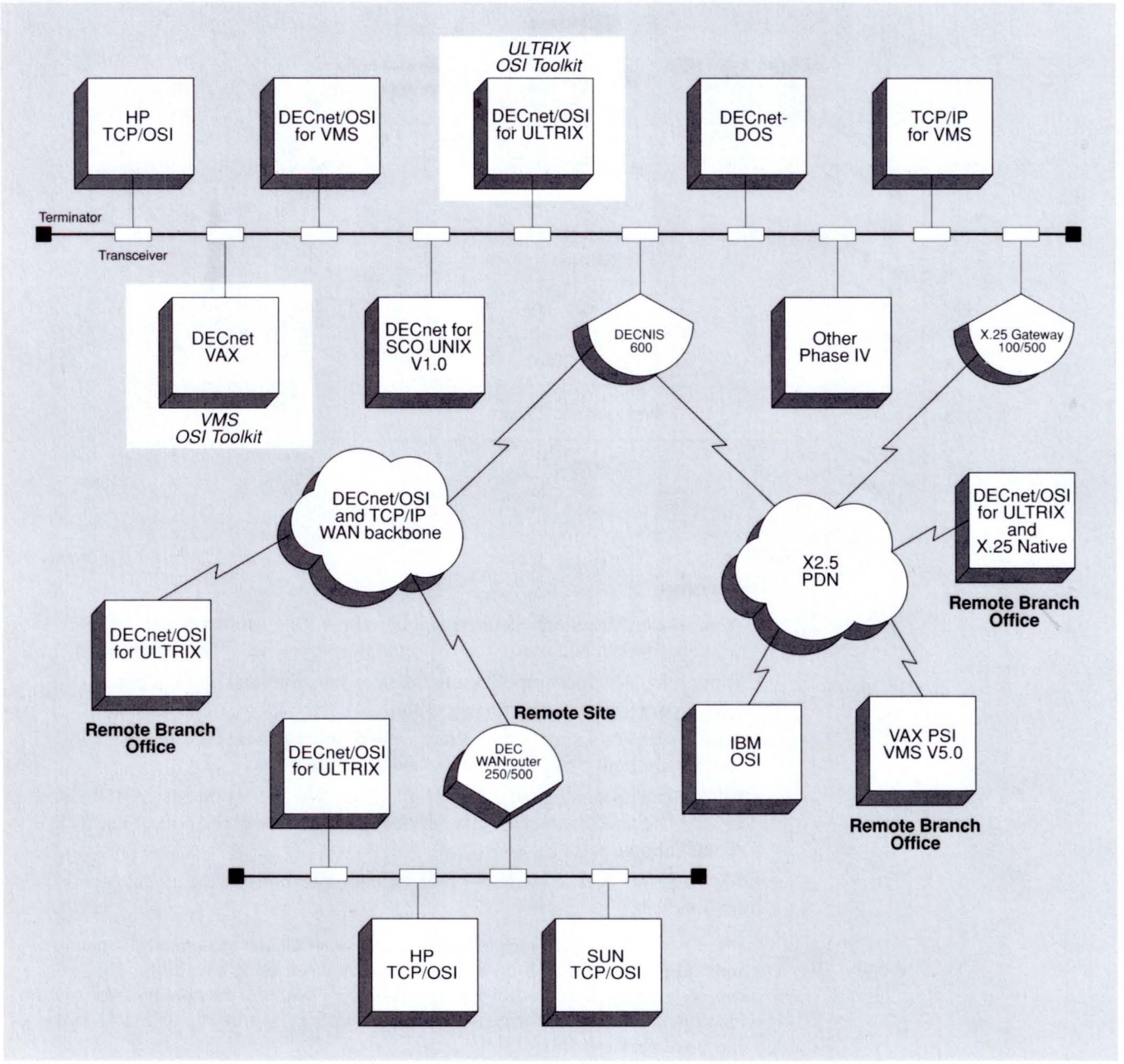

TBG-190-00

The following table shows which DECnet products support full-function and end-node ADVANTAGE-NETWORKS and Phase IV packages, and which continue to support Phase III.

DECnet Packaging Support

DECnet Product	DECnet/OSI	Phase IV Full-Function	Phase IV End-Node	Phase III
DECnet-VAX		•	•	
DECnet-VAX V5.4 Extensions	•	•	•	
DECnet/OSI for VMS (end-node only)	•			
DECnet/OSI for ULTRIX	•			
DECnet for SCO UNIX			•	
DECnet-DOS (included with PATHWORKS for DOS)			•	
DECnet for OS/2 (included with PATHWORKS for OS/2)			•	
DECnet 11M		•	•	
DECnet 11M-PLUS		•	•	
DECnet-MicroRSX		•		
DECnet 11S		•	•	
DECnet-RT (end-node only)				•
DECnet/E		•		

DECnet/OSI Product Capabilities

Each DECnet/OSI software product offers a particular set of capabilities that is summarized in the *DECnet Product Capabilities* table.

Intrinsic DECnet/OSI Functions

- Program-to-program communication means that cooperating programs, including those running under different operating systems and written in different languages, can exchange data.
- Virtual terminal capability allows users on a host system to log onto other systems in the network (supporting the Virtual Terminal Protocol) as though their terminals were directly connected to the other system.
- File transfer allows users to exchange files among systems in a network.
- Command/batch file submission and execution means that a user at a source node can request a destination node to execute a command file. The command file can already be at the destination node, or the source node can send it along with the request.
- Remote resource access allows the sharing of such resources as expensive peripheral devices and massive database files for reasons of economy and convenience. This capability is sometimes referred to as "remote file access" when programs access file-structured devices remotely. DECnet offers both remote file and remote record access.
- Downline system loading is the ability to store initial memory images for a server system on a host. These images can then be loaded on request into adjacent server systems on the network.
- Downline task loading is the ability of a host to store programs that are to be executed on another system or server. These programs are then loaded on request into adjacent systems or servers on the network, under joint control at both ends of the logical link.
- Upline dumping is the capability of a system or server to automatically send a system-image dump to an adjacent node if the system or server fails.
- CCITT X.25 Access is the ability to access an X.25 service.

Additional DECnet/OSI Functions

- SNA Access is the ability to access an IBM SNA network.
- BISYNC Access is the ability to support the IBM binary synchronous communications protocol between Digital and IBM systems.

DECnet Product Capabilities

Capability	DECnet -RT	DECnet-MicroRSX, RSX-11M, RSX-11M-PLUS	DECnet RSX-11S	DECnet /E	DECnet-VAX Extensions	DECnet/OSI for VMS	DECnet/OSI for ULTRIX	DECnet for SCO UNIX	DECnet -DOS	DECnet OS/2
Intrinsic Functions										
Program-to-Program Communications	•	•	•	•	•	•	•	•	•	•
Network Command Terminal	•[1]	•[1]	•[2]	•[1]	•[1]	•[3]	•[3]	•[3]	•[1,2]	•[1]
File Transfer	•[4]	•[4]		•[4]	•[5]	•[5]	•[5]	•	•[4]	•[4]
Command/Batch File Submission and Execution	•[2]	•	•	•	•[6]	•	•	•	•[2]	•
Remote Resource Access	•	•	•[2,7]	•	•	•	•	•	•	•
Downline System Loading		•			•	•	•[6]	•		•[8]
Downline Task Loading		•			•	•				•[8]
Upline Dumping		•	•		•	•	•[6]	•		•[8]
CCITT X.25 Access		•[9]			•	•	•			
Additional Functions										
SNA Access					•	•	•	•	•	•
BISYNC Access		•			•					

[1]Supports CTERM
[2]Requester-only function; does not support connection from remote command terminals.
[3]Supports CTERM and VT
[4]Supports DAP
[5]Supports DAP and FTAM.
[6]Command file must reside on remote node.
[7]Local system supports unit-record equipment only.
[8]Refer to the Software Product Description for details.
[9]Support for RSX-11M and RSX-11M-PLUS.

DECnet-VAX

This Phase IV implementation allows a suitably configured VMS system to participate as a full-function (routing) or end-node in DECnet computer networks. With proper network planning, DECnet-VAX networks can contain up to 1,023 nodes per network area, and up to 63 areas per network. DECnet-VAX interfaces are standard components of the VMS operating system for use on a local, standalone system.

The DECnet-VAX end-node and full-function products are licensed separately for VMS. The DECnet-VAX License Product Authorization Key (PAK), when registered on a VMS system, enables communication between different networked systems that use the same protocols.

DECnet-VAX offers task-to-task communications, file management, downline system and task loading, network command terminals, and network resource-sharing capabilities using the Digital Network Architecture (DNA) protocols. DECnet-VAX communicates with adjacent and non-adjacent Phase III, Phase IV, and DECnet/OSI nodes. (Adjacent nodes are one hop away connected by a single communications line.)

VMS programs written in VAX MACRO and native mode high-level languages can use DECnet-VAX capabilities.

Network functions available to DECnet-VAX users depend in part on the network configuration. Networks consisting entirely of DECnet-VAX Phase IV nodes provide all the functions described in the DECnet-VAX Software Product Description.

Networks that combine different DECnet implementations may limit the functions available to the DECnet-VAX user on other VAX nodes (because other DECnet implementations may not implement the functions). Conversely, a user of another DECnet implementation may not be able to access all DECnet-VAX functions. Functions available on mixed networks can be determined by comparing the Software Product Descriptions for the appropriate DECnet products.

DECnet-VAX allows multiple 802.3/Ethernet controllers per host within the limitations listed in the Load Unit table in Software Product Description 25.03. When two or more 802.3/Ethernet controllers are used on a single CPU, each controller must be connected to a different 802.3/Ethernet cable. These cables must not be joined by a bridge or repeater, though they can be joined by a DECnet router.

Ordering Information

Order the license for either the end-node or full-function version. A license is also available to upgrade an end-node to a full-function node.

No media kit is required for DECnet-VAX V5.0, as DECnet-VAX is included in the VMS V5.0 Media and Documentation kit. A DECnet-VAX license PAK must be installed on each node.

As of V5.0 of DECnet-VAX, the VAX-11/782 is no longer supported. ▲ Refer to the following sources for information on prerequisite hardware and software:

- Software Product Description 25.03
- Unique Product Identifier D04

DECnet-VAX V5.4 Extensions

DECnet-VAX Extensions include new capabilities under the DECnet-VAX license. These additional services provide an OSI End System stack (coresident with the DECnet Phase IV stack), and DECnet enhancements that include

- Optional use of the DEC Distributed Name Service (DECdns) to manage the network node names and addresses
- DEC Distributed Time Service (DECdts) to synchronize time among distributed systems.
- ADVANTAGE-NETWORKS management of the OSI layers and remote ADVANTAGE-NETWORKS systems, multiprotocol routers and gateways

This release provides a transition path to ADVANTAGE-NETWORKS and enhances the OSI support of DECnet-VAX by providing support for the Government OSI Profiles (GOSIPs).

The OSI components included in this release are: FTAM, the Upper Layers (OSI Applications Kernel — OSAK), Transport (VAX OSI Transport Service — VOTS), X.25 (VAX Packetnet System Interface [P.S.I.] Access), and the Wide Area Network Device Drivers (WANDD). These components provide the following updated capabilities of the currently available OSI products:

- **FTAM** provides OSI File Transfer, Access, and Management permitting access to files on an open system with new two-way communications between DECnet DAP and FTAM protocols, and support for Restart/Recovery.
- **OSAK** provides the OSI Upper Layers. It includes support for the Application Layer (with Association Control Service Element [ACSE]), the Presentation Layer, and access to the Session Layer support.
- **VOTS** provides the Transport Layer with support for Transport Classes 0, 2, 4, and new support for the use of End System to Intermediate System (ES-IS) routing.
- **P.S.I. Access and WAN Device Drivers** provide support for X.25 and wide area data links. P.S.I. Access provides access to an X.25 network via either an X.25 gateway or VAX P.S.I. (multihost). VAX Wide Area Device Drivers provide synchronous communications drivers that provide data link protocol support for several communication drivers. The DECnet-VAX Extensions kit also includes VAX P.S.I. functionality that supports X.25 over the LAN using the ISO LLC2 protocol, for which a separate VAX P.S.I. license is required.

Together with the Message Router X.400 Gateway product, these components provide the OSI capabilities required by the Government OSI Profiles (GOSIPs) for local area networks, and for wide area networks with the addition of either DEC X25gateway 100/500: a VAX P.S.I. system over CONS; or a DEC WANrouter over CLNS. A DEC X25router 2000 can be used but does not offer GOSIP (LLC2) support.

The DECnet components in the Extensions kit provide the optional use of the Distributed Name Service (DECdns) namespace for the nodes list along with the DECdns and DECdts clerks and node name management tools to populate the namespace with the DECnet nodes. Use of DECdns requires the purchase of a license and installation of the DECdns Server in the network. Use of the Distributed Time Service is optional and requires the installation of the DECdts Server (licensed with DECnet-VAX) in the network. Also included are the Ethernet Device Drivers with ADVANTAGE-NETWORKS management support.

The ADVANTAGE-NETWORKS management components provide the new Network Control Language (NCL), the Common Trace Facility (CTF), the Event Dispatcher (EVD), CMIP Management Listener (CML), management tools required to manage the DEC WANrouters and DEC X25gateways, and transition tools to support the migration from DECnet Phase IV to DECnet/OSI.

Features

- OSI components are included in the DECnet-VAX license.
- A full 7-layer OSI stack is available so that applications can be written to the OSI Upper Layer APIs (using the OSI Application Developers Toolkit).
- Supports customers in their transition to ADVANTAGE-NETWORKS by providing early adoption of DECdns node namespace, and management of ADVANTAGE-NETWORKS components.

Prerequisite Hardware

VAX, VAXstation, or VAXserver configuration as specified in the DECnet-VAX SSA 25.03.xx-A

Prerequisite Software

VMS operating system V5.4 or later

Optional Software

VAX Distributed Name Service V1.1

Ordering Information

DECnet-VAX continues to be included in the VMS Hkit. The DECnet-VAX Extensions are made available in an additional Hkit. The previous FTAM and OSAK products were superseded by the DECnet-VAX Extensions. Customers who have a DECnet-VAX license have the right to use the DECnet-VAX Extensions.

DECnet-VAX Order Codes

Option	Order Code
DECnet-VAX license	
End system	QL-D04A*-AA
Full-function	QL-D05A*-AA
EN-FF upgrade	QL-D09A*-AA
DECnet-VAX kit	Included with VMS
DECnet-VAX Extensions kit	QA-D04AB-H#
Extensions Programming documentation	QA-D04AC-GZ
Extensions X.25 additional documentation	QA-D04AD-GZ

*Processor code

#5 = TK50, M = magtape

▲ Refer to the following sources for further information on the supported processor and services:

- Software Product Description 29.03
- Unique Product Identifier D04, D05, D09

DECnet/OSI for VMS V5.5

DECnet/OSI for VMS implements both OSI and DECnet protocols for VMS systems and supersedes DECnet-VAX. It provides support for multivendor connectivity, larger networks, and EMA-based network management products. DECnet/OSI for VMS also supports backward compatibility with DECnet Phase IV implementations, transition tools (for Phase IV to DECnet/OSI), and an integrated naming service for object names and address resolution.

For small networks (less than 100 nodes), a local naming option is provided as an alternative to the DECdns server.

This release features GOSIP compliant OSI components, FDDI support, DECdns (including support for the local naming option) and DECdts.

The OSI components provided in DECnet/OSI for VMS include: FTAM, VT, the Upper Layers (OSI Applications Kernel — OSAK), Transport (VAX OSI Transport Service — VOTS), X.25 (VAX Packetnet System Interface [P.S.I.] Access), and the Wide Area Network Device Drivers (WANDD). These components provide the following updated capabilities:

- **FTAM** provides the OSI File Transfer, Access, and Management permitting access to files on an open system with new two-way communications between DECnet DAP and FTAM protocols, and support for Restart/Recovery.
- **VT** provides the OSI Virtual Terminal services that allow users to log on to any remote system supporting VT and allows remote users to log on to the local system.
- **OSAK** provides the OSI Upper Layers. It includes support for the Application Layer (with Association Control Service Element [ACSE]), the Presentation Layer, and access to the Session Layer support.
- **VOTS** provides the Transport Layer with support for Transport Classes 0, 2, 4, and the use of End System to Intermediate System (ES-IS) routing.
- **P.S.I. Access, P.S.I. (LLC2), and WAN Device Drivers** provide support for X.25 and wide area data links. P.S.I. Access provides access to an X.25 network via either an X.25 gateway or VAX P.S.I. (multihost). P.S.I. supports ISO LLC2 internetworking over a local area hetwork. VAX Wide Area Device Drivers provide synchronous communications drivers that provide data link protocol support for several communication drivers. A separate license is required to run P.S.I. over a WAN.

Together with Digital's X.400 products, these components provide the OSI capabilities required by the Government OSI Profiles (GOSIPs) for local area networks, and for wide area networks with the addition of either DEC X25gateway 100/500: a VAX P.S.I. system over CONS; or a DEC WANrouter over CLNS. A DEC X25router 2000 can be used but does not offer GOSIP (LLC2) support.

DECnet/OSI for VMS contains the network-wide naimg and time services: the Digital Distributed Naming Service (DECdns), and Digital Distributed Time Service (DECdts). DECdns provides a consistent, globally accessible directory of network resources, and makes it possible to use a resource without knowing its physical location in the network. DECdts provides a well-integrated means of synchronizing time among distributed systems. It permits the coordination of distributed computing functions such as name service operations, event logging, error recovery, and distributed applications. Such functions need synchronized time to ascertain the order of events, compute the interval between two time readings, and schedule events.

The ADVANTAGE-NETWORKS management components provide the new Network Control Language (NCL), the Common Trace Facility (CTF), the Event Dispatcher (EVD), CMIP Management Listener (CML), management tools required to manage the DEC WANrouters and DEC X25gateways, and transition tools to support the migration from DECnet Phase IV to DECnet/OSI.

DECnet/OSI for VMS is available under two licenses: End System (UPI D04) and Extended Function (UPI D05). The Extended Function License provides

- DECdns server
- Cluster alias support
- OSI Application Gateways (including DAP-FTAM and CTERM-VTP).

Note: Host-based routing is not available with DECnet/OSI. A DECNIS 500 or other appropriate router can be used.

Features

- GOSIP conformance.
- A full 7-layer OSI stack is available so that applications can be written to the OSI Upper Layer APIs (using the toolkit).
- Supports increased network size through the use of ISO addressing
- New support for FDDI.

Prerequisite Hardware

VAX, VAXstation, or VAXserver configuration as specified in the DECnet-VAX SSA 25.03.xx-A

Prerequisite Software

VMS operating system V5.5 or later

Optional Software

VAX Distributed Name Service V1.1

Ordering Information

Note that DECnet/OSI for VMS is provided as a layered product with its own media and documentation kit (not on the VMS kit).

DECnet-OSI for VMS Order Codes	
Option	**Order Code**
DECnet-OSI for VMS license	
End system	QL-D04A*-AA
Extended Function	QL-D05A*-AA
ES-EF upgrade	QL-D09A*-AA
DECnet/OSI for VMS kit	QA-D04AA-H#
*Processor code	
#5 = TK50, M = magtape	

▲ Refer to the following sources for further information on the supported processor and services:

- Software Product Description 29.03
- Unique Product Identifier D04, D05, D09

DECnet with VAXELN

The VAXELN toolkit is a VMS layered product used for the development of dedicated realtime VAXELN systems that run on VAX and MicroVAX processors. The development tools run on any host VAX computer under VMS or MicroVMS operating systems. A finished VAXELN system runs directly on a supported runtime target VAX or MicroVAX processor without the presence of another operating system.

VAXELN is especially suited to, although not limited to, creating realtime applications; that is, applications in which the system's response (both speed and predictability) to external events is critical.

The VAXELN Network System is responsible for providing transparent network message transmissions between CSMA/CD LAN (IEEE 802.3/Ethernet) nodes. The Network Service uses the Phase IV DECnet Routing Protocol V2.0, to route system-level datagrams between VAXELN nodes and other DECnet nodes (only end-node functionality is provided). The VAXELN system can communicate over the CSMA/CD LAN with any DECnet node on the same LAN. If there is a full routing system on the LAN, VAXELN can communicate with any other DECnet node in the entire network. The VAXELN CSMA/CD LAN driver will support multiple controllers of the same type simultaneously. At any given time, DECnet can run on only one controller. Other CSMA/CD LAN protocols can be implemented on the other controllers. VAXELN supports the dynamic enabling and disabling of DECnet. In the event of hardware failure, this feature can be used to dynamically disable DECnet on one controller, followed by enabling DECnet on another controller. Downline loading over the CSMA/CD LAN of a VAXELN system image, from a VAXELN load host to a VAXELN target, is supported.

The Phase IV DECnet Network Services Protocol (NSP) V4.0, and the Session Control Protocol V1.0, are used to provide transparent application-level circuits with remote nodes. The Network Services' NSP module then uses the Routing Protocol to deliver messages to remote systems.

VAXELN DECnet nodes can be managed from VMS with the DECnet-VAX Network Control Program (NCP). The Network Service supports the Phase IV Network Management Protocol V4.0 Subset.

The optional VAXELN Authorization Service maintains a database of all the users authorized to use a particular VAXELN system or network of systems, and is compatible with standard FILES-11 protection and security features.

LAT host services allow VAXELN targets to communicate with devices attached to terminal servers. These services include terminal server communication, terminal I/O, and a control interface for application programs plus an interactive utility, which can be used to control and monitor a LAT environment.

Toolkit Communication Features

- VAXELN Network Service
- VAXELN Authorization Service
- VAXELN LAT Service
- VAXELN Set Host

DECnet with VAXELN Supported Ethernet Controllers

- DELQA Ethernet-to-Q22 adapter
- DEQNA Ethernet-to-Q22 adapter
- DESQA thick wire/ThinWire Ethernet-to-Q22 adapter
- DEUNA or DELUA UNIBUS-to-Ethernet adapter
- DEBNA Ethernet-to-VAXBI adapter
- DEC LANcontroller 200 (DEBNI) high-performance VAXBI Ethernet controller
- DEC LANcontroller 400 (DEMNA) Ethernet-to-XMI adapter

Prerequisite Hardware

VAX, MicroVAX, or VAXstation configuration as specified in the System Support Addendum (SSA) 28.02.12-A

Prerequisite Software

For Host Development System:

- VMS operating system or MicroVMS operating system
- Refer to the System Support Addendum 28.02.11-x for availability and required versions of prerequisite/optional software

Ordering Information

Refer to the following sources for further information about the VAXELN toolkit:

- Software Product Description 28.02.12
- System Support Addendum 28.02.12-A
- Unique Product Identifier 375

For the VAXELN Run-Time System:

- Unique Product Identifier 376

DECnet/OSI for ULTRIX V5.1

DECnet/OSI for ULTRIX implements both OSI and DECnet protocols for Digital's ULTRIX operating system. It provides support for multivendor connectivity, larger networks, and the EMA-based network management products. DECnet/OSI for ULTRIX also supports backwards compatibility with DECnet Phase IV implementations, transition tools (for Phase IV to DECnet/OSI), and an integrated naming service for object names and address resolution.

This new U.S. and U.K. GOSIP compliant release of DECnet/OSI for ULTRIX software features: greater wide-area connectivity via OSI protocols, new media support for FDDI, FTAM support, Virtual Terminal (VT) support, greater OSI and TCP/IP interoperability due to inclusion of INTERNET standard RFC1006, DECdns, local naming option, DECdts, OSI transport over CONS/X.25 and CLNS/X.25 via X.25 client gateways and native software, and CONS/LAN (LLC2) via WAN device drivers.

The FTAM feature provides OSI File Transfer, Access, and Management permitting access to files on other systems running FTAM. Also included is an applications gateway between FTAM and FTP, the INTERNET file transfer application.

Virtual terminal (VT) protocols allow you to connect to open systems and allows other open systems to connect to you. VT provides remote login capabilities between OSI systems and DECnet/OSI for ULTRIX systems. Also included are application gateways VT/Telnet, VT/CTERM, and LAT/VT.

INTERNET standard RFC1006 allows OSI applications to run over TCP/IP.

DECnet/OSI for ULTRIX contains new network-wide services: the Digital Distributed Naming Service (DECdns), and Digital Distributed Time Service (DECdts). DECdns provides a consistent, globally-accessible directory of network resources, and makes it possible to use a resource without knowing its physical location in the network. DECdts provides a well-integrated means of synchronizing time among distributed systems. It permits the coordination of distributed computing functions such as name service operations, event logging, error recovery, and distributed applications. Such functions need synchronized time to ascertain the order of events, compute the interval between two time readings, and schedule events.

Very small DECnet/OSI networks can choose the local naming option. With this option, no DECdns servers are installed in the network. Instead, a local file containing system names and addresses is copied to each system in the network.

X.25 Gateway Client provides access to an X.25 network through an X.25 connector node via the Gateway Access Protocol (GAP); X.25 Native Mode access to an X.25 connector node via LLC2. IP over X.25 (RFC877) is supported.

WAN Device Drivers provide synchronous communications drivers that provide data link protocol support for ULTRIX system communication devices.

Features

- Incorporates the Distributed Name Service (DECdns) for object name and address resolution and the Distributed Time Service (DECdts) for synchronizing time among distributed systems. For small networks (less than 100 nodes), a local naming option is provided as an alternative to the DECdns server.
- Enables Digital systems to participate in multivendor networks that adhere to the Open Systems Interconnection (OSI) specifications as defined by the International Standards Organization (ISO) and/or TCP/IP protocols, adhering to the RFCs published by the INTERNET Activities Board (IAB).
- Supports increased network size through the use of the ISO addressing capability.
- Provides the ability to manage very small to very large multivendor networks through the use of a network management entity model that is modular and extensible.
- Provides local area and wide area network configuration support.
- Incorporates network management features that are modular and expandable providing a simple, consistent view of management for small and large networks.
- New network support for FDDI.
- Support of OSI applications FTAM and Virtual Terminal (VT).

Prerequisite Hardware

VAX, MicroVAX, VAXstation, VAXserver Digital RISC system configuration as specified in the SSA 34.97.02-A

Prerequisite Software

For VAX, MicroVAX, DECstation 3100S, DECsystems: ULTRIX operating system V4.2 A

For VAXstations and DECstation systems: ULTRIX Worksystem software V4.2 A

Ordering Information

DECnet/OSI for ULTRIX Order Codes	
Option	**Order Code**
DECnet/OSI for ULTRIX media and documentation kit for VAX	QA-716AA-H#
DECnet/OSI for ULTRIX license for VAX V5.1	QL-716A*-AA
DECnet/OSI for ULTRIX media and documentation kit for RISC	QA-YT9AA-H#
DECnet/OSI for ULTRIX license for RISC V5.1	QL-YT9A*-AA
Optional Software	
X.25 Client software media and documentation kit for VAX	QA-YTBAA-H#
X.25 Native software media and documentation kit for VAX	QA-YSZAA-H#
WAN Device Drivers software media and documentation kit for VAX	QA-YMKAA-H#
X.25 Client software media and documentation kit for RISC	QA-YTAAA-H#
X.25 Native software media and documentation kit for RISC	QA-YSYAA-H#
WAN Device Drivers software media and documentation kit for RISC	QA-YMJAA-H#
*Processor code	
#5 = TK50, M = magtape	

▲ Refer to the following sources for further information on supported processors and services:

- Software Product Description 34.97.02
- Unique Product Identifier 716, YT9 (RISC)

DECnet for SCO UNIX V1.1

DECnet for SCO UNIX V1.1 is a Phase IV end-node implementation of the Digital Network Architecture (DNA) for the SCO UNIX System V/386 Release 3.2.2 and Open Desktop (ODT) V1.0 and V1.1 operating systems for Intel 386/486-based systems. DECnet for SCO UNIX delivers the basic network to SCO UNIX clients. SCO UNIX users will be able to participate as full peers in new and existing DECnet networks. DECnet for SCO UNIX V1.1 can interoperate with existing Phase IV nodes as well as DECnet/OSI for ULTRIX and DECnet/OSI for VAX products.

Features

- Phase IV end-node — DECnet for SCO UNIX software is a Phase IV end-node-only implementation, and as such, can communicate directly with any other Phase IV node on the Ethernet or with any other Phase IV node in the network via a routing node on the same Ethernet.
- Easy installation procedure — DECnet is installed using the standard CUSTOM utility on SCO UNIX. The interactive procedures guide the user through installation with a series of questions: prompted for network node name, address, and type of network connection; default values for other options are supplied.
- DECnet and TCP/IP coexistence — DECnet and TCP/IP can share the same system resources such as the Digital EtherWORKS family of PC Ethernet Controller Cards.
- Network Virtual Terminal — The Dlogin utility provides VT100 terminal emulation via CTERM. Dlogin provides remote access from other DECnet Phase IV systems to a SCO UNIX system via CTERM.
- Network File Transfer (NFT) — NFT allows users to transfer files between DECnet for SCO UNIX nodes and other DECnet Phase IV nodes. This utility supports both ASCII and Binary files and is bidirectional.
- Network File Access (FAL) — FAL allows users to access files on a SCO UNIX system from a remote DECnet node.
- Mail — The DECnet for SCO UNIX mail utility extends SCO UNIX and Open Desktop mail system to include support for DECnet.
- Network Management — Network Managment uses NCP to provide for local or remote execution of the following functions: displaying statistical and error information; controlling network components, and testing network operation.
- Downline load and upline dump.
- Task-to-task communications.
- Communications protocols — DECnet for SCO UNIX supports Ethernet V2.0.

Prerequisite Hardware

DECnet for SCO UNIX V1.1 requires a supported system with an Intel 80386 or 80486 processor with 8 MB of memory and one of the following Ethernet controller cards: Digital EtherWORKS, 3COM 3C503, or Western Digital WD8003E.

Prerequisite Software

SCO UNIX system V/386 Release 3.2.2 or Open Desktop Release V1.0 or V1.1

Ordering Information

DECnet for SCO UNIX Order Codes	
Option	**Order Code**
DECnet for SCO UNIX license	QL-GJ7AW-AA
Media and documentation kit	QA-GJ7AA-H#
Programmers Library	QA-GJ7AB-H#
#C = RX23, 7 = RX33	

▲ Refer to the following sources for further information on supported processors and services:

- Software Product Description 34.21.01
- Unique Product Identifier GJ7

DECnet RSX

DECnet RSX allows a suitably configured PDP-11 running the RSX operating system to participate as a Phase IV node in a DECnet network. The functions available to a user partially depend on the configuration of the rest of the network. DECnet-MicroRSX functions as an end-node only.

Features of DECnet RSX include network terminal, file transfer, remote resource access, downline loading, and upline dumping.

Ordering Information

▲ For prerequisite hardware and software, consult the following Software Product Description (SPD) and Unique Product Identifier (UPI) under each particular software package:

- DECnet 11M
  - SPD 10.75.00
  - UPI 764 (full-function), 765 (end-node)
- DECnet 11S
  - SPD 10.74.00
  - UPI 762 (full-function), 763 (end-node)
- DECnet 11M-PLUS
  - SPD 10.66.00
  - UPI 766 (full-function), 767 (end-node)
- DECnet-Micro/RSX
  - SPD 18.27.00
  - UPI 766

DECnet-DOS

DECnet-DOS, a component of PATHWORKS for DOS, allows IBM PC/XT/ATs, AT-compatible PCs, and PS/2 models to participate as nonrouting (end-) nodes in DECnet local area and wide area networks.

DECnet-DOS supports the following 802.3/Ethernet communications controllers:

- Digital — DEC EtherWORKS multibuffered 802.3/Ethernet controllers
- 3COM — 3COM, 3C503, and 3C523

DECnet-DOS nodes that use the DEC EtherWORKS controllers are supported in a broadband environment using the Chipcom Ethermodems.

Features

- Supports task-to-task communications, remote file access, utilities for network file operations, and network resource sharing using DNA protocols.
- Provides NETBIOS session-level interface, which allows NETBIOS applications to be layered on DECnet-DOS. These applications can communicate with other DECnet applications or with other PCs running DECnet and NETBIOS application.
- Supports virtual command terminals (VT220 emulation) and a scripting language.
- Allows access to full DECnet-DOS functions for MS-DOS user programs written in MACRO assembler or the C language.
- Provides SETHOST 132-column support for Digital national character sets and Digital multinational character sets.
- Supports IBM enhanced keyboards for IBM PC/XT/AT, and Digital LK250.
- Allows for remote network monitoring of DECnet-DOS nodes.

Prerequisite Hardware

▲ Refer to Software Product Description 55.07 for configuration details.

Prerequisite Software

IBM PC DOS or vendor's variant of MS-DOS

Ordering Information

▲ Refer to the following sources for specifics on supported systems and configurations:

- Software Product Description 55.07.00
- Unique Product Identifier VA0

DECnet for OS/2

DECnet for OS/2, a component of PATHWORKS for OS/2, allows IBM personal computers and selected compatibles running OS/2 Standard Edition, to participate as nonrouting (end-) nodes in DECnet computer networks via an Ethernet connection. OS/2 clients can participate in a DECnet environment as full peers on the DECnet network with all other DECnet clients such as DOS, VMS, ULTRIX, and RSX systems.

With the command-line user interface, DECnet for OS/2 utilities can be run in the context of a Presentation Manager screen group. The user can write DECnet applications that take advantage of Presentation Manager features. (Applications that use DECnet do not run in the OS/2 compatibility box.)

Task-to-task communication allows for the development of distributed applications. Programs can share information without user intervention, and access to the full set of DECnet functions is supported for OS/2 programs written in MACRO assembler and C. The C language network interface library is very similar to that of DECnet-DOS (described elsewhere in this section), and is a compatible subset of the interface provided with DECnet ULTRIX. Small, compact, medium, and large memory modules are supported.

OS/2 applications that use the NETBIOS interface can be layered on DECnet for OS/2.

The SETHOST utility of DECnet for OS/2 provides VT220 terminal emulation via LAT and CTERM. Multiple sessions can be established, suspended, and resumed. Local printers are supported. The Digital Multinational Character Set (MCS), National Replacement Character Set (NRCS), and ISO Latin-1 (ISO) character sets are also supported. A scripting capability allows the user to automate frequently used functions.

Network management functions via the Network Control Program (NCP) allows the user to display statistics and error information, configure the DECnet node, control network node components, and test LAN components.

Features

- Provides OS/2 clients the ability to participate in Phase IV DECnet networks as full peers.
- Uses task-to-task communications for the development of distributed applications. Programs can share information without user intervention.
- The SETHOST utility provides VT220 terminal support via the LAT, CTERM or asynchronous serial communications port with support for multiple sessions.
- Using the Network Device Utility (NDU), OS/2 clients can share disk and printer resources on the network.
- Network file transfer provides for bidirectional transfer of both ASCII and binary files between OS/2 nodes and any other system on the DECnet network.
- Provides the OS/2 Electronic Mail Utility.

Prerequisite Hardware

DECnet for OS/2 requires an 80286, or 80386 processor; supported models include IBM PC/AT and PS/2 models, as well as COMPAQ, Olivetti, and Zenith. Requirements for the systems include:

- Minimum of 1.5-MB system memory for OS/2 V1.0 variants
- Minimum of 3-MB system memory for OS/2 V1.1 variants
- Minimum of one diskette drive capable of reading 5.25-inch, 1.2-MB diskettes or 3.5-inch, 1.44-MB diskettes
- Hard disk with a minimum of 3-MB free disk space

- One Ethernet network connection from one of the following boards:
  - DEC EtherWORKS controller card
  - 3COM 3C503 Etherlink II
  - 3COM 3C523 Etherlink/MC Ethernet controller

Prerequisite Software

OS/2, V1.1 or V1.2

Ordering Information

Use the software order code template in this section when building an order code from the software Unique Product Identifier (UPI). Refer to the Software Product Description (SPD), or consult your local sales representative to determine whether the software application ordered is supported by the processor for which it is intended.

Refer to the following sources for further information on supported processors and services:

- Software Product Description 55.23.00
- Unique Product Identifier YES

DECnet/E

DECnet/E software allows a suitably configured RSTS/E system to participate as a routing or nonrouting node in DECnet computer networks. DECnet/E can connect to an Ethernet and supports all Phase IV capabilities except area routing.

DECnet/E is a Phase IV network product and is warranted for use with supported Phase III and Phase IV DECnet products.

Ordering Information

▲ Refer to the following sources for information on prerequisite hardware and software:

- Software Product Description 10.73.00
- Unique Product Identifier 692

DECnet-RT

DECnet-RT software allows a suitably configured RT-11 Foreground/Background (FB) system to participate as an end-node in DECnet computer networks. The backward compatibility of Phase IV allows DECnet-RT to connect to Ethernet through any Phase IV routing node.

DECnet-RT is a Phase III network product and is warranted for use with supported Phase III and Phase IV DECnet products supplied by Digital. ▲ Refer to Appendix A for configuration considerations.

Ordering Information

▲ Refer to the following sources for information on supported processor and services:

- Software Product Description 10.72.00
- Unique Product Identifier 687DECnet/OSI for

Internet Communications with VAXELN

The VAXELN toolkit is a VMS layered product used for the development of dedicated realtime VAXELN systems that run on VAX and MicroVAX processors. The development tools run on any host VAX computer under VMS or MicroVMS operating systems. A finished VAXELN system runs directly on a supported run-time target VAX or MicroVAX processor without the presence of another operating system.

VAXELN is especially suited to, although not limited to, creating realtime applications; that is, applications in which the system's response (both speed and predictability) to external events is critical.

VAXELN supports industry-standard networking through a set of ARPANET protocols. The supported protocols include: Transmission Control Protocol (TCP), Internet Protocol (IP), Internet Control Message Protocol (ICMP), Address Resolution Protocol (ARP), Reverse Address Resolution Protocol (RARP), User Datagram Protocol (UDP), and Boot Protocol (BOOTP). This support is provided over a CSMA/CD LAN (Ethernet) and it interoperates with ULTRIX, DEC TCP/IP Services for VMS and UNIX. C language applications may be written using the Berkeley Socket Programming interface.

Prerequisite Hardware

VAX, MicroVAX, or VAXstation configurations as specified in the System Support Addendum (SSA) 28.02.12-A

Prerequisite Software

For Host Development System:

- VMS operating system or MicroVMS operating system
- Refer to the System Support Addendum 28.02.11-x for availability and required versions of prerequisite/optional software

Ordering Information

Refer to the following sources for further information for the VAXELN Toolkit:

- Software Product Description 28.02.12
- System Support Addendum 28.02.12-A
- Unique Product Identifier 375

Refer to the following source for further information for the VAXELN Run-Time System:

- Unique Product Identifier 376

ULTRIX-TCP/IP and NFS

ULTRIX is Digital's native implementation of the UNIX operating system for all currently supported VAX, MicroVAX, VAXstation, and RISC-based DECstation systems. TCP/IP and NFS are bundled with the ULTRIX operating system.

ULTRIX provides the same Internet (or TCP/IP) communications protocol stack as Berkeley BSD4.3. Specific Internet protocols supported include FTP, Telnet, SMTP, IP, TCP, UDP, ICMP, ARP, TFTP, and EGP.

ULTRIX incorporates the Network File System (NFS), which allows transparent sharing of file systems between networked computers. ULTRIX also provides diskless support through NFS, which allows diskless ULTRIX workstations to be booted over the network by other ULTRIX systems. POSIX-compatible file- and record-locking is supported by the NFS Lock Manager/Status Monitor. Also, Yellow Pages (YP) provides support for centralized system management of files.

Also, Digital's network installation services for ULTRIX with NFS includes a backup and restore systems that can be activated over the network from the system manager's desk.

Features

- Support for complete Internet TCP/IP network protocol stack.
- Remote Procedure Call (RPC) based on Apollo's NCS V1.5.
- X/OPEN Transport Interface Library (XTI) on UDP and TCP transports.
- Simple Network Management Protocol (SNMP) model agent.
- Project Athena Services: Kerberos Authorization, Hesiod Naming, Network Time Protocol (ntp).
- Internet name resolution using the Berkeley Interface Name Domain (BIND) name service.
- Support for Internet Subnet Routing.
- Berkeley extensions such as .rlogin, .rwho, also supported.
- TCP/IP and DECnet-ULTRIX can operate concurrently over a single physical Ethernet link.
- FDDI support for DECstation 5000.
- IBM 2780/3780 Terminal Emulator using BSC (available on all UNIBUS and Q-bus VAX systems).

Note: LAT support is also bundled with ULTRIX, as is the LAT/Telnet Gateway, which allows LAT users to access UNIX operating system-based systems as Telnet users.

LAT/Telnet Gateway

The LAT TELNET Gateway is a no-cost software solution that allows access to a TCP/IP network from a DECnet network that uses the LAT protocol. For VAX system users, connection through the gateway to a remote, Telnet-based UNIX system is virtually transparent and is established by a single command.

The LAT TELNET Gateway addresses users' requirements for access to multivendor hosts running the UNIX operating system and the TCP/IP network protocol. In many cases, the need for access to the UNIX system is "causal," with only occasional use. In these situations, the LAT/Telnet Gateway is a perfect solution. No additional software or hardware is required.

Features

- Included in the ULTRIX operating system. No special software is required.
- Allows remote log in from a DECserver to a UNIX host without requiring log in to a local ULTRIX system.
- Adds value and preserves investment in existing Digital terminal servers.
- Makes printers on the LAT side of the network easily accessible from a UNIX system.

- Allows VMS or ULTRIX operating system users to become familiar with the UNIX operating system without leaving their terminals.

Prerequisite Hardware

▲ Refer to Software Product Description 26.40.00 for processor support.

Prerequisite Software

TCP/IP, NFS, and LAT TELNET Gateway come bundled with the ULTRIX and ULTRIX Worksystems Software operating systems.

Ordering Information

Use the software order code template in this section when building an order code from the software's Unique Product Identifier (UPI). ▲ Refer to the Software Product Description (SPD), or consult your local sales representative to determine whether the software application ordered is supported by the processor for which it is intended.

▲ Refer to the following sources for further information on supported processors and services:

- Software Product Description 26.40.15
- Unique Product Identifiers VEY, VYV
- LAT/TELNET Gateway Data Sheet (EC-F0711-42)
- UWS Information Sheet (EC-F0453-43)
- ULTRIX Information Sheet (EC-F0404-43)
- Standards Information Sheet (EC-F0396-48)
- ULTRIX Brochure (EC-E0481-43)
- *ULTRIX Handbook* (EC-H0592-43)
- ULTRIX SQL Information Sheet (EC-F0951-45)
- *ULTRIX System Manual*

DEC TCP/IP Services for VMS

The DEC TCP/IP Services for VMS V2.0, a VMS layered software product, provides both an ARPANET communications subsystem and Network File System (NFS) server capabilities for VMS. Internet networking protocols supported include ARP, ICMP, RIP, IP, UDP, TCP, FTP, Telnet, and SMTP.

Additional support includes:

- Remote Procedure Call (based on Apollo's NCS V1.5)
- Berkeley Interface Name Domain (BIND) resolver
- Simple Network Management Protocol (SNMD) agent
- Fiber Distributed Data Interface (FDDI) support
- DEC TCP/IP auxilliary server (inetd)
- Berkeley R-commands (rsh, rlogin, rexec server)
- Remote printing commands (lpr, lpd)
- File conversion "on-the-fly"
- DEC TCP/IP management
- Enhanced security and network access control

C language applications may be written using Berkeley Socket Programming interface when this product is used with the VMS operating system V5.2 or later.

The DEC TCP/IP Services for VMS also provides a Queued Input/Output (QIO) programming interface so VMS users can write applications to access the lower-level protocols. Users can write networking applications in any VAX language using the standard ASSIGN, DASSGN, and QIO system services.

The Network File System (NFS) server provides UNIX operating system-based clients with transparent access to remote file systems. The NFS server promotes data sharing between clients by providing a central data storage facility for VMS, ULTRIX, and UNIX file systems.

Also supported is the second release of DECwindows, allowing the option of running DECwindows using the TCP/IP protocols.

Features

- Customers can connect VMS and ULTRIX systems with UNIX operating system-based systems from other vendors using industry-standard TCP/IP protocols for communication.
- Users can write network applications that access the Internet protocols using standard VMS services.
- UNIX operating system-based clients can access VMS and UNIX operating system files stored on a remote VMS system or VAXcluster system.
- VMS system managers can manage Internet communications and the NFS server without a detailed knowledge of UNIX syntax.

The DEC TCP/IP Services for VMS product consists of three major components in one convenient package:

- DEC TCP/IP Run-Time for VMS
- DEC TCP/IP Applications for VMS
- DEC NFS for VMS

One package needed to obtain all functionality.

Prerequisite Hardware

▲ Refer to Software Product Description 25.A4.04 for processor support. At least one Ethernet controller is required.

Note: The DEC TCP/IP Services for VMS can share the same Ethernet interface with DECnet-VAX and LAT.

Prerequisite Software

- For the VMS server, VMS operating system V5.3 or later.
- For UNIX operating system-based clients, any UNIX system that supports NFS V2.0 protocols specifications and the networking protocols specified by the Internet RFCs.

Ordering Information

▲ Refer to the following for further information on supported processors and services:

- Software Product Description 25.A4.04
- Unique Product Identifier VHR

WIN/TCP, WIN/TCP DDN and WIN/TCP SCI

WIN/TCP, WIN/TCP DDN, and WIN/TCP SCI, developed by the Wollongong Group and distributed by Digital through the Digital Distributed Software (DDS) program, provide the TCP/IP protocol suite for VMS systems, allowing the VMS nodes to communicate with any UNIX, ULTRIX, MS-DOS, Macintosh (or other) system that uses the Internet Protocol (TCP/IP).

Features

- WIN/TCP supports TCP/IP communications services over any Digital 802.3/Ethernet communications controller. WIN/TCP DDN supports connection to the various Defense Data Networks (DDNs), ARPANET, MILNET, or DISNET through X.25 communications interfaces supplied by Advanced Computer Communications. WIN/TCP SCI provides high-speed interface support for the DRB-32C personality module as an interconnect with CRAY Supercomputers.
- WIN/TCP is based on the most recent specifications for TCP/IP and is compatible with the BSD 4.3 UNIX operating system.
- Provides TCP/IP utility and application development services and support for VMS users:
  - File Transfer: The File Transfer Protocol (FTP) permits the transfer of both text and binary files between network hosts.
  - Electronic Mail: Users have a choice of WINS Mailer which provides electronic mail delivery to VMS Mail, SMTP, DEC MESSAGE ROUTER and ALL–IN–1 systems, or Pony Express which provides store-and-forward capabilities. Both mailers support the Simple Mail Transfer Protocol (SMTP) and use the VMS callable mail interface.
  - Virtual Terminal: The Telnet protocol allows a user to log into a remote system and use the resources of the remote host.
  - Programming Support: Socket programming support provided for users wishing to develop their own network applications.
  - Network Security: Network access and file transfer security are provided via SECURE FTP and NETCONTROL.
  - Dual (UNIX or VMS operating system style) command line interface is provided for all major network applications and utilities.
  - Remote DCL support available for users who wish to invoke VMS DCL commands remotely via rlogin and rsh.
- WIN/TCP provides support for VAXclusters by enabling access to some or all nodes in a VAXcluster using separate IP node names.
- WIN/TCP and WIN/TCP DDN support the following protocols: IP, TCP, UDP, ICMP, EGP, FTP, SMTP, and ARP.

Availability

Except for Japan, Kuwait or Bahrain, this product is available worldwide. However, the DDS contract is implemented in the United States only. Europe and GIA geographies may place product orders through the United States.

Prerequisite Hardware

- For WIN/TCP, any valid VAX system with a valid 802.3/Ethernet communications controller
- For WIN/TCP DDN, any valid VAX system with a DDN X.25 interface from Advanced Computer Communications (ACC)

Prerequisite Software

- VMS operating system V4.7 or later

Optional Software

- WIN/TCP DDN option provides support for the ACC and Simpact X.25 controllers, BLACKER and SHARED Ethernet.
- WIN/TCP SCI option provides high-speed interface support for the DRB-32C module.

Related Information

NFS Server and Client are available as separate products.

Ordering Information

▲ Refer to the following sources for further information on supported processors and services:

- Software Product Description 29.80.05
- Unique Product Identifier 0JX, 0K0, YMY

Overview

Digital's 802.5/Token Ring-compatible products offer customers a comprehensive approach for providing a physical connection between individual devices on a local area network (LAN) or a wide area network (WAN).

There are three operating environments supported for the 802.5/Token Ring:

- PATHWORKS for VMS V4.1–1 (VAXserver)
- PATHWORKS for DOS V4.1A (Client)
- PATHWORKS for OS/2 V2.0A (Client and Server)
- PATHWORKS for DOS (TCP/IP) V1.1A
- PATHWORKS for OS/2 (TCP/IP) V1.0
- PATHWORKS for DOS (NetWare Coexistence) V1.1

DECnet and TCP/IP networks support PATHWORKS for DOS and OS/2 systems on 802.5/Token Ring.

The 802.5/Token Ring has the capacity to perform at a transfer rate of 4 Mb/s or 16 Mb/s.

Digital's 802.5/Token Ring-compatible products support source routing as a DECnet data link service and arbitrary MAC layer addressing. These products provide Digital's customers with greater flexibility for coexisting in an IBM Token Ring network.

The 802.5/Token Ring-compatible products include controllers and media filters, routers, cables and interconnects, multistation access units, software, and services.

Controllers and Media Filters

Network Interface Cards (NICs), sometimes called controllers or adapters, are hardware devices that connect 802.5/Token Ring systems to 802.5/Token Ring networks.

Digital offers Q-bus and PC controllers that provide a switchable link to either 4 Mb/s or 16 Mb/s 802.5/Token Ring networks. PC NICs allow customers to operate PC/AT, Micro Channel, and EISA bus-based personal computers. Q-bus controllers allow customers to operate MicroVAX VAXserver 3xxx and VAX VAXserver 4000 systems.

Media filters, sometimes referred to as baluns, are hardware devices that allow 802.5/Token Ring adapters to take advantage of unshielded twisted-pair (UTP) cabling.

Bridging Routers

Digital offers standards-based routers that are compatible with the 802.5/Token Ring and that provide solutions for interconnecting LANs and WANs.

Bridging routers select the appropriate circuit path for your message. This circuit path selection and data transmission method is transparent and cost-effective. Bridging routers increase network efficiency, manage the overall performance of your network, and provide 802.5/Token Ring network integration for multiprotocol, LAN/WAN environments.

Cables/Interconnects

The OPEN DECconnect cabling and connecting hardware complies with EIA/TIA component specifications and EIA building wiring standards. These passive components provide connections between the active components on the network.

Multistation Access Units

Multistation Access Units (MAUs) provide reliable configuration flexibility and multimedia support for shielded and unshielded 802.5/Token Ring networks. They provide the interconnecting points for all node devices within the 802.5/Token Ring.

Workgroup Wire Centers (WWCs) each connect up to four nodes to the Series 70 MAU using a single UTP cable. Power supplies provide the regulated output voltages needed for the proper operation of the MAUs and WWCs.

Software

The 802.5/Token Ring network software provides the support required for customers to communicate with PCs and VAX systems on 802.5/Token Ring LANs. ▲ Refer to Section 6 for more information on PATHWORKS software.

TokenVIEW Plus and SNMP/TR Proxy Agent software for 4 Mb/s and 16 Mb/s 802.5/Token Ring networks turns a DOS-based PC into a ring network management system. ▲ Refer to Section 8 for more information on 802.5/Token Ring management software.

Services

Digital provides 802.5/Token Ring Services through Network Integration Services (NIS) and Desktop Integration Services (DTS), remedial Software Product Services through the Vendor Application Services (VAS) Program, and Hardware Product Services through Hardware Product Services (HPS).

Products and services are available immediately, worldwide.

For information on network consulting, network implementation, and network management services for building 802.5/Token Ring networks, contact your local Network Integration Services (NIS) representative or your local Desktop Integration Services (DTS) representative.

Typical 802.5/Token Ring Network Configuration

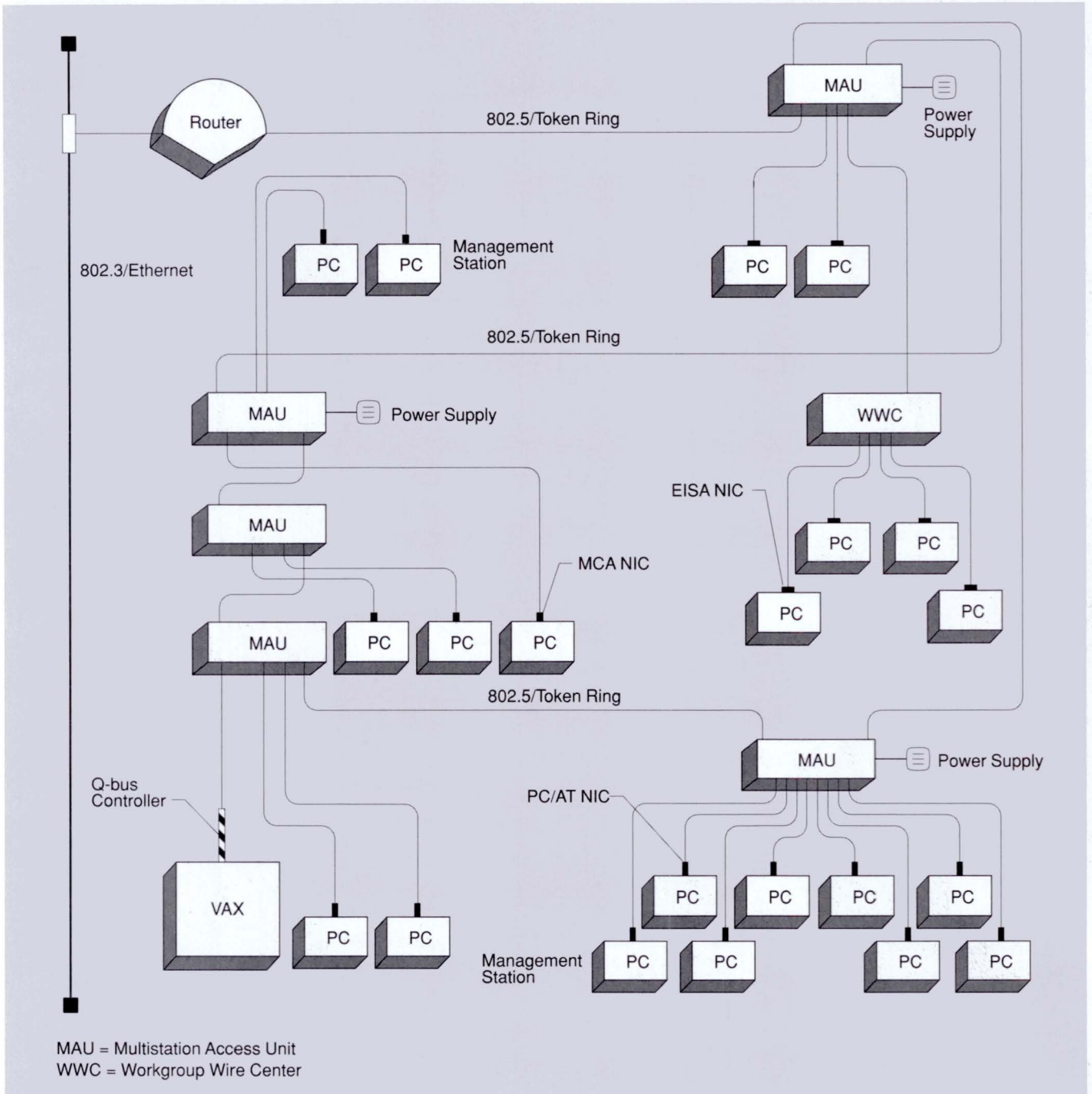

TBG-174-00

Typical Multi-LAN Enterprise Network Configuration

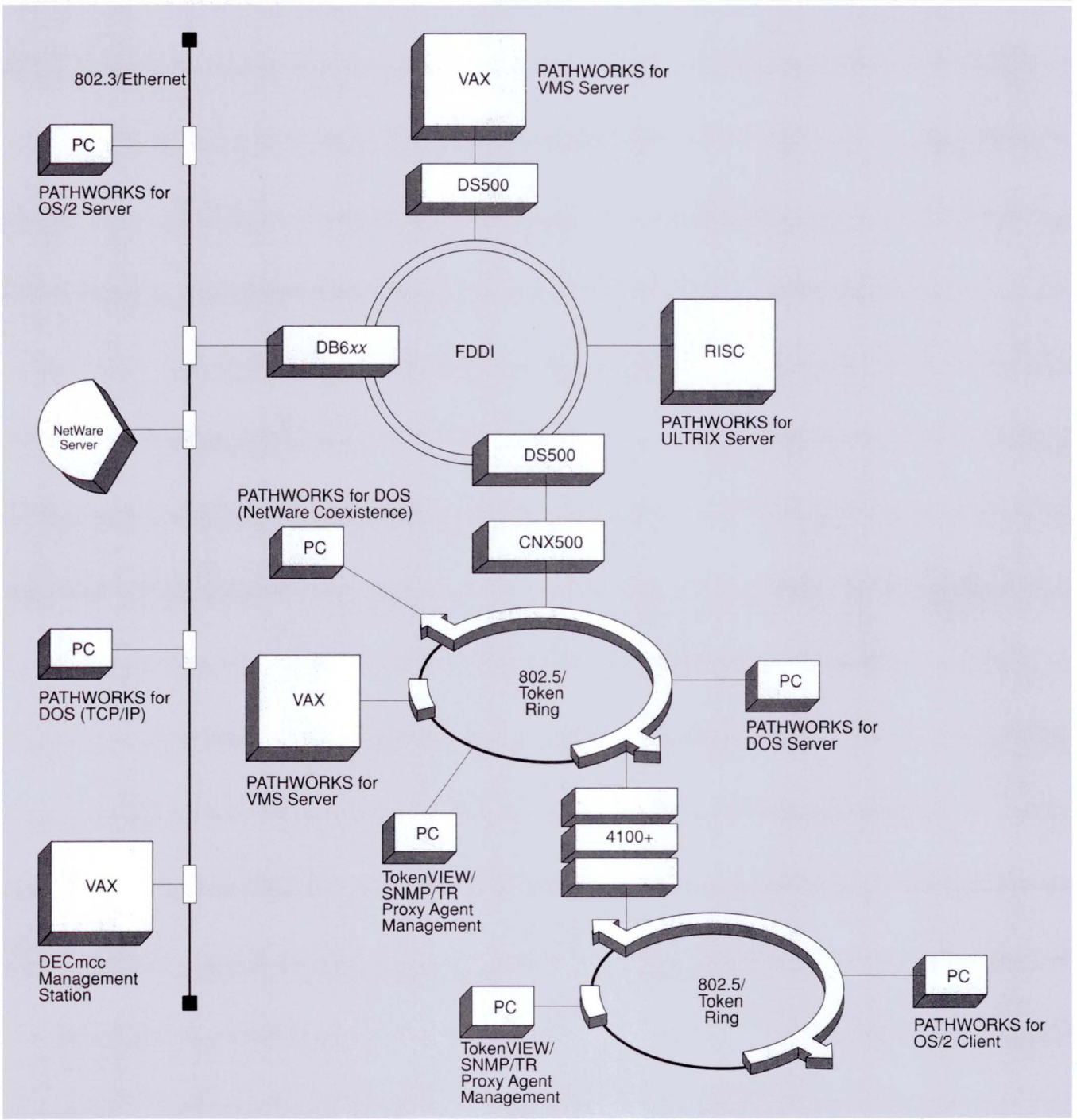

TBG-176-00

DEC TRNcontroller 100

The DEC TRNcontroller 100 (DEQRA-CA) is a Q-bus controller that enables MicroVAX VAXserver 3xxx (except the 3100) and VAX VAXserver 4000 systems to connect to a 4 Mb/s or 16 Mb/s 802.5/Token Ring network.

Features

- Digital Token Ring Network Device Driver (TRDRV V/V V1.1) for VMS.
- Supports DECnet VAX.
- Includes self-test diagnostics and VMS installation verification procedure kit.
- Serial console port can support a console device for debugging purposes (BC29E-15).
- Supports STP connection only.
- Microcode-based device.
- Supported in BA200 and BA400 series enclosures (MicroVAX VAXserver 3xxx, 4000 systems, except 3100).
- Hardware and software documentation is included.
- Source routing as a DECnet data link service.
- Arbitrary MAC layer addressing.

Specifications	
Mounting Code	One quad slot
Power Requirements	
dc amps drawn at 5 Vdc	5.0 A
dc amps drawn at 12 Vdc	0.1 A
Bus loads	5.0 Vac, 4.2 Vdc
Operating Environment	
Operating temperature	15° C to 32° C (59° F to 90° F)
Relative humidity	20% to 80% noncondensing (complies with DEC 102 standard , Class A)

Note: The DEQRA-CA requires BN26P series cables. ▲ Refer to Section 4, "Communications Cables," for details about cables.

Prerequisite Hardware

- VAX Configuration

Prerequisite Software

- VMS V5.5 software

Optional Software

- DECnet VAX IV software
- PATHWORKS for VMS 4.1–1

Ordering Information

Option	Order Code
DEC TRNcontroller 100	DEQRA-CA

ProNET-4/16 AT Network Interface Card

The ProNET-4/16 AT Network Interface Card provides an interface between a 4 Mb/s or 16 Mb/s 802.5/Token Ring network and IBM PCs, PC/ATs, and ISA compatibles.

Features

- Flash-programmable boot ROM.
- Integrated UTP and STP support.
- Software switchable between 4 Mb/s and 16 Mb/s.
- Includes NDIS, NetWare V2.15, and 386 drivers.
- 128 KB on-board memory.
- 8-bit or 16-bit bus interface.
- RJ-45 and DB-9 connectors.
- RapiDriver and Bus Master implementation for higher performance.
- Hardware and software documentation is included.
- Qualified to support PATHWORKS for DOS and OS/2.
- Lobe cable (BC29L–03) ordered separately.

Specifications	
Mounting Code	1/2 ISA slot (8.5" x 4.2")
Power Requirements	
dc amps drawn at 5 Vdc	3.63 A
Operating Environment	
Operating Temperature	5° C to 40° C (39° F to 104° F)
Relative humidity	5% to 95% noncondensing

Prerequisite Hardware

IBM compatible PC/XT and PC/AT platforms

Prerequisite Software

MS-DOS Version 3.x or later, or OS/2 standard edition Version 1.2 or later

Ordering Information

Option	Order Code
ProNET-4/16 AT Network Interface Card	DW110-AA

ProNET-4/16 Micro Channel Interface Cards

The ProNET-4/16 Micro Channel Interface Cards provide interface between a 4 Mb/s or 16 Mb/s 802.5/Token Ring network, IBM PS/2, and Micro Channel compatible personal computers.

Features

- Integrated STP and UTP support.
- Software switchable between 4 Mb/s and 16 Mb/s.
- Includes NDIS, NetWare V2.15, 386 drivers, and NetWare File Server Driver.
- 128 KB on-board memory.
- 16-bit bus interface.
- RJ-45 and DB-9 interface connector.
- RapiDriver and Bus Master implementation for higher performance.
- Hardware and software documentation is included.
- Qualified to support PATHWORKS for DOS and OS/2.
- Lobe cable (BC29L–03) ordered separately.

Specifications	
Mounting Code	One Micro Channel slot
Power Requirements	
dc amps drawn at 5 Vdc	2.73 A
Operating Environment	
Operating temperature	5° C to 40° C (39° F to 104° F)
Relative humidity	8% to 95% noncondensing

Prerequisite Hardware

IBM PS/2 and Micro Channel compatible personal computers

Prerequisite Software

MS-DOS Version 3.x or later, or OS/2 standard edition Version 1.2 or later

Ordering Information

Option	Order Code
ProNET-4/16 Enhanced Micro Channel Interface Card	DW210-AA

ProNET-4/16 EISA Network Interface Card

The ProNET-4/16 EISA Network Interface Card (DW300-AA) provides the interface between the 4 Mb/s or 16 Mb/s 802.5/Token Ring Network and the EISA Network compatible personal computers.

Features

- Supports STP and UTP media.
- Software switchable between 4 Mb/s and 16 Mb/s.
- Includes NDIS, NetWare V2.15, and 386 drivers.
- 128 KB on-board memory.
- 32-bit bus interface.
- RJ-45 and DB-9 interface connector.
- Bus Master DMA for improved performance.
- Hardware and software documentation is included.
- Qualified to support PATHWORKS for DOS and OS/2.
- Lobe cable (BC29L–03) ordered separately.

Specifications	
Mounting Code	One EISA slot
Power Requirements	
dc amps drawn at 5 Vdc	3.63 A
Operating Environment	
Operating temperature	5° C to 40° C (39° F to 104° F)
Relative humidity	8% to 95% noncondensing

Prerequisite Hardware

Supports the EISA architecture

Prerequisite Software

MS-DOS Version 3.x or later, or OS/2 standard edition Version 1.2 or later

Ordering Information

Option	Order Code
ProNET-4/16 EISA Network Interface Card	DW300-AA

ProNET-4/16 Unshielded Twisted-Pair (UTP) Media Filter

The ProNET-4/16 UTP Media Filter (H7014-AA) allows connectivity between a 100-ohm unshielded twisted-pair cable and the older versions of IBM's 16/4 Adapter (ISA) and 16/4 Adapter/A (MCA) and the ProNET-4/16 (MCA) 150-ohm Network Interface Controllers (NICs).

The H7014-AA also provides proper network filtering for FCC compliance and proper impedance matching when it is connected to UTP cabling.

The H7014-AA is installed between the NICs DB-9 connector and the 8-pin modular jack used for connection to office cabling.

Features

- Used with IBM Token Ring Network 16/4 Adapter (FRU #16FO544).
- Used with IBM Token Ring Network 16/4 Adapter/A (FRU #16F1144).
- Used with ProNET-4/16 MCA Interface Card (DW200-AA).
- Compatible with Series 70 Intelligent Wire Center (IWC).

Specifications	
Physical Characteristics	
Height	1.91 cm (.75 in)
Width	4.45 cm (1.75 in)
Depth	9.54 cm (3.75 in)
Impedance	
Input	150 ohms
Output	100 ohms
Operating Environment	
Operating temperature	5° C to 40° C (39° F to 104° F)

Prerequisite Hardware

IBM Token Ring Network 16/4 Adapter (FRU #16FO544) or 16/4 Adapter/A (FRU #16F1144)

Ordering Information

Option	Order Code
ProNET-4/16 UTP Media Filter	H7014-AA

ProNET-4/16 Unshielded Twisted-Pair (UTP) Media Filter

The ProNET-4/16 UTP Media Filter (H7015-AA) allows connectivity between a 100-ohm unshielded twisted-pair cable and IBM's new versions of the 16/4 adapter (ISA) and the 16/4/M Adapter/A (MCA) 150-ohm Network Interface Controllers (NICs).

The H7015-AA also provides proper network filtering for FCC compliance and proper impedance matching when connected to UTP cabling.

The H7015-AA is installed between the NICs DB-9 connector and the 8-pin modular jack used for connection to office patch cabling.

Features

- Used with IBM Token Ring Network 16/4 Adapter/A (FRU #53F7748).
- 16/4/M Adapter/A (MCA) (FRU #16F1133).
- DB-9 interface type connector.
- Compatible with Series 70 Intelligent Wire Center (IWC).

Specifications	
Physical Characteristics	
Height	1.91 cm (.75 in)
Width	4.45 cm (1.75 in)
Depth	9.53 cm (3.75 in)
Impedance	
Input	150 ohms
Output	100 ohms
Operating Environment	
Operating temperature	5° C to 40° C (39° F to 104° F)

Prerequisite Hardware

IBM Token Ring Network 16/4 Adapter/A (FRU #53F7748)

Ordering Information

Option	Order Code
ProNET-4/16 UTP Media Filter	H7015-AA

4100+ Bridging Router Base Systems

The 4100+ Bridging Router Base Systems support 4 Mb/s or 16 Mb/s multiprotocol routing and bridging between local and remote networks.

These Bridging Router Base Systems are designed to provide an effective method for integrating 802.5/Token Ring and other LAN technologies in a mixed environment and for supporting the industry protocols listed in the table below.

Features

- 4 Mb/s or 16 Mb/s backbone connectivity (UTP and STP).
- Network management capabilities (SNMP).
- WAN connectivity: 64 Kb/s, T1 (2.048 Mb/s), PDN X.25, DDN X.25 (check with local sales office for PTT approvals).
- 20 MHz 386 CPU.
- Watchdog timer.
- Optional rackmount shelf kit is available.
- Manageable via DECmcc SNMP AM V1.1.
- 2 MB RAM.
- Event logging system and customized event/error reporting.

Digital offers a wide selection of packaged Bridging Routers to meet the needs of industry. These are listed in tables later in this section.

Supported Protocols

The following table contains a list of the protocols supported by the 4100+.

4100+ Bridging Router Base Systems Supported Protocols

LAN/Backbone	WAN	Multiprotocol	Bridging	Network Management
802.3/Ethernet	T1/E1	NetWare IPX	Source Routing Bridging (SRB)	SNMP MIB II
802.5/Token Ring 4 Mb/s or 16 Mb/s	64 Kb/s	TCP/IP	Spanning Tree Bridging (ST)	
Apollo Token Ring	X.25	OSI (ES-IS)		
	Frame Relay	DECnet Phase IV		
	SDLC			
		XNS (3Com, Xerox, UB)		
		AppleTalk		
		Apollo Domain		

4100+ Specifications	
Physical Characteristics	
Height	17.7 cm (7.0 in)
Width	41.3 cm (16.25 in)
Depth	43.8 cm (17.25 in)
Weight	21.3 kg (47 lbs)
Power Requirements	
Input voltage	90 Vac to 260 Vac
Input frequency	50 Hz to 60 Hz
Power consumption	270 Watts
Operating Environment	
Operating temperature	0° C to 50° C (32° F to 122° F)
Operating humidity	10% to 95% (noncondensing)
Connectors*	One EIA-RS232, male DB 25 for local console and IEC-320 line cord connector, COM1
Performance	3,000 to 5,000 packets per second
I/O ports (slots)	Four
Configuration options	Four LAN max Six WAN max
Boot Load	5.25-in diskette
Power Cord	U.S. line cord/Universal Adapter
* Requires VT100 compatible or PC terminal emulation software for initial configuration.	

Prerequisite Hardware

Communications interfaces: Some combination of T1, 64 Kb serial lines, X.25, 802.3/Ethernet, and 802.5/Token Ring.

Prerequisite Software

4100+ Bridging Router System Software V12.1

Configuration Guidelines for 4100+

4100+ preconfigured packaged systems with X.25 include X.25 software and the X.25 Interface hardware (DETAB-AH). Serial line cables are not included and must be ordered as separate options based on customer preference of cable type.

4100+ preconfigured packaged systems with SDLC require the T1 Serial Interface (DETAB-AD) and a serial line cable. These must be ordered separately.

Ordering Information

The 4100+ Base Systems include TCP/IP and Source Routing and Spanning Tree Bridging as part of the Systems Software.

The preconfigured 4100+ packaged systems include the base system hardware and software plus DECnet, IPX, and an optional protocol forwarder (XNS, SDLC, Frame Relay, AppleTalk, Apollo Domain, or ES–IS). Customers can order each system with the software preconfigured and automatically get a wide combination of software protocols, which are supported on 802.5/Token Ring networks. Optional protocols are included at no extra cost to the customer.

The network interface options — Ethernet, Token Ring, T1 or serial lines — are *not* bundled into the systems and *must be ordered separately* giving customers more flexibility in configuring their networks. Cables for the interface options must be ordered separately unless otherwise specified.

The following table lists the part numbers for the base systems and for the different preconfigured bridging router systems that are available for 802.5/Token Ring networks.

4100+ Order Codes

Option	**Order Code**
Base System Hardware with: System Software, TCP/IP, Source Routing and Spanning Tree Bridging	DETAC-A*
Preconfigured 4100+ Packaged Systems (Includes Base System Hardware/Software)	
DECnet IV, IPX, and XNS	DETAC-C*
DECnet IV, IPX and Frame Relay	DETAC-D*
DECnet IV, IPX and SDLC	DETAC-E*
DECnet IV, IPX and OSI (ES–IS)	DETAC-F*
DECnet IV, IPX and AppleTalk	DETAC-G*
DECnet IV, IPX and Apollo Domain	DETAC-H*
DECnet IV and IPX	DETAC-J*
DECnet	DETAC-K*

* Replace the * with one of the following codes: A (United States), B (International)

The following table lists the part numbers for the base systems with X.25 capabilities and for the different preconfigured bridging router systems that are available for 802.5/Token Ring networks.

4100+ with X.25 Order Codes	
Option	**Order Code**
Base System Hardware with: System Software, X.25, TCP/IP, Source Routing and Spanning Tree Bridging	DETAD-A*
Preconfigured 4100+ Packaged Systems (Includes Base System Hardware/Software)	
DECnet IV, IPX and XNS	DETAD-C*
DECnet IV, IPX and Frame Relay	DETAD-D*
DECnet IV, IPX and SDLC	DETAD-E*
DECnet IV, IPX and OSI (ES–IS)	DETAD-F*
DECnet IV, IPX and AppleTalk	DETAD-G*
DECnet IV, IPX and Apollo Domain	DETAD-H*
DECnet IV and IPX	DETAD-J*
* Replace the * with one of the following codes: A (United States), B (International)	

4100+ Optional Interface Line Cards and Cables

The following table lists the 4100+ optional line cards, cables, and the associated order codes.

4100+ Optional Interface Line Cards and Cables Order Codes

Option	Order Code
Proteon Apollo Token Ring Interface	DETAB–AA
Proteon Ethernet Interface	DETAB–AB
Proteon Token Ring Adapter	DETAB–AC
Proteon T1 Serial Interface	DETAB–AD
HD-26 to RS232 Interface Cable, 18 inch*	BC07V–1F
HD-26 to RS449 Interface Cable, 18 inch*	BC07Y–1F
HD-26 to V.35 Interface Cable, 18 inch*	BC07Z–1F
Proteon X.25 Interface	DETAB–AH
Proteon RS232 Interface + Cable	DETAB–AE
HD-26 to RS232 Interface Cable**	BC07V–1J
Proteon RS449 Interface + Cable	DETAB–AF
HD-26 to RS449 Interface Cable**	BC07Y–1J
Proteon V.35 Interface + Cable	DETAB–AG
HD-26 to V.35 Interface Cable**	BC07Z–1J
Proteon 4100+ Rackmount Kit	DETAB–AI

* Cables for use with T1 and X.25 serial interfaces

** Spare cables for serial line interfaces excluding T1 and X.25 interfaces (20 inch)

Proteon Apollo Token Ring Interface (DETAB-AA) Features

- Can use standard IBM cabling system with IBM loop wiring concentrator.
- Supports shielded twisted-pair.
- Uses Apollo's 12 Mb/s Token Ring.
- Connector: Token Ring concentrator, 7-pin (2-coaxial) combination D-sub.

Proteon Ethernet Interface (DETAB-AB) Features

- Supports spanning tree bridging.
- Compatible with Ethernet V1.0 and V2.0.
- Jumper compatible in the field with Ethernet V1.0 and V2.0, Ethernet 802.3 (10Base5), and IEEE 802.3 (10Base2 ThinWire Ethernet).
- Connectors: 15-pin female D-sub, and BNC.

Proteon Token Ring Adapter (DETAB-AC) Features

- Conforms to IEEE 802.5 specification for 4 Mb/s and 16 Mb/s Token Ring and interoperates with IBM Token Ring network.
- Supports both shielded and unshielded twisted-pair.
- Connectors: RJ-45, and 9-pin D-sub.

Proteon T1 Dual Port Interface (DETAB-AD) Features

- Single high-speed or dual medium-speed synchronous.
- Single line with maximum line speed of 2.048 Mb/s on one port.
- Dual lines with maximum line speed of 800 Kb/s on one port and 64 Kb/s on the second port.
- Requires external clock source from a data communications equipment (DCE) device.
- Dual high-density 26-pin, D-subminiature connector.
- Ports accommodate adapter cables for RS232, RS449, and V.35.

Serial Line Cable Options for T1 and X.25 Serial Interfaces (Minimum One, Ordered Separately)

Model Number	Interface	Features
BC07V-1F	RS232	High-density 26-pin to RS232 adapter cable 18 in length, 25-pin, male, D-sub
BC07Y-1F	RS449	High-density 26-pin to RS449 adapter cable 18 in length, 37-pin, male, D-sub
BC07Z-1F	V.35	High-density 26-pin to V.35 adapter cable 18 in length, 34-pin, male, V.35 connector

Proteon RS232 Interface (includes cable) (DETAB-AE) Features

- Single full-duplex, synchronous port with modem control.
- Operates at up to 19.2 Kb/s at 50 feet (15 m) maximum.
- Requires an external clock source from a data communications (DCE) device.
- Provides RS232-C type E interface.
- Connector: 25-pin, female, D-sub.

Proteon RS449 Interface (includes cable) (DETAB-AF) Features

- Single full-duplex, synchronous port with modem control.
- Operates at up to 64 Kb/s at 200 feet (61 m).
- Requires an external clock source from a data communications (DCE) device.
- Provides RS422 electrical interface with RS449 interface circuits.
- Connector: 37-pin, male, D-sub.

Proteon V.35 Interface (includes cable) (DETAB-AG) Features

- Single full-duplex, synchronous port with modem control.
- Provides 56 Kb/s interface per AT&T PUB 41450.
- Requires an external clock source from a data communications (DCE) device.
- Provides CCITT V.35 electrical interface.
- Connector: 34-pin, female, V.35.

Proteon X.25 Interface (DETAB-AH) Features

- Dual synchronous X.25 ports available on interface.
- Provides Public Data Network (PDN) X.25 and Defense Data Network (DDN) X.25 connectivity.
- Operates at speeds up to 64 Kb/s on each port.
- Requires an external clock source from a data communications (DCE) device.
- Interface conforms to the 1984 CCITT X.25 frame and packet layers.
- Ports accommodate adapter cables for RS232, RS449, and V.35.

CNX 500 Bridging Router Base Systems

The CNX 500 Bridging Router is a high-performance, RISC-based bridging router that sets the standard for enterprise-wide internetworking. The CNX 500 increases network efficiency, manages the overall performance of your network and provides Token Ring network integration for mixed LAN/WAN environments.

The CNX 500 supports 802.5/Token Ring, 802.3/Ethernet, and FDDI backbone connectivity.

Features

- Supports distributed routing over industry-standard 4 Mb/s or 16 Mb/s, or FDDI backbones.
- Supports industry-leading protocols (see CNX 500 Supported Protocols Table).
- Supports industry-standard SNMP.
- Managed via DECmcc SNMP AM V1.1.
- Full range of LAN/WAN support for enterprise-wide connectivity (check with local sales office for PTT approvals).
- Watchdog timer increases network availability.
- Event logging system, customized event/error reporting.

CNX 500 Supported Protocols

The following table contains a list of the protocols that are supported by the CNX 500.

CNX 500 Bridging Router Base Systems Supported Protocols

LAN/Backbone	WAN	Multiprotocol	Bridging	Network Management
802.3/Ethernet	T1/E1	NetWare IPX	Source Routing Bridging (SRB)	SNMP MIB II
802.5/Token Ring 4 Mb/s or 16 Mb/s	64 Kb/s	TCP/IP	Spanning Tree Bridging (ST)	
FDDI	Frame Relay	OSI (ES-IS)		
	SDLC	DECnet Phase IV		
	X.25	XNS (3Com, Xerox, UB)		
		AppleTalk		
		Apollo Domain		

Specifications	
Physical Characteristics	
Height	16.5 cm (6.5 in)
Width	41.9 cm (16.5 in)
Depth	41.4 cm (16.3 in)
Weight	18.1 kg (40 lbs)
Power Requirements	
Input voltage	85 Vac to 270 Vac
Input frequency	50 Hz to 60 Hz
Power consumption	240 Watts maximum
Operating Environment	
Operating temperature	15° C to 40° C (59° F to 104° F)
Operating humidity	5% to 95% (noncondensing)
Connectors*	One EIA-RS232, male DB 25 for local console and IEC-320 line cord connector, COMI
Performance	25,000 packets per second
I/O ports (slots)	Three
Configuration options	Six LAN max Six WAN max Three FDDI
Power Cord	Universal Adapter
* Requires VT100 compatible or PC terminal emulation software for initial configuration.	

Prerequisite Hardware

Communications interfaces: Some combination of T1 dual-port serial line, 802.3/Ethernet, 802.5/Token Ring, or FDDI.

Prerequisite Software

CNX 500 Bridging Router System Software V12.1

Configuration Guidelines for CNX 500

All CNX 500 systems require TFTP software on an IP host for downline loading.

X.25 systems for the CNX 500 only include the software. The T1/E1 High-Speed Interface (DETCB-AC) and choice of level converter are required to support X.25 connections on the CNX 500 and must be ordered separately.

CNX 500 preconfigured systems with SDLC require the T1/E1 High-Speed Interface (DETCB-AC) and a choice of level converter. These must be ordered separately. The level converter of choice will be bundled with the T1/E1 Interface (DETCB-AC).

Ordering Information

The CNX 500 Base Systems includes TCP/IP and Source Routing and Spanning Tree Bridging as part of the systems software.

The preconfigured CNX 500 packaged systems include the base system hardware and software plus DECnet, IPX, and an optional Protocol Forwarder (XNS, SDLC, Frame Relay, AppleTalk, Apollo Domain, or ES–IS). Customers can order each system with the software preconfigured and automatically get a wide combination of software protocols which are supported on 802.5/Token Ring networks. Optional protocols are included at no extra cost.

The network interface options — Ethernet, Token Ring, T1/E1, or serial lines — are *not* bundled into the systems and *must be ordered separately,* giving customers more flexibility in configuring their networks. Cables for the interface options must be ordered separately unless otherwise specified.

The following table lists the part numbers for the base systems and for the different preconfigured bridging router systems that are available for 802.5/Token Ring networks.

CNX 500 Order Codes

Option	Order Code
Base System Hardware with System Software, TCP/IP, Source Routing and Spanning Tree Bridging	DETCE-AA
Preconfigured CNX 500 Packaged Systems (Includes Base System Hardware/Software)	
DECnet IV, IPX and XNS	DETCE-CA
DECnet IV, IPX and Frame Relay	DETCE-DA
DECnet IV, IPX and SDLC	DETCE-EA
DECnet IV, IPX and OSI (ES–IS)	DETCE-FA
DECnet IV, IPX and AppleTalk	DETCE-GA
DECnet IV, IPX and Apollo Domain	DETCE-HA
DECnet and IPX	DETCE-JA
DECnet	DETCE-KA

The following table lists the part numbers for the base systems with X.25 capabilities and for the different preconfigured bridging router systems that are available for 802.5/Token Ring networks.

CNX 500 with X.25 Order Codes	
Option	**Order Code**
Base System Hardware with System Software, X.25, TCP/IP, Source Routing and Spanning Tree Bridging	DETCF-AA
Preconfigured CNX 500 Packaged Systems (Includes Base System Hardware/Software)	
DECnet IV, IPX and XNS	DETCF-CA
DECnet IV, IPX and Frame Relay	DETCF-DA
DECnet IV, IPX and SDLC	DETCF-EA
DECnet IV, IPX and OSI (ES–IS)	DETCF-FA
DECnet IV, IPX and AppleTalk	DETCF-GA
DECnet IV, IPX and Apollo Domain	DETCF-HA
DECnet and IPX	DETCF-JA

CNX 500 Optional Interface Line Cards and Level Converters

The following table lists the different CNX 500 Optional Line Cards, Level Converters, and associated order codes.

CNX 500 Optional Interface Line Cards and Level Converters Order Codes	
Option	**Order Code**
CNX 500 Ethernet Interface	DETCB-AA
CNX 500 Token Ring Adapter	DETCB-AB
CNX 500 Dual Port Serial T1/E1 Interface	DETCB-AC
RS232-C Level Converter	DETCB-AE
RS449 Level Converter	DETCB-AF
V.35 Level Converter	DETCB-AG
X.21 Level Converter	DETCB-AH
Dual Ethernet Interface	DETCB-AL
FDDI Interface 50 micron	DETCB-AJ
FDDI Interface 62.5 micron	DETCB-AD

CNX 500 Ethernet Interface (DETCB-AA) Features

- Supports spanning tree bridging.
- Compatible with Ethernet V1.0 or V2.0.
- Jumper-compatible in the field with Ethernet V1.0 and V2.0, Ethernet 802.3 (10Base5), and IEEE 802.3 (10Base2 ThinWire Ethernet).
- Connectors: 15-pin female D-sub, and BNC.

CNX 500 Token Ring Interface (DETCB-AB) Features

- Conforms to IEEE 802.5 specifications for 4/16 Mb/s Token Ring and interoperates with IBM Token Ring network.
- Supports both shielded and unshielded twisted-pair.
- Connectors: RJ-45, and 9-pin D-sub.

CNX 500 Dual Port Serial T1/E1 Interface (DETCB-AC) Features

- Single high-speed or dual medium-speed synchronous lines.
- Single line with maximum line speed of 2.048 Mb/s on one port.
- Dual line with maximum line speed of 2.048 Mb/s on both ports.
- Requires an external clock source from a data communications equipment (DCE) device.
- Ports accommodate level converters for RS232, RS449, X.21, and V.35.
- Port 0 is the default when using one port only.

Level Converters Options (Minimum One, Must Be Specified)

Model Number	Interface	Features
DETCB–AE	RS232-C	25-pin, male, D-sub, EIA RS232-C type E
DETCB–AF	RS449	37-pin, male, D-sub, EIA RS449
DETCB–AG	V.35	15-pin, male, D-sub, CCITT X.21
DETCB–AH	V.X.21	Rectangular 34-pin, female CCITT V.35

CNX 500 Dual Ethernet Interface (DETCB-AL) Features

- Supports spanning tree bridging.
- Two AUI connectors 15-pin female D-sub for 10Base5 interfaces.

CNX 500 FDDI Interface (DETCB-AD 62.5 Micron; DETCB-AJ 50 Micron) Features

- Dual attach or single attach (via DECconcentrator 500).
- SMT Rev. 6.2 compatible.
- Intel i960 RISC bridging accelerator.
- 256 KB onboard packet buffer.
- CMT, SMT, and LLC diagnostics software.
- SNMP network management.

Series 70 STP and UTP MAUs with Fiber Support

The Series 70 STP and UTP MAU base platforms, DETDA-BA and DET-DA-CA, in this section are sometimes referred to as Intelligent Wire Centers (IWCs). The operation of these IWCs requires the use of external power supplies.

If you are operating in a UTP environment, you can use the DETDB-BA UTP, DETDB-AA STP, or DETDB-CA Fiber Link Pair options. These options can be used to connect the Ring-In/Ring-Out connections to other IWCs in a 4 Mb/s or 16 Mb/s network.

If you are operating in an STP environment, you can use either the DETDB-AA STP Link Pair option or the DETDB-CA Fiber Link Pair option to connect the Ring-In/Ring-Out connections to other IWCs in a 4 Mb/s or 16 Mb/s network.

To order a preconfigured IWC, you must order the DETDC-AA option in addition to the base platform and link pairs.

Features

- One switch and LED for each node and link connector.
- Packaged platform.
- UTP base platform has eight RJ-45 node connectors.
- STP base platform has eight 802.5/Token Ring node connectors.
- Enhanced network management capabilities by in-band and out-band monitoring.
- Rackmountable.
- Supports 4 Mb/s or 16 Mb/s UTP, STP, and fiber.
- Compatible with Open DECconnect cabling system.

Specifications	
Physical Characteristics	
Height	6.6 cm (2.6 in)
Width	48.26 cm (19.0 in) — bezel
	44.45 cm (17.5 in) — unit
Depth	19.05 cm (7.5 in) — bezel
Power Requirements	External power supplies must be used
Operating Environment	
Operating temperature	5° C to 40° C (41° F to 104° F) at air inlet
Operating humidity	8% to 90% noncondensing
Connectors	Rear — RJ-11 out-band network management connections via Token ViewPlus
	Front — RJ-45 Token Ring connections
Mounting	Standard rackmount — height: 6.5 cm (2.5 in), width: 48.26 cm (19.0 in)

Ordering Information

Intelligent Wire Center Order Codes	
Option	**Order Code**
IWC (STP) base platform	DETDA-BA
IWC (UTP) base platform	DETDA-CA
IWC link pair (UTP)	DETDB-BA
IWC link pair (STP)	DETDB-AA
IWC link pair (Fiber)	DETDB-CA
Preconfigured Option	DETDC-AA

Note: The DETDB-AA Link Pair can be used with both base platforms. The DETDB-BA Link Pair can only be used with the DETDA-CA base platform.

Series 70 Workgroup Wire Center (WWC)

The Series 70 Workgroup Wire Center, DETDA-AA, is a wire center that expands Series 70 networks from 4 to 32 nodes on a 4 Mb/s or 16 Mb/s 802.5/Token Ring network over UTP.

Features

- Used with DETDA-CA Intelligent Wire Centers or as standalone 4-port MAU.
- Simple and cost-effective UTP expansion.
- Comes with panel/wall mounting bracket, Velcro and rubber footing.
- All RJ-45 connectors.
- 4 Mb/s or 16 Mb/s over UTP.
- LEDs provide at-a-glance wire center operational status.
- Physical switches control network connections.

Specifications	
Physical Characteristics	
Height	4.06 cm (1.6 in)
Width	10.92 cm (4.3 in) — bezel
Depth	16.76 cm (6.6 in) — bezel
Power Requirements	Use either a 7134-AA or a 7135-AA external power supply
Operating Environment	
Operating temperature	5° C to 40° C (41° F to 104° F) at air inlet
Operating humidity	8% to 90% noncondensing
Connectors	RJ-45 front panel connectors
Mounting	Panel/wall

Ordering Information

Workgroup Wire Center Order Code	
Option	**Order Code**
Workgroup Wire Center	DETDA-AA

Series 70 Unit Power Supplies

The Series 70 Unit Power Supplies (H7134-AA and H7135-AA) provide regulated output voltage for proper MAU operation. They can support up to two MAUs.

Features

- Easy installation.
- Provides power for up to two IWCs (cannot be used to power wire centers containing fiber optic options).
- International power supply includes Universal IEC connector for ac line cord.

Specifications	
Physical Characteristics	
Height	14.99 cm (5.9 in)
Width	8.0 cm (3.15 in)
Depth	7.87 cm (3.1 in)
Power Requirements	
Input voltage	120 V to 240 V
Input frequency	50 Hz to 60 Hz nominal
Operating Environment	
Operating temperature	5° C to 40° C (41° F to 104° F)
Operating humidity	8% to 90% noncondensing
Power Cord	U.S. line cord provided Wall plug not supplied
Certification	FCC class A, UL, CSA TüV certified to IEC 380 and IEC 435

Ordering Information

Unit Power Supplies Order Codes	
Option	**Order Code**
U.S. Unit Power Supply	H7134-AA
International Unit Power Supply	H7135-AA

Series 70 Group Power Supply

The Series 70 Group Power Supply provides regulated output voltages for proper MAU operation. The Series 70 Group Power Supply can support up to five MAUs.

Features

- Easy installation.
- Can power up to five UTP or STP MAUs.
- International power supply includes universal IEC connector for ac line cord.

Specifications	
Physical Characteristics	
Height	17.78 cm (7 in)
Width	9.53 cm (3.75 in)
Depth	11.43 cm (4.5 in)
Capacity	Supports up to five MAUs
Power Requirements	
Input voltage	90 Vac to 264 Vac single-phase universal input
Input frequency	50 Hz to 60 Hz
Operating Environment	
Operating temperature	5° C to 40° C (41° F to 104° F)
Operating humidity	8% to 90% noncondensing
Power Cord	U.S. line cord provided

Ordering Information

Group Power Supply Order Code	
Option	**Order Code**
Group Power Supply	H7138-AA

Series 70 External Power Supplies

The Series 70 External Power Supply provides regulated output voltages for a Workgroup Wire Center (WWC). The External Power Supply supports up to five WWCs.

Features

- Easy installation.
- Can power up to five WWCs.
- International power supply includes Universal IEC connector for ac line cord.
- Not required when the DETDA-AA WWC is connected to a Series 70 UTP MAU (DETDA-CA) using a Level 5 UTP office cable.
- Works only with DETDA-AA WWC.

Specifications	
Physical Characteristics	
Height	7.37 cm (2.9 in)
Width	5.84 cm (2.3 in)
Depth	5.84 cm (2.3 in)
Capacity	Supports up to five WWCs
Power Requirements	
Input Voltage	120 V to 240 V
Input frequency	50 Hz to 60 Hz nominal
Operating Environment	
Operating temperature	5° C to 40° C (41° F to 104° F)
Operating humidity	8% to 90% noncondensing
Power Cord	U.S. line cord or universal adapter provided
Certification	FCC class A, UL, CSA, TüV

Ordering Information

External Power Supplies Order Codes	
Option	**Order Code**
External Power Supply (U.S.)	H7136-AA
External Power Supply (International)	H7137-AA

MAU Connectivity

Multistation Access Units (MAUs) can be connected in a variety of ways. The following figure shows how multiple MAUs can be connected in an 802.5/Token Ring environment.

MAU Connectivity

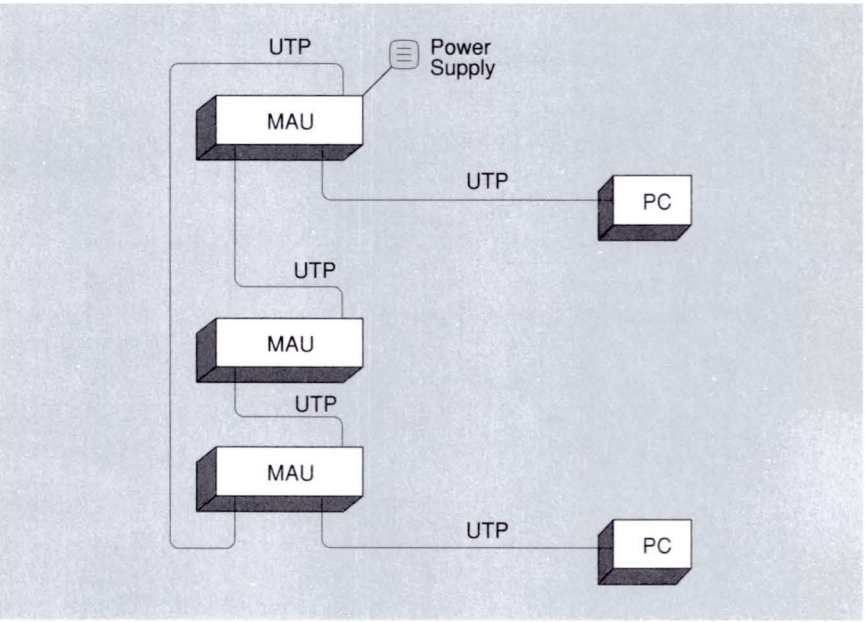

TBG-173-00

MAU and WWC Connectivity

The following figure shows how the MAU and the WWC can be connected in an 802.5/Token Ring environment.

This example is typical of how UTP networks can be expanded by using the MAU and WWC.

MAU and WWC Connectivity

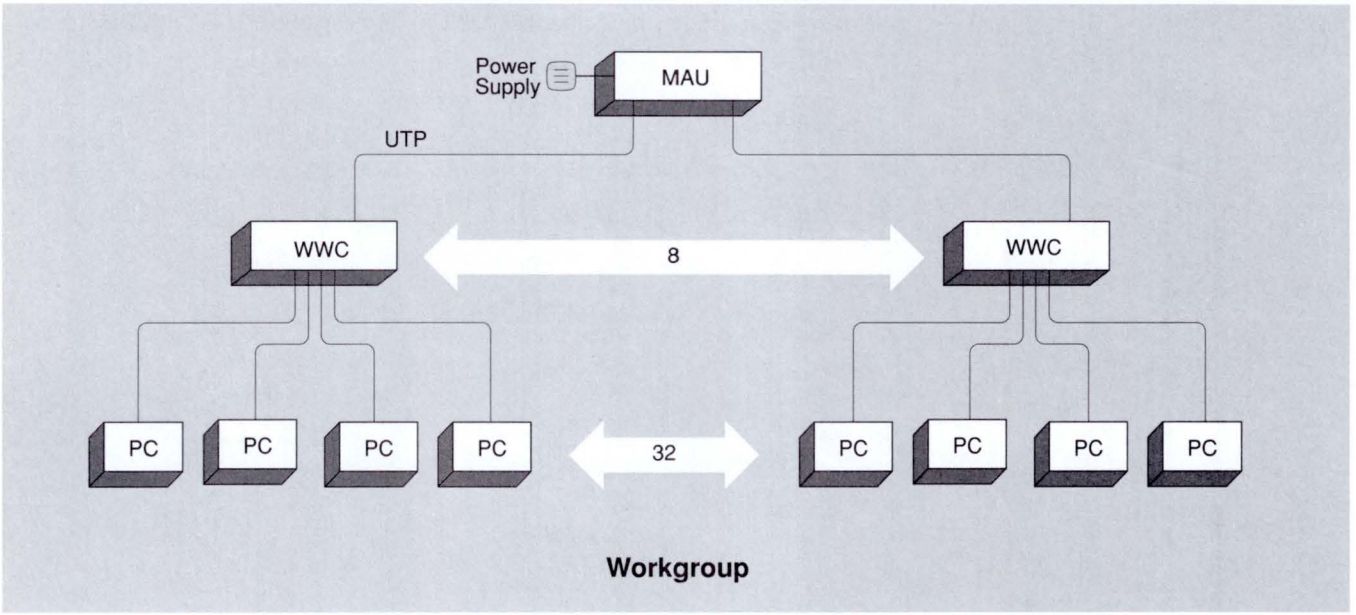

TBG-172-00

WWC Connectivity

WWCs can be connected in a small work group environment. The following figure shows how a WWC can be connected in an 802.5/Token Ring environment in a typical small WWC UTP network connection.

WWC Connectivity

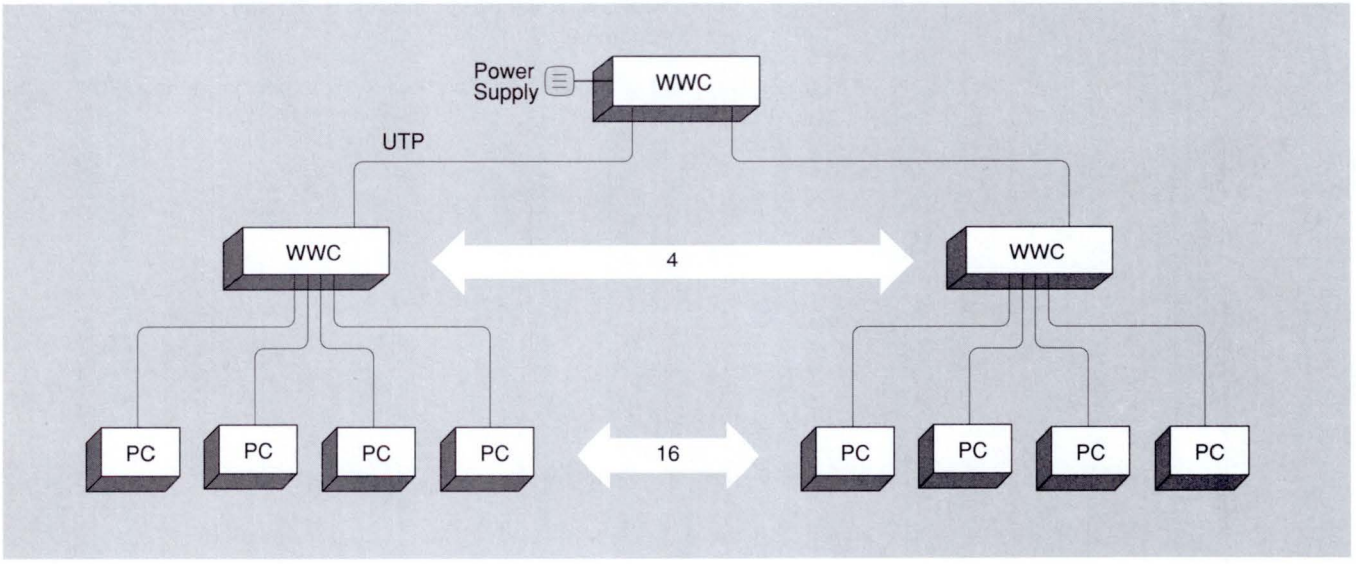

TBG-171-00

Configuration Guidelines

Troubleshooting Questions and Answers

Question:

How many Workgroup Wire Centers (WWC) can you drive from the UTP Multistation Access Unit (MAU)?

Answer:

Recommended practice is to drive a maximum of eight WWCs from one UTP MAU provided that there are no fiber RI/RO link ports. If there are fiber RI/RO ports (even if it's only one), a maximum of four WWCs can be connected to the MAU.

Question:

How many tiers (or cascades) of WWCs can you drive from a MAU?

Answer:

There is support for only one cascade of WWCs from the MAU.

Question:

How many tiers (or cascades) of WWCs can you drive from a WWC with a power supply?

Answer:

Again, there is support for only one cascade of WWCs from another WWC.

Question:

What are cable distances/restrictions in meters for the above configurations?

Answer:

Please refer to Section 4, "Communications Cables."
▲ For more detailed information refer to

OPEN DECconnect Building Wiring Components and Applications Catalog.

Order number: EC–I1834–29
Catalog Code: CDB

Digital to IBM communications products range from single-function, point-to-point protocol emulation to multifunction network-to-network communication via an IBM channel.

Digital offers three transport products that provide DECnet connection to the SNA environment. All three products support Multiple Virtual Storage/System Product (MVS/SP) and Multiple Virtual Storage/Extended Architecture (MVS/XA), Virtual Machine (VM — both /SP and /XA), and Virtual Storage Extended/System Product (VSE/SP) operating systems. The products fit into three price/performance tiers.

- VMS SNA is a software product, layered on the VMS operating system, that provides a system-to-network connection over a synchronous communications line. It is suitable for low-volume applications that run on a single system and require a single, direct link to the SNA environment.
- DECnet SNA Gateway for Synchronous Transport is software that runs on the DEC MicroServer (or DEC MicroServer-SP) dedicated server hardware that provides network-to-network communications. It connects a DECnet 802.3/Ethernet local area network to as many as four remote SNA networks over synchronous communications lines. This product is suitable for medium traffic over a DECnet network to one or more IBM SNA systems.
- The DEC SNA Domain Gateway for Channel Transport is a functional enhancement to the DECnet SNA Gateway for Channel Transport. The Domain Gateway's high throughput and dedication to one high-speed IBM channel make it suitable for applications with heavy traffic between the DECnet and SNA environments. Its increased functionality allows users to access VMS applications.

In addition to the transport products that provide DECnet connection to the SNA environment, Digital offers a transport that provides TCP/IP connection to the SNA environment. Like the other DECnet SNA transport products, this product also supports MVS, VM, and VSE/SP operating systems.

ULTRIX SNA is a software product, layered on a RISC system, that provides a network-to-network connection over a synchronous SDLC or an X.25 line. It is suitable for low to medium traffic over a TCP/IP network to one or more IBM SNA systems.

The Digital to IBM SNA Transport Products described above require installation of the appropriate DECnet SNA Access Routines and Programming Interfaces. These products provide such functions as terminal and printer emulation, bidirectional data transfer, mail exchange, and remote job entry. ▲ Refer to "DECnet SNA Access Routines and Programming Interfaces" in this section for more information.

Digital's Binary Synchronous Communications (BSC) Protocol Emulator products provide point-to-point emulation between Digital and IBM systems and are designed to satisfy single-function Digital to IBM communication requirements. If the amount of communication between Digital systems and IBM mainframes is relatively low, BSC may be the appropriate connection method. Digital offers two types of IBM Internet products using the BSC technology — 3271 and 2780/3780 protocol emulation software.

PATHWORKS for DOS and PATHWORKS for OS/2 software products allow the IBM PC, PC/XT/AT systems (or PS/2 models), and selected compatibles to participate as non-routing end nodes in DECnet and 802.3/Ethernet computer networks. ▲ Refer to "DECnet Communications Software" in this section for more information.

DECnet SNA Environment

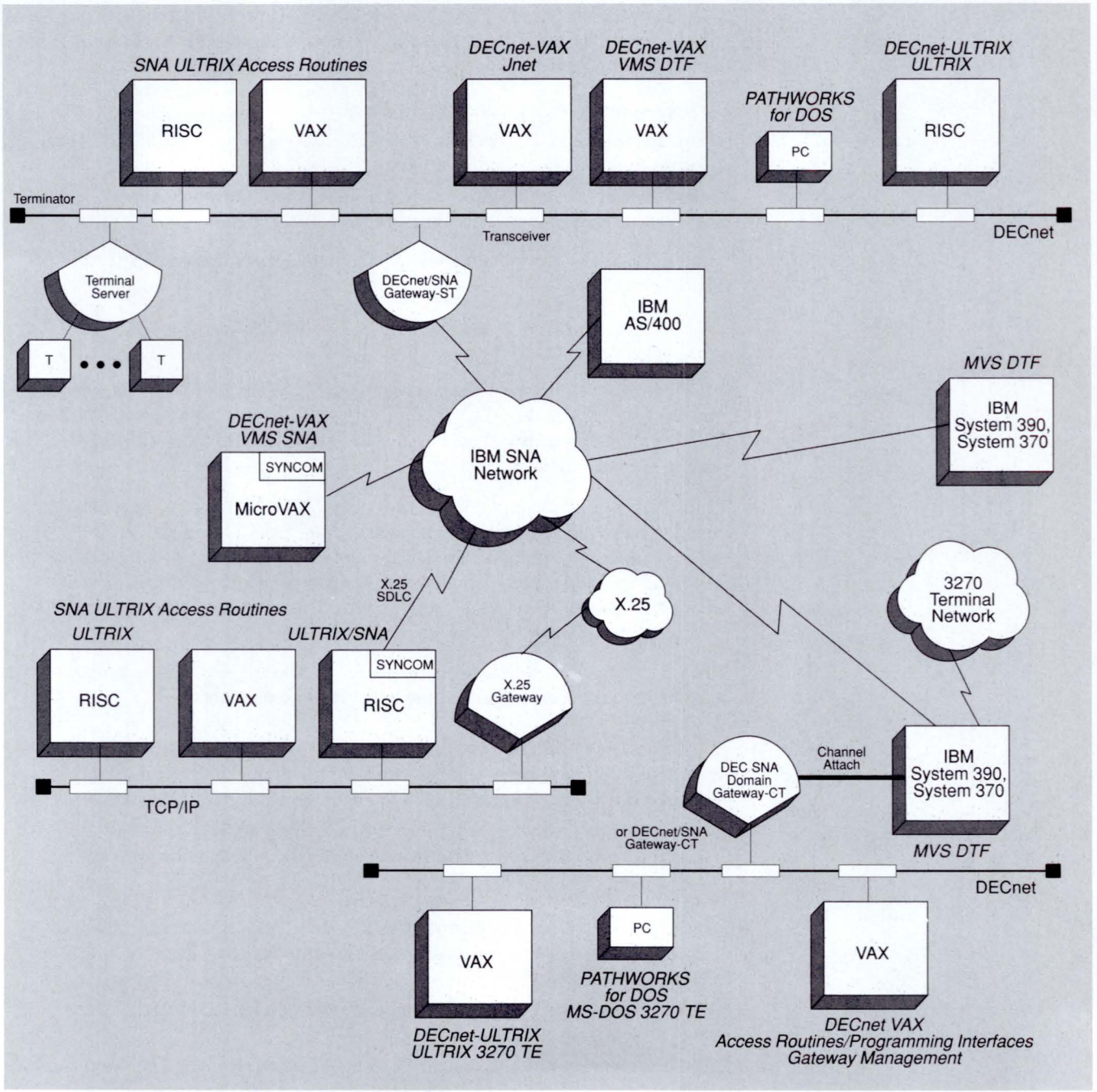

TBG–178-00

Other products are available for Digital to IBM communications: VIDA allows integration of data from DB2 on IBM mainframes with VAX databases, and the Jnet product suite facilitates information exchange and communications between Digital systems and IBM midrange systems.

Comparison of DEC SNA Domain Gateway and DECnet SNA Gateway Products

The DEC SNA Domain Gateway is a functional enhancement to the DECnet SNA Gateway-CT. The Domain Gateway is a PU Type 5, while the DECnet SNA gateways are PU Type 2.0. Because it is Type 5, the gateway should be used in the following situations:

- For high-volume, high-production environments
- When the customer has a need for their IBM 3270 terminal users and PC users to log on to applications on the VAX
- When the customer wants to offload their IBM mainframe application development backlog and write programs in a VMS environment

All of these actions are possible with the Domain Gateway using 3270 Application Services.

Comparison of VMS SNA and DECnet SNA Gateway Products

The DECnet SNA transport products — VMS SNA, DECnet SNA Gateway for Synchronous Transport (-ST), and DECnet SNA Gateway for Channel Transport (-CT) — allow bidirectional communication between DECnet and IBM SNA systems and applications.

VMS SNA, a software product that runs on a VAX VMS system, provides system-to-network connection with the same functions as the DECnet SNA Gateway products (except for the Distributed Host Command Facility, discussed later in this section). The DECnet SNA Gateway products provide dedicated service between the DECnet network and the SNA network, relieving the VMS systems from managing this task.

When deciding which product is suitable for a customer site, it is helpful to consider both the application and the operating environment.

Suitable Applications for VMS SNA

- Remote offices requiring both independent computing resources for office applications and access to an information database on the IBM mainframe.
- Government command and control systems requiring a link to the IBM mainframe for transfer of military information from mobile units.

Suitable Applications for the DECnet SNA Gateway Products

- Installations with Digital department-level systems and IBM systems. The department-level systems are linked via DECnet to the SNA network with a DECnet SNA Gateway.
- Sites (with more than one Digital computer) that require access to the SNA network.
- IBM 3270 users requiring access to VMS applications (Domain Gateway)
- High-speed file transfer between Digital and IBM environments.

Suitable Environments for VMS SNA

- A large SNA network with a small number of VAX systems.
- A large SNA network and geographically dispersed single VAX systems, each requiring a separate link to the SNA network.

Suitable Environments for the DECnet SNA Gateway Products

- A large DECnet network with users who require access to the SNA network for a significant portion of their work day.
- Multiple DECnet networks with users who require occasional access to the SNA network.
- Users who require connections to multiple SNA networks.
- Heavy VAX usage that requires offloading network capabilities to a communications server.
- IBM 3270 users requiring access to VMS applications (Domain Gateway)

Summary of 802.3/Ethernet Gateways

Product	**DECnet SNA Gateway SP100**	**DECnet SNA Gateway-CT**	**DEC SNA Domain Gateway-CT**	**DECnet SNA Gateway-ST**
Hardware Type	DEMSB	DESNB	DESNB	DEMSA
Number of Lines/ Maximum Throughput	1 at 19.2 Kb/s	1 at channel speed	1 at channel speed	1 at 256 Kb/s, 2 at 128 Kb/s, 4 at 64 Kb/s
MultiCPU Access	Yes	Yes	Yes	Yes
Modem Control	Full		Full	Full
Protocols	Synchronous SDLC	Channel	Channel	Synchronous SDLC
Downline Load Host Support	DECnet VAX DECnet ULTRIX	DECnet VAX DECnet ULTRIX	DECnet VAX	DECnet VAX DECnet ULTRIX
Operational Host Support	VMS, ULTRIX, MS-DOS	VMS, ULTRIX, MS-DOS	VMS, ULTRIX, MS-DOS	VMS, ULTRIX, MS-DOS
Primary Buying Reason	PC LAN access to IBM SNA network over synchronous communications lines	High-end DECnet SNA transport provides channel connection for communications	High-end DECnet SNA transport provides channel connection for communications; Enables IBM 3270 terminals and PCs to connect to VAX applications	Connects an 802.3/Ethernet LAN to as many as four IBM SNA networks over synchronous communications lines

Comparison of VMS SNA and DECnet SNA Gateway Capabilities

VMS SNA	DECnet SNA Gateway-ST	DECnet SNA Gateway-CT	DEC SNA Domain Gateway
System-to-network connection	Network-to-network connection	Network-to-network connection	Network-to-network connection
Single line at speeds up to 64 Kb/s	Up to four lines[1], up to 256 Kb/s[2]	Direct channel speed (typically 3 to 4 Mb/s)	Direct channel speed (typically 3 to 4 Mb/s)
Supports up to 64 concurrent sessions depending upon CPU	Supports up to 128 concurrent sessions[3]	Supports 1,020 concurrent sessions	Supports 1,020 concurrent sessions
Supported on VMS-based VAX systems with appropriate synchronous communications hardware (except UNIBUS)	802.3/Ethernet-based, supported on VMS or ULTRIX-based VAX systems	802.3/Ethernet-based, supported on VMS or ULTRIX-based VAX systems	802.3/Ethernet-based, supported on VMS systems
Supports DECnet SNA Access Routines except Distributed Host Command Facility, MS-DOS 3270 Terminal Emulator, and ULTRIX 3270 Terminal Emulator	Supports DECnet SNA Access Routines and Programming Interfaces; gateway management uses DECnet tools	Supports DECnet SNA Access Routines and Programming Interfaces; gateway management uses DECnet tools	Supports DECnet SNA Access Routines and Programming Interfaces; gateway management uses DECnet tools

[1] When using DEC MicroServer-SP hardware, one line is supported. When using DEC MicroServer hardware, up to four lines are supported.

[2] When using DEC MicroServer-SP hardware, line speeds up to 19.2 Kb/s are supported. For the DEC MicroServer configurations, line speeds up to 256 Kb/s (aggregate) are supported.

[3] When using DEC MicroServer-SP hardware, up to 32 sessions are supported. When using DEC MicroServer, 128 sessions are supported.

DEC ChannelServer II

The DEC ChannelServer II represents the high-end of the DECnet SNA Gateway product family and provides the hardware base for the DECnet SNA Gateway for Channel Transport (DECnet SNA Gateway-CT). The DEC ChannelServer II attaches directly to both the Ethernet local area network and an IBM S/370 Byte Multiplexer, Block Multiplexer, or Selector Channel.

For the DECnet SNA Gateway-CT and -ST, the DEC ChannelServer is defined to the I/O subsystem as either a 3174-1L or 3790 communications controller and is defined to VTAM as a Physical Unit Type 2.0. For the DEC SNA Domain Gateway, the DEC ChannelServer is defined to VTAM as an independent subarea domain. The ChannelServer supports a single pair of Bus and Tag connectors and is capable of accessing information on any mainframe defined to the SNA network regardless of its location. By using the SNA network, a single DEC ChannelServer can access applications, files, and documents simultaneously on multiple mainframes in either central or distributed locations.

The DEC ChannelServer consists of a MicroVAX 3800 enclosed in a DS550 OEM cabinet. It connects to the Ethernet LAN through a DESQA controller and connects to the S/370 through a three-card Q-bus option with driver/receiver panel. ▲ For more information, refer to "DECnet SNA Gateway-CT" in this section.

DEC ChannelServer II Specifications	
Physical Characteristics	
Height	67 cm (26.5 in)
Width	53 cm (21 in)
Depth	46 cm (18 in)
Weight	32 kg (80 lbs)
Power Requirements	120 Vac to 240 Vac
Low-range line voltage	88 to 256 Vac
High-range line voltage	Single
Frequency	50 to 60 Hz
Steady state current (typ)	2.2 A to 4.4 A
Steady state current (max)	3.0 A to 6.0 A
Power consumption (max)	320 W to 345 W
Environmental Class	A (Refer to Appendix C for details.)

Prerequisite Hardware

- Any VAX, MicroVAX, or VAXstation configuration as specified in the order code table can act as the load host.
- S/370 Bus and Tag cables (terminators if appropriate) for connection into the X/370 system.

Note: The DEC ChannelServer II has a built-in Ethernet communications controller. It needs a suitable connection to the user's Ethernet LAN and transceiver cables.

Prerequisite Software

- VMS operating system V5.x or ULTRIX operating system V4.x
- DECnet VAX V5.x or DECnet ULTRIX V4.x

Ordering Information

The DEC ChannelServer II is packaged and ordered as a complete DECnet SNA Gateway-CT system. ▲ Refer to the DECnet SNA Gateway-CT product description to order the package.

Refer to the order codes below only when ordering spare hardware. Note that the options listed below do not include cables, licenses, or documentation.

DEC ChannelServer Spare Hardware Order Codes	
Option	**Order Code**
DEC ChannelServer II configured for 120 Vac	DESNB-AA
DEC ChannelServer II configured for 240 Vac	DESNB-A3

DECnet SNA Gateway for Channel Transport

DECnet SNA Gateway for Channel Transport (DECnet SNA Gateway-CT), a high-end member of the DECnet SNA Transport family, is software that runs on the DEC ChannelServer II dedicated server hardware. The DECnet SNA Gateway-CT operates as part of both the DECnet and SNA networks, allowing users anywhere in either the SNA or DECnet network to share systems, applications, and network resources.

DECnet SNA Gateway-CT is defined to VTAM as a Physical Unit Type 2.0 and can be configured with up to four Physical Unit Type 2.0 SNA Network definitions each with a maximum of 255 Logical Units. Also, it supports a maximum of 1,020 simultaneous sessions. Compatible with IBM MVS, VSE/SP, and VM operating systems, DECnet SNA Gateway-CT also supports all existing DECnet SNA Access Routines for VMS, ULTRIX, and MS-DOS systems.

DECnet SNA Gateway-CT software is downline loaded across an Ethernet network into the DEC ChannelServer from a suitably configured VMS for VAX or ULTRIX load host system.

DEC ChannelServer II

The DEC ChannelServer II provides the hardware base for the DECnet SNA Gateway-CT, and attaches directly to both the Ethernet local area network and an IBM S/370 Byte Mutliplexer, Block Multiplexer, or Selector Channel. ▲ Refer to the DEC ChannelServer II product description in this section and to Software Product Description 29.76 for further information.

DECnet SNA Gateway-CT Configuration

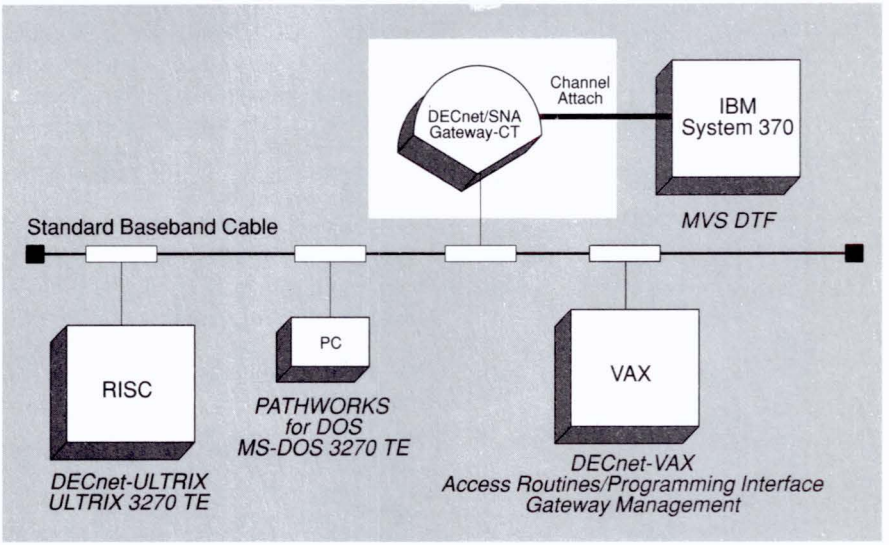

TBG–064-00

Features

- Up to 1,020 concurrent sessions allow many users and applications to be supported through a single DECnet SNA Gateway-CT.
- High-performance DECnet SNA Gateway-CT supports greater concurrent sessions and provides higher throughput than any other DECnet SNA Transport product.
- Direct S/370 channel attachment bypasses front-end processors and wide area networks.
- Compatibility with DECnet SNA Access Routines and Programming Interfaces eases migration from other transport products to DECnet SNA Gateway-CT.

Prerequisite Hardware

- Any VAX, MicroVAX, VAXstation, DECsystem or DECstation configuration as specified in the order code table.
- S/370 Bus and Tag cables (terminators if appropriate) for connection into the S/370 system.
- VTxxx terminal for DEC ChannelServer II diagnostic use.
- The DEC ChannelServer has a built-in Ethernet communications controller that needs transceiver cable and a suitable connection to the 802.3/Ethernet LAN.

Prerequisite Software

For the load host that will downline load the DECnet SNA Gateway-CT software:

- VMS operating system V5.2 or ULTRIX operating system V4.x
- DECnet VAX V5.2 or DECnet ULTRIX V4.x

Ordering Information

Order the DECnet SNA Gateway-CT Systems Package (DESNB-S*) which includes a DEC ChannelServer II hardware base, a power cord, and software licenses for DECnet SNA Gateway-CT. First-time purchasers of a DEC ChannelServer system require distribution and documentation kits for the DECnet SNA Gateway-CT software.

Note: DEC ChannelServer II diagnostics are shipped with the media.

The DECnet systems that access the SNA environment through the DECnet SNA Gateway-CT must be configured with the appropriate Access Routines or Programming Interfaces. ▲ For more information, refer to "DECnet SNA Access Routines and Programming Interfaces" in this section.

Bus and Tag cables are the responsibility of the customer and are not available from Digital.

DECnet SNA Gateway-CT Hardware Order Codes

Option	Order Code
DECnet SNA Gateway-CT package includes DEC ChannelServer hardware, power cord, DECnet SNA Gateway-CT License	DESNB-S*

* Fill in one of the following codes for the appropriate country: A (United States, Japan, Mexico), E (United Kingdom), G (Germany), I (Italy), K (Switzerland), P (France), T (Israel), X (Austria, Belgium, Finland, Netherlands, Norway, Sweden, Portugal, Spain)

▲ Refer to the following sources for further information on supported processor and services:

- Software Product Description 29.76
- Unique Product Identifier VC9

DEC SNA Domain Gateway for Channel Transport

The DEC SNA Domain Gateway for Channel Transport is a functional enhancement to the DECnet SNA Gateway for Channel Transport (DECnet SNA Gateway-CT), the highend members of the DEC SNA Transport family. The Domain Gateway is software that runs on the DEC ChannelServer II dedicated server hardware. The DEC SNA Domain Gateway CT operates as part of both the DECnet and SNA networks, allowing users to exchange information and share resources between suitably configured Digital systems in a DECnet environment and suitably configured IBM systems in a Systems Network Architecture (SNA) environment.

The DEC SNA Gateway-CT is functionally a superset of the DECnet SNA Gateway-CT product. The Domain Gateway fully supports existing access routines with the exception of the Distributed Host Command Facility (DHCF).

DEC SNA Domain Gateway-CT software is downline loaded across an Ethernet network into the DEC ChannelServer from a suitably configured VMS for VAX load host system. The Domain Gateway software product must be ordered in addition to the DEC ChannelServer hardware.

The Domain Gateway is configured and managed by the load host using the Gateway management software which is part of the Domain Gateway-CT product. The Gateway management software can be installed on as many Gateway management nodes as necessary.

DECnet SNA Domain Gateway Configuration

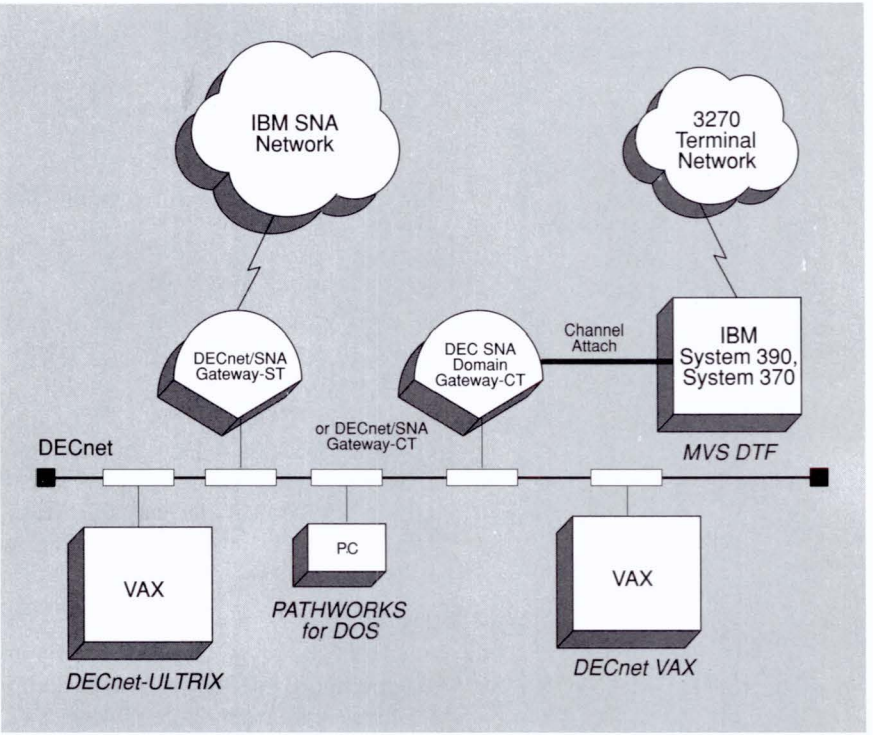

TBG–179-00

The Domain Gateway software is supported on two hardware platforms — the DEC ChannelServer (DESNA-Ax) and DEC ChannelServer II (DESNB-Ax). Both systems connect directly to an Ethernet local area network and an IBM S/3X0 Block Multiplexor. Channel type and address may be configured according to specifications listed in both the hardware and the software user documentation.
▲ Refer to the DEC ChannelServer II product description in this section for further information.

Features

- The Domain Gateway is a PU Type 5 SNA node. By defining the Domain Gateway as a PU Type 5 instead of a PU Type 2.0, VMS based applications can take on the role of primary logical units when communicating with IBM applications. This effectively enables a 3270 user to log onto a VMS application.
- The Domain Gateway is part of both the DECnet and the SNA networks. It is an ADVANTAGE-NETWORKS end node to DECnet and a Physical Unit Type 5 node to SNA. It provides bidirectional access between DECnet and SNA networks.
- The Domain Gateway supports 1,020 Sessions and a maximum of 1,024 Logical Units.

- High-performance DEC SNA Domain Gateway-CT supports greater concurrent sessions and provides higher throughput than any other DEC SNA Transport product.

Prerequisite Hardware

- Any VAX, MicroVAX, or VAXstation configuration as specified in the order code table.
- S/3x0 Bus and Tag cables (terminators if appropriate) for connection into the S/3x0 system.
- VTxxx terminal for diagnostic use.

Prerequisite Software

For the load host that will downline load the DEC SNA Domain Gateway-CT software:

- VMS Operating System V5.4
- DECnet VAX
- DECnet VAX Extensions

Ordering Information

Order the DEC SNA Domain Gateway-CT DESNB package which includes the DEC ChannelServer II hardware base, a power cord, and software licenses for the DEC SNA Domain Gateway-CT. Management software is included. Users of DECnet SNA Gateway-CT can order the Domain Gateway software via a software upgrade.

The DECnet systems that access the SNA environment through the DEC SNA Domain Gateway-CT must be configured with the appropriate Access Routines or Programming Interfaces. ▲ For more information, refer to DECnet SNA Access Routines and Programming Interfaces in this section.

Bus and tag cables are the responsibility of the customer and are not available from Digital.

DEC SNA Gateway-CT Hardware Order Codes

Option	Order Code
Domain Gateway Package (U.S.), includes: Channel Server II (DESNB-AA), Domain Gateway license (QL-MKHA9-AA), and 3270 Application Services (includes 2 concurrent use licenses QL-MKJAA-3B)	DESNB-CA
SNA Domain Gateway Package Same as above without ChannelServer II	QP-LBRAA-01
Domain Gateway License only	QL-MKHA9-AA

▲ Refer to the following sources for further information on supported processor and services:

- Software Product Description 38.69
- Unique Product Identifier MKH

DEC SNA VMS 3270 Application Services, V1.0

The DEC SNA VMS 3270 Application Services is a layered software product that enables IBM 3270 terminal and PC users in an SNA network to access transaction processing applications on Digital systems as block mode terminals.

The DEC SNA VMS 3270 Application Services provides a library of routines to call from a VMS application. The VMS application, which serves as a primary logical unit, can activate and accept sessions with remote 3270 devices.

VMS applications can be developed using the 3270 Application Services API.

The VMS 3270 Application Services integrates with DECforms for 3270 terminal support. DECforms for 3270 terminals allows application developers to design forms and build applications without knowledge of the 3270 data stream, SNA, or the DEC SNA 3270 Application Services API. (DECforms is Digital's implementation of the proposed ANSI/ISO standard for a Form Interface Management System (FIMS).)

Features

Programming Interface for 3270 Services provides the following functionality:

- Receives incoming LU Type 1, 2, and 3 connections.
- Initiates outgoing LU Type 1, 2, and 3 connections.
- Establishes sessions.
- Transmits and receives data.
- Terminates sessions.
- Implements the protocols for chaining, bracketing, responses, and session and data flow control.
- Maintains 3270 session characteristics through a VMS RDAn: device.
- Supports application programs written in any of the VMS programming languages that conform to the VMS Calling Standard.

VMS Print Queue

- The 3270 Application Services product provides a VMS print symbiont for printing local ASCII files on an SNA-attached LU Type 1 or LU Type 3 printer from a VMS print queue. The queue can be DQS served.

DECforms Support

- DECforms integrates with 3270 Application Services to provide 3270 terminal support. DECforms for 3270 terminals provides application developers software development tools and a runtime environment.

RDA Configuration

RDA devices can be preconfigured with 3270 session characteristics.

VAX VTX Support

Videotex provides application developers with a distributed information retrieval service that includes components for programming applications. The 3270 Application Services product integrates with a version of the VTX Terminal Control Program to enable VTX to be used without requiring an IBM host-based CICS application.

3270 Terminal Emulation (TE) Support

The 3270 TE provides a method for preliminary testing of incoming sessions by emulating the SLU side of a session. Testing is done on a single VMS system. The 3270 Terminal Emulation (TE) Support product requires the purchase of the Terminal Emulation separately.

Prerequisite Hardware

- A VAX, MicroVAX, or VAXstation configuration as specified in the System support Addendum (SSA 38.69.00)
- A properly configured DEC SNA Domain Gateway for Channel Transport as specified in the system Support Addendum (SSA 38.69.00).

Prerequisite Software

- VMS Operating System
- DECnet VAX
- DEC SNA Domain Gateway for Channel Transport (SPD 38.80.xx)

Ordering Information

DEC SNA 3270 Application Services Order Codes

Option	Order Code
DEC SNA 3270 Application Services (Development System)	
Clusterwide	QL-MKJA9-J
Concurrent Use	QL-MKJAA-3B
Personal Use	QL-MKJAA-2B
DEC SNA 3270 Application Services (Run-time System)	
Clusterwide	QL-MKKAA-3B
Concurrent Use	QL-MKKA9-J

▲ Refer to the following sources for further information on supported processors and services:

- Software Product Description 38.70
- Unique Product Identifier MKJ (Development System)
- Unique Product Identifier MKK (Run-time System)

DECnet SNA Gateway for Synchronous Transport

DECnet SNA Gateway for Synchronous Transport (DECnet SNA Gateway-ST) is software that runs on the DEC MicroServer or the DEC MicroServer-SP, dedicated server hardware that provides network-to-network communications. It connects a DECnet 802.3/Ethernet local area network to as many as four remote SNA networks over synchronous communications lines, depending upon hardware used. This product is suitable for medium traffic over a DECnet network to one or more IBM SNA systems.

The DECnet SNA Gateway-ST, the midrange member of the DECnet SNA Transport family, connects Digital and IBM networks using a wide variety of Digital Access Routines running under VMS, MS-DOS, and ULTRIX operating environments. DECnet SNA Gateway-ST is defined to Virtual Telecommunications Access Method (VTAM) as a Physical Unit Type 2.0 and can be configured with up to four Physical Unit Type 2.0 definitions, supporting up to 128 concurrent sessions. (Refer to the "Features" heading.)

DECnet SNA Gateway-ST software is downline loaded across an Ethernet network into the DEC MicroServer or the DEC MicroServer-SP from a suitably configured VMS or ULTRIX load host system. The DECnet SNA Gateway-ST is configured and managed by the load host using DECnet SNA Gateway Management utilities, which can be used to manage both DECnet SNA Gateway-ST and DECnet SNA Gateway-CT systems. ▲ For more information on the DEC MicroServer and the DEC MicroServer-SP, refer to Section 2, "802.3/Ethernet Communications Servers." For more information on the DECnet SNA Gateway-ST, refer to Software Product Description 25.C6.

DECnet SNA Gateway-ST Configuration

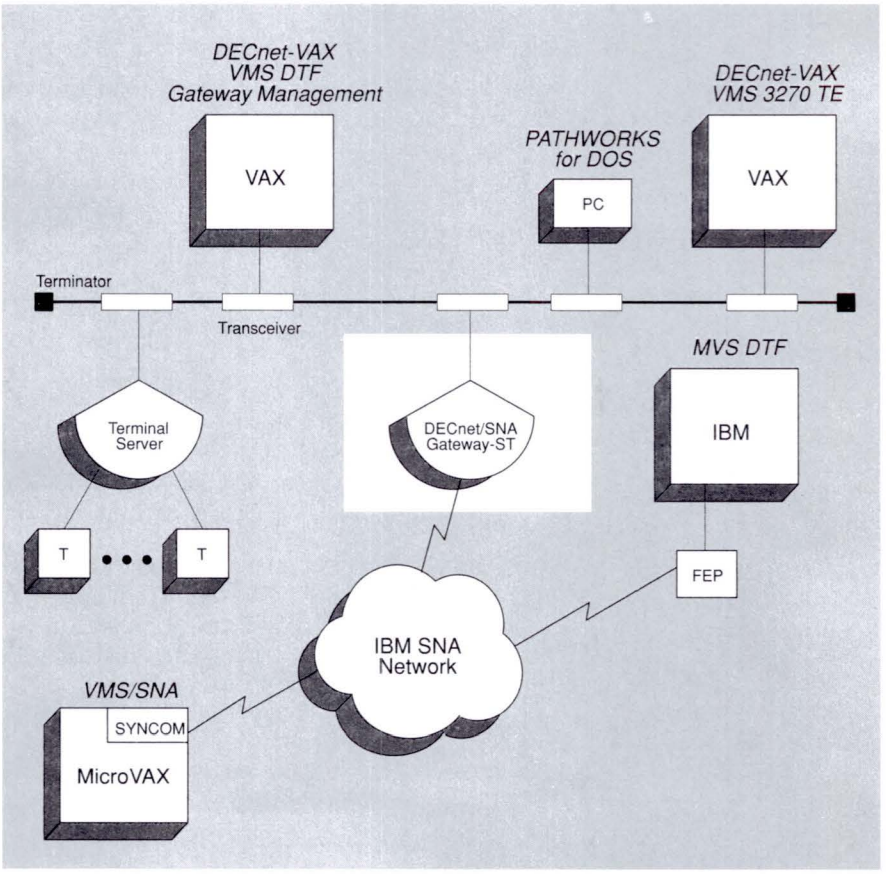

TBG–065-00

Features

- Supports all DECnet SNA Access Routines.
- When using the DEC MicroServer-SP:
  - Supports up to 16 concurrent sessions on one synchronous communications link.
  - Supports line speeds up to 19.2 Kb/s.
- When using the DEC MicroServer:
  - Supports up to 128 concurrent sessions and up to four synchronous communications links.
  - Operates at speeds up to 256 Kb/s for one line, 128 Kb/s for two lines, or 64 Kb/s for four lines.

Prerequisite Hardware

In Ethernet local area networks:

- VAX, MicroVAX, VAXstation, DECsystem or DECstation configuration as specified in the order code table.
- Bell System-compatible modems. ▲ Refer to SPD 25.C6 for approved models.

Prerequisite Software

- VMS operating system V5.0 to V5.2 or ULTRIX operating system V4.x
- DECnet VAX or DECnet ULTRIX V4.x

Ordering Information

Order the hardware base for the DECnet SNA Gateway-ST (DEMSA or DEMSB), which includes the license for the Gateway. If ordering DEMSA or DEMSB, software media and documentation are included as part of the package. ▲ For information on ordering the DECnet SNA Gateway Management V2.1 software, refer to its product description in this section.

The DECnet SNA Gateway-ST software is downline loaded across the Ethernet LAN from a suitably configured VAX or RISC system that acts as a load host. A copy of the DECnet SNA Gateway Management V2.1 software must be installed on this system. A single VAX or RISC system is capable of acting as a load host for multiple DECnet SNA Gateways of any type.

DECnet systems, requiring access to the SNA environment through the DECnet SNA Gateway-ST, must be configured with the appropriate access routines or programming Interfaces. ▲ For more information, refer to "DECnet SNA Access Routines and Programming Interfaces" in this section.

DECnet SNA Gateway-ST Hardware Order Codes	
Option	**Order Code**
DECnet SNA Gateway-ST package, includes DEC MicroServer hardware, two V.35 and two EIA-232 adapter cables, power cord, DECnet SNA Gateway-ST license with warranty (packages for Germany have two X.21 and two EIA-232 cables)	DEMSA-S*
DECnet SNA Gateway-ST package, includes DEC MicroServer-SP hardware, ThinWire Ethernet adapter, Ethernet cable, EIA-232 adapter cable, DECnet SNA Gateway-ST license with warranty, TK50 software media and documentation	DEMSB-S*
* Fill in one of the following codes for the appropriate country: A (United States, Mexico), D (Denmark), E (United Kingdom), G (Germany), I (Italy), K (Switzerland), P (France), T (Israel), X (Austria, Belgium, Finland, Netherlands, Norway, Sweden, Portugal, Spain)	

▲ Refer to the following sources for further information on supported processor and services:

- Software Product Description 25.C6
- Unique Product Identifier S01

DECnet SNA Gateway Management Utilities

Gateway management utilities provide configuration and management functions for the DECnet SNA Gateway for Synchronous Transport (DECnet SNA Gateway-ST) and DECnet SNA Gateway for Channel Transport (DECnet SNA Gateway-CT). Gateway management utilities are part of the DECnet SNA Gateway-ST and -CT software kits. ▲ Refer to the appropriate descriptions in this section for information on both products.

DECnet SNA Gateway Management utilities allow the gateway administrator to configure the software executing in the DECnet SNA Gateway-ST or DECnet SNA Gateway-CT system. They also allow the administrator to establish parameters relating to lines, circuits, physical units, logical units, and other variables necessary for network-to-network communications between the DECnet and SNA networks. Additionally, DECnet SNA Gateway Management allows the administrator to manage and to diagnose problems related to the DECnet SNA Gateway.

DECnet SNA Gateway Management utilities include the following fault isolation tools:

- A trace capability for use with the DECnet SNA Gateway(s) helps debug application programs and assists in identifying system problems. An operator can run a trace at the line/circuit, physical unit (PU), or session level, then format the data on a specified Digital system. This trace feature helps determine an error for remedial action.
- A "snapshot" monitoring utility displays the status of the Gateway's buffer availability, the number of SNA session currently in progress, and other information pertinent to both the DECnet and the SNA network on a Digital host-controlled terminal.

- If an irrecoverable error occurs during operation of the DECnet SNA Gateway system, a memory image may be dumped to a designated Ethernet-attached VAX host.

Features

- Simple configuration procedure — After installing DECnet SNA Gateway software (on a load host) and DECnet SNA Gateway Management software, the administrator runs a single configuration procedure appropriate for the type of DECnet SNA Gateway to be used. This configuration procedure creates files that define items for the DECnet database on the load host, and the SNA and DECnet databases on the Gateway.
- DECnet SNA Gateway Management utility — The Gateway supports Network Control Program (NCP) commands to manage the Gateway to DECnet components such as lines and circuits.
- Server management — The GAS, RJE, and DHCF servers are managed with SNANCP commands.
- LMF support.

Prerequisite Hardware

Any VAX, MicroVAX, VAXstation, VAXserver, or DECstation system specified in the order code table

Prerequisite Software

VMS operating system to V5.4 or ULTRIX operating system V4.x

DECnet SNA VMS Gateway Management Configuration

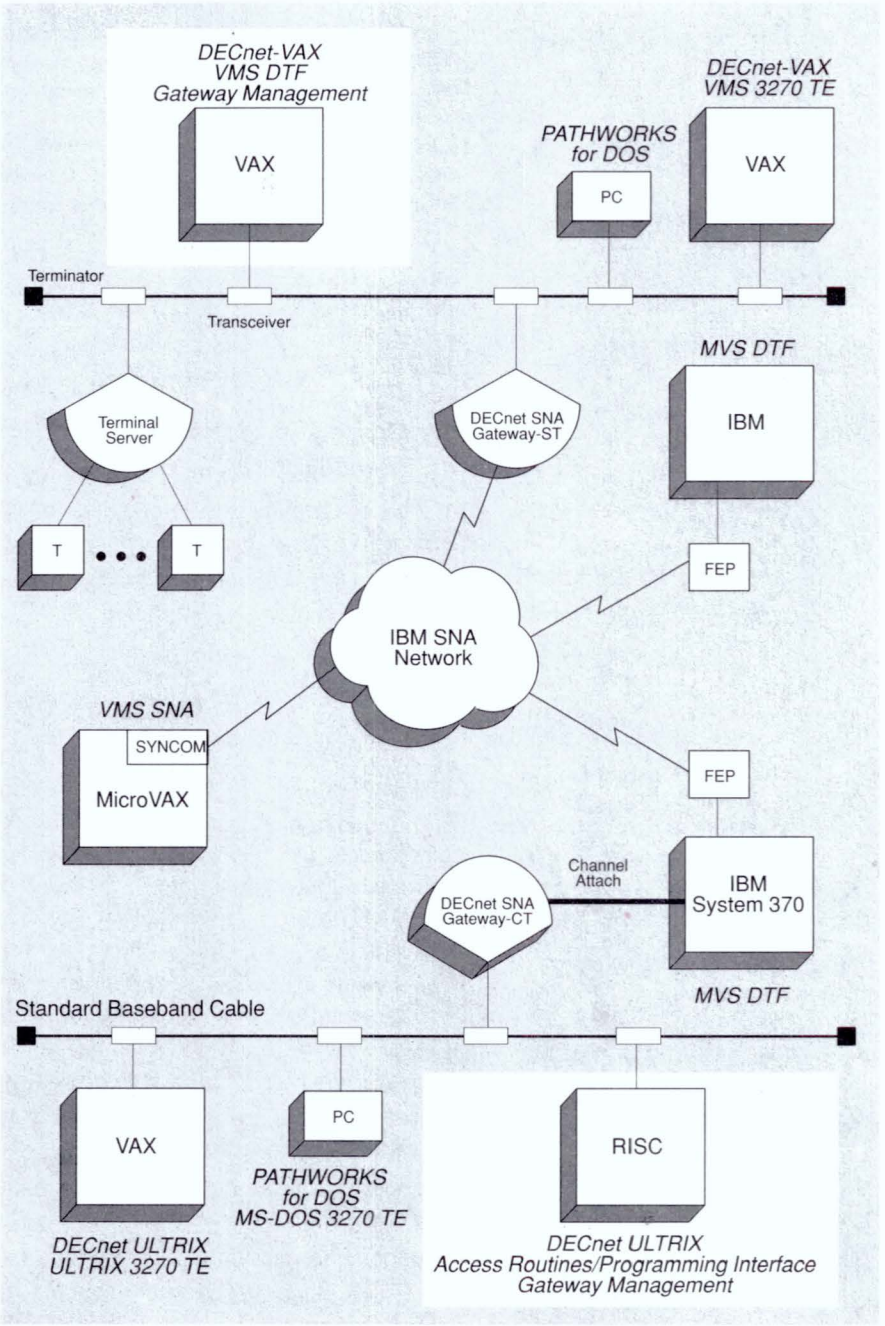

TBG-067-00

VMS SNA

VMS SNA is a software product, layered on the VMS operating system, that provides a system-to-network connection over a synchronous communications line. It is suitable for low-volume applications that run on a single VAX system and require a single, direct link to the SNA environment.

Architecturally, a VAX system running VMS SNA appears to the SNA network as a remote Physical Unit Type 2.0 node, and is attached to the SNA network through a synchronous communications controller to an IBM 37xx Communications Controller.

VMS SNA allows a VMS system to connect to SNA at lower entry cost than the DECnet SNA Gateway products. VMS SNA provides the high-level capabilities of a system-to-network link. When used with the DECnet SNA Access Routines, VMS SNA allows users to perform such functions as:

- Accessing IBM application programs or other system resources.
- Acting as a 3270 display station.
- Transferring files between Digital and IBM environments.
- Exchanging documents and electronic mail messages between the VMS operating system and IBM's DISOSS or PROFS.
- Implementing distributed application programs that run between the VMS and IBM systems.

▲ Refer to Software Product Description 27.01 for more information.

Features

- VMS SNA supports DECnet SNA VMS Access Routines that provide SNA functions such as terminal and printer emulation, bidirectional data transfer, mail exchange, and remote job entry. ▲ Refer to "DECnet SNA Access Routines and Programming Interfaces" in this section for more information.
- SNA Network Control Program (SNANCP) provides a node-management facility to control, monitor, and troubleshoot VMS SNA and IBM SNA environments. SNANCP commands display information about the circuit status, circuit counters, line status, and access names. SNANCP functions are common to both VMS SNA and DECnet SNA Gateway products.
- Network Trace (NETTRACE) is a problem-determination tool that provides frame-level tracing of a circuit to help in debugging application programs, as well as identifying system problems.
- Supports access for up to 64 concurrent sessions, depending upon the type of CPU used.
- Supports one communications link at speeds up to 64 Kb/s.
- Supports connection over X.25-switched virtual circuits using Qualified Logical Link Control (QLLC). VAX Packetnet System Interface (VAX P.S.I.) or VAX P.S.I. Access is required for SNA over X.25 connections.

VMS SNA Configuration

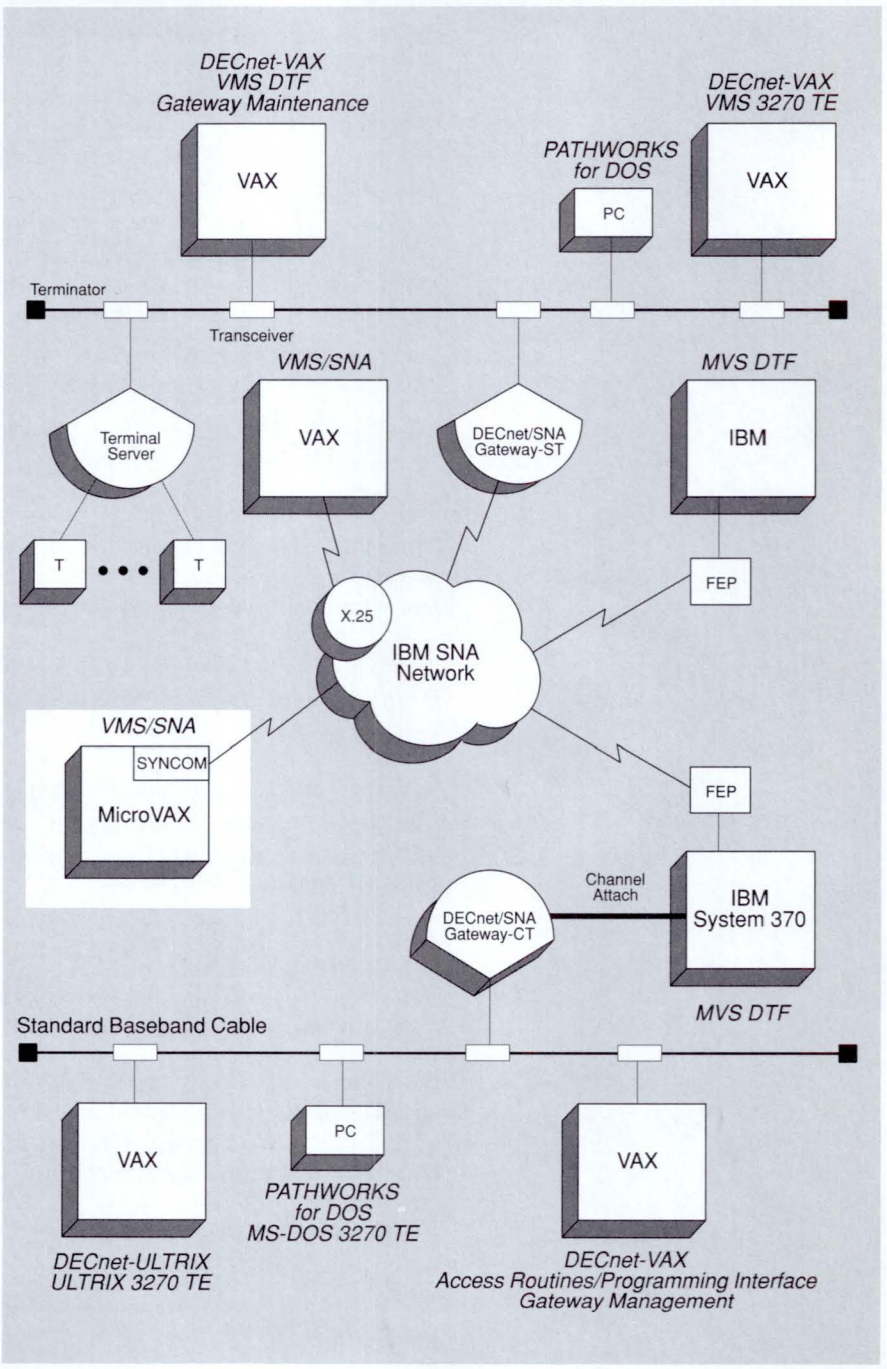

TBG-066-00

Prerequisite Hardware

VMS SNA supports various synchronous communications controllers for supported processors. ▲ Refer to Software Product Description 27.01 for a list of devices and their maximum line speeds.

Prerequisite Software

- VMS operating system V5.0 to V5.1
- At least one of the DECnet SNA Access Routines or Programming Interfaces. (VMS SNA does not support the Distributed Host Command Facility, the MS-DOS 3270 Terminal Emulator or ULTRIX 3270 Terminal Emulator.) ▲ For more information, refer to "DECnet SNA Access Routines and Programming Interfaces" in this section.
- The synchronous communications controller may require a software device driver. ▲ Refer to Software Product Description 27.01 for more information.
- VAX Packetnet System Interface (VAX P.S.I.) V4.2 or VAX P.S.I. Access V4.2 is required for SNA over X.25 support.

Ordering Information

Order the license and at least one copy of the distribution media and documentation kit. ▲ Refer to the following sources for further information on supported processor and services:

- Software Product Description 27.01
- Unique Product Identifier 362

ULTRIX SNA

ULTRIX SNA is a software product, layered on a RISC system, that provides a network-to-network connection over either an SDLC or X.25 communications line. It is suitable for low- to medium-traffic applications that run over a single RISC ULTRIX workstation or a TCP/IP network and require access to one or more IBM SNA hosts.

ULTRIX SNA appears to the SNA network as either a remote Node Type 2.0 or Node Type 2.1 node, and is attached to the SNA network through a synchronous communications controller to an IBM 37xx Communications Controller.

For standalone ULTRIX systems or ULTRIX systems connected via TCP/IP, ULTRIX SNA enables communication to the SNA environment without requiring a DECnet link. When used with the DECnet SNA ULTRIX Access Routines, ULTRIX SNA allows users to perform such functions as

- Accessing IBM applications or system resources
- Acting as a 3270 display station
- Transferring files between Digital and IBM environments
- Implementing distributed application programs that run between ULTRIX and IBM systems

▲ Refer to the following source for more information:

- Software Product Description 37.11.

Features

- Supports Access Routines that provide functions such as terminal and printer emulation, bidirectional data transfer, remote job entry, and program-to-program communication.
- Provides a management facility to control and monitor the ULTRIX SNA and IBM SNA environment, including dynamic definition and activation/deactivation of system resources, links, and sessions.
- Supports access for up to 256 concurrent sessions.
- Supports one communications link at speeds up to 64 Kb/s.
- Supports connection over X.25-switched virtual circuits using Qualified Logical Link Control (QLLC).

Prerequisite Hardware

- For native SDLC or X.25 connectivity, ULTRIX SNA is supported on one of the following RISC ULTRIX systems only:
  - DSH80 for DECsystem 5100
  - DSV11 for DECsystem 5500
  - Native synchronous port for DECstation 5000 Model 120/125/133, DECstation 5000 Model 240, DECsystem 5000 Model 25, and DECsystem 5900

Prerequisite Software

- ULTRIX Operating System Version 4.2
- WAN Device Drivers V2.1
- DEC X.25 Native Mode for ULTRIX (for native QLLC)
- At least one of the DECnet SNA ULTRIX Access Routines or Programming Interfaces. (ULTRIX SNA does not support the DECwindows ULTRIX 3270 Terminal Emulation, DECnet SNA ULTRIX 3270 Terminal Emulation, or DECnet SNA ULTRIX 3270 Data Stream Programming Interface.) ▲ For more information, refer to "DECnet SNA Access Routines and Programming Interfaces" in this section.

Notes:

For X.25 connectivity in gateway mode, an X.25 gateway is required.

A license for DEC X.25gateway Client for ULTRIX is required.

Ordering Information

Order the license and at least one copy of the distribution media and documentation kit. ▲ Refer to the following sources for further information on supported processors and services:

- Software Product Description 37.11
- Unique Product Identifier MAK

VAX Business-Integration Gateway (VBG)

The VAX Business-Integration Gateway (VBG) is a series of hardware and software products that allow a VMS system to be incorporated into an existing IBM SNA controlled business or banking network. The existing network is comprised of an IBM host located within the headquarters or a similar central point that controls a number of peripheral IBM 470x/360x branch controllers located within individual branches.

The VBG software is installed on a VMS for VAX system, located in a branch, between the IBM host and the branch controller. The VAX Business-Integration Gateway, acting as an extension of the SNA configuration, utilizes all existing equipment and communication lines to maintain host/branch-controller data transfer. The VBG does not replace any IBM equipment.

With VAX Business-Integration Gateway software, the functionality and flexibility of the existing network are greatly enhanced. In addition, it can provide access to line mode and FMS-based VMS applications for IBM 470x/360x users.

The VAX Business-Integration Gateway can be incorporated into a DECnet network that allows both Digital and IBM data to be transferred via the same physical network. This enables the introduction of Digital VMS applications into the branches without having to modify or extend network access.

VAX Business-Integration Gateway and DECnet

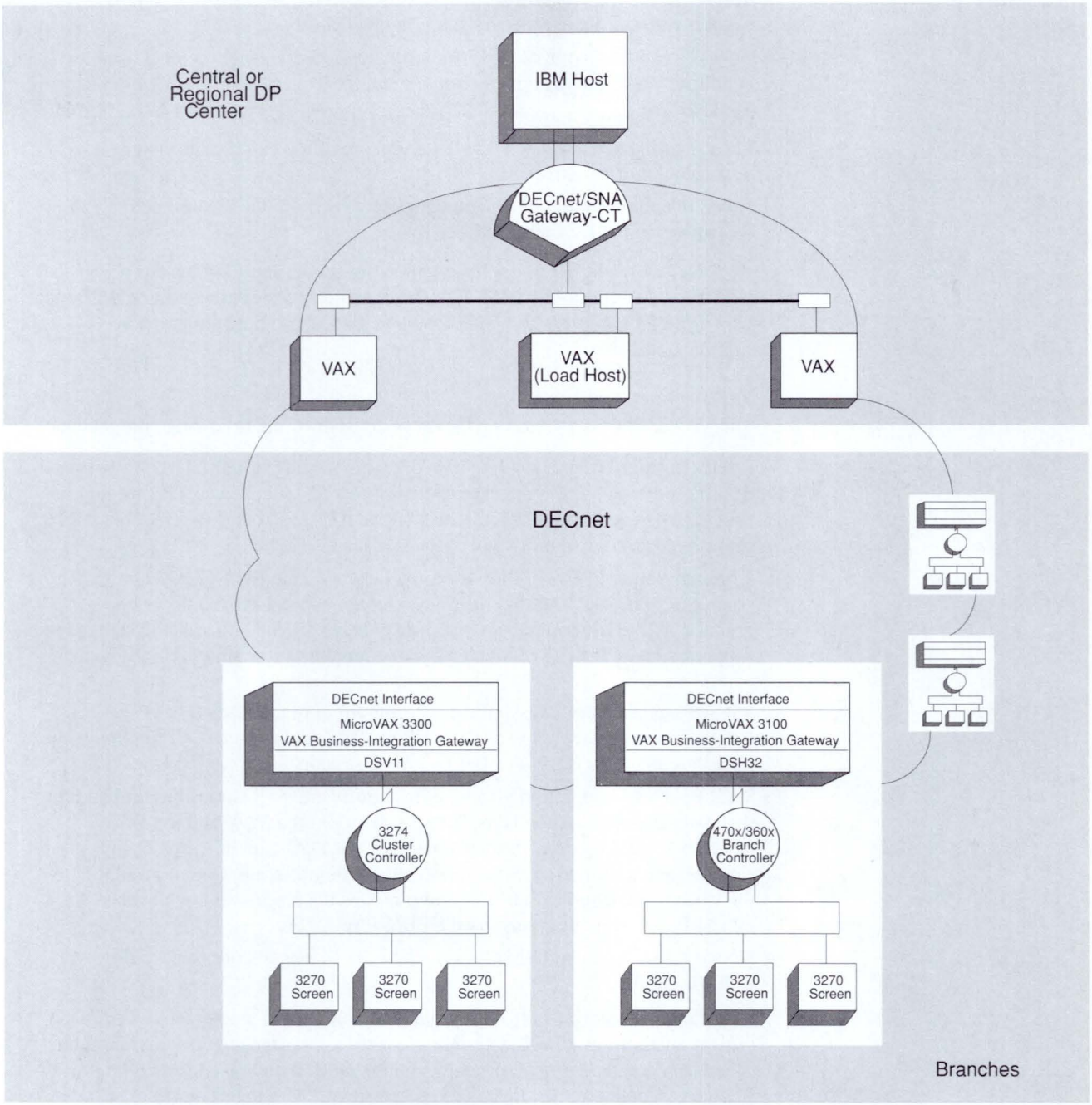

TBG-143–00

Features

- The choice of establishing an IBM session with the IBM host, or a VAX session with the VAX Business-Integration Gateway.
- Access to a wide range of VMS for VAX applications, such as local database handling, word processing, electronic mail, etc.
- Access to Digital's networking capabilities (DECnet).
- Local intelligence at branch level, thereby providing better control and management of resources.
- An architecture to migrate existing applications from the IBM branch controllers to the DECnet VAX network.

Architecturally, the VBG implementation appears to the IBM host as a Physical Unit Type 2.0, and to the IBM 470x/360x branch controller as a limited Physical Unit Type 5. Support is provided for up to 16 SNA logical unit sessions simultaneously.

Software Components

The VAX Business-Integration Gateway consists of the following components:

- Route-Through Server (RTS) — Performs the routing of IBM 470x/360x user data through the VBG System to the IBM host and vice versa. This routing of data is transparent to the applications on the 470x/360x and the IBM host. RTS supports SNA logical units type 0, 1, 2, 3, 4 and 6.2.
- Terminal Server (TS) — Allows terminal users on the IBM 470x/360x branch controller to access VAX applications which must be FMS-based or line oriented. All IBM terminals that appear to be an IBM 3278 Model 2 screen are supported, even if this is achieved by an emulation program within the branch controller.
- VBG Boundary Services Application Programming Interface (BSAPI) — Consists of procedures that a user-written VMS program can call to request the necessary operations for an LU-LU Type 0 session.
- VAX Business-Integration Gateway Base Software — Responsible for handling the lower communication layers of SNA between the VAX and the IBM 470x/360x branch controller. This incorporates Data Link Control, Path Control, and a limited PU5 Services Control Point. In addition, it interfaces to the various management utilities and provides the programming interface (BSAPI) to server programs via the PU5 Services Access.
- Network Management (NM) — The Network Management provides the following utilities:
  - The VBG Network Control Program (VBGNCP) — An interactive command utility that allows a Digital system manager to manage, control, and monitor the VBG components. Manageable components include physical communication lines, data circuits, PUs, LUs, servers, and SNA logon modes.
  - The VBG Event Logger (VBGEVL) — A management tool that allows users to log all major events that occur within the VBG and the link to the IBM 470x/360x branch controller.

- The NETTRACE Command Utility — NETTRACE allows system managers to monitor, capture, and analyze the information transmitted on the line between the VAX system and the IBM 470x/360x branch controller. This allows troubleshooting of problems associated with the VBG system as well as debugging application programs. In addition, privileged users can trace the SNA protocol exchange at circuit-, PU-, and LU-level.

Prerequisite Hardware

- General requirements
  - Any synchronous device supported by VMS SNA
  - IBM 360x or 4701/2 or 3274 or Olivetti line 1 cluster controller
- Route-Through Server requirements
  - DECnet SNA Gateway-ST or DECnet SNA-CT hardware configuration
  - VMS SNA software installed on the same VAX system as the VBG software
- Terminal Server requirements
  - A 470x/360x hardware configuration that is supported by the 3278 emulator (see Prerequisite Software)

Prerequisite Software

- General requirements
  - VMS operating system V5.3
  - Device driver for synchronous interfaces
- Route-Through Server requirements
  - DECnet SNA Gateway V2.x or VMS SNA V2.x software configuration
  - Installed DECnet license key
- Terminal Server requirements
  - 3278 emulator (e.g., RM-Passthru) on the IBM 470x/360x branch controller for VMS access

Ordering Information

VAX Business-Integration Gateway is available as a Packaged Application Software Solution (PASS) and can be ordered through the European ASSETS Program as a single-use license. For further information, contact your local sales representative.

DECnet SNA Access Routines and Programming Interfaces allow users to perform specific functions on IBM host systems connected to the SNA network. Access Routine software packages are required for either the DECnet SNA Gateway products or VMS SNA software.

The following products, which are ordered separately, are available:

- Message Router/S Gateway (for IBM SNADS)
- Message Router/P Gateway (for IBM PROFS)
- DECnet SNA VMS 3270 Terminal Emulator (VMS 3270 TE)
- DECnet SNA ULTRIX 3270 Terminal Emulator (ULTRIX 3270 TE)
- DECnet SNA MS-DOS 3270 Terminal Emulator (MS-DOS 3270 TE)
- DECwindows DECnet SNA 3270 Terminal Emulator for VMS
- DECwindows DECnet SNA 3270 Terminal Emulator for ULTRIX
- DECnet SNA ULTRIX 3270 Terminal/Print Services
- DECnet SNA VMS 3270 Data Stream Programming Interface (VMS 3270 DSPD)
- DECnet SNA ULTRIX 3270 Data Stream Programming Interface (ULTRIX 3270 DSPI)
- DECnet SNA ULTRIX High Level Language Application Programming Interface (HLLAPI)
- DECnet SNA VMS Application Programming Interface (API)
- DECnet SNA VMS Remote Job Entry (VMS RJE)
- DECnet SNA ULTRIX Remote Job Entry (ULTRIX RJE)
- DECnet SNA Data Transfer Facility (DTF)
- Distributed Host Command Facility (DHCF)
- Printer Emulator (PrE)
- DECnet SNA Advanced Program-to-Program Communication/LU6.2 Programming Interface (VMS APPC/LU6.2)
- DECnet SNA ULTRIX Advanced Program-to-Program Communication/LU6.2 Programming Interface (ULTRIX APPC/LU6.2)

The following table lists the IBM operating systems supported by each of the access routines.

IBM Software Supported by Access Routines

DECnet SNA Access Routine	IBM Software Supported		
	MVS	VM/SP	VSE/SP
DECnet SNA VMS 3270 Terminal Emulator V1.5	CICS, ISPF, Netview, PS/370, TSO	CMS, PROFS, Netview	CICS, ISPF, NCCF, PS/370
DECnet SNA ULTRIX 3270 Terminal Emulator, V1.1	CICS, ISPF, Netview, PS/370, TSO	CMS, PROFS, Netview	CICS, ISPF, NCCF, PS/370
DECwindows DECnet SNA 3270 Terminal Emulator for VMS	CICS, ISPF, Netview, PS/370, TSO	CMS, PROFS, Netview	CICS, ISPF, NCCF, PS/370
DECwindows DECnet SNA 3270 Terminal Emulator for ULTRIX	CICS, ISPF, Netview, PS/370, TSO	CMS, PROFS, Netview	CICS, ISPF, NCCF, PS/370
DECnet SNA 3270 Terminal Emulator for ULTRIX	CICS, ISPF, Netview, PS/370, TSO	CMS, PROFS, Netview	CICS, ISPF, NCCF, PS/370
DECnet SNA MS-DOS 3270 Terminal Emulator V2.0	CICS, ISPF, Netview, PS/370, TSO	CMS, PROFS, Netview	CICS, ISPF, NCCF, PS/370
DECnet SNA ULTRIX 3270 Terminal/Print Services V1.0	CICS, ISPF, Netview, PS/370, TSO, DSPRINT CICS JES 328X	CMS, PROFS, Netview, RSCS	CICS, ISPF, NCCF, PS/370, CICS, VSE/Power
DECnet SNA VMS RJE V1.4	JES2, JES3	N/A	VSE/Power
DECnet SNA ULTRIX RJE V1.0	JES2, JES3	RSCS	VSE/Power
DECnet SNA VMS API V2.3	CICS, VTAM, IMS, TSO	VTAM, CMS, RSCS	CICS, VTAM
DECnet SNA VMS 3270 Data Stream Programming Interface V1.4	CICS, IMS, TSO, VTAM	CMS	CICS, VTAM
DECnet SNA ULTRIX 3270 Data Stream Programming Interface V1.0	CICS, IMS, TSO, VTAM	CMS	CICS, VTAM
DECnet SNA ULTRIX HLLAPI V1.0	CICS, IMS, TSO, VTAM	CMS	CICS, VTAM

IBM Software Supported by Access Routines (Continued)

DECnet SNA Access Routine	IBM Software Supported		
	MVS	VM/SP	VSE/SP
DECnet SNA VMS APPC/LU6.2 Programming Interface V2.1	CICS	N/A	CICS
DECnet SNA ULTRIX APPC/ LU6.2 Programming Interface V1.0	CICS	N/A	CICS
DECnet SNA VMS PrE V1.2	DSPRINT, CICS, JES 328X	RSCS	CICS, VSE/Power
DECnet SNA VMS DHCF V1.2	HCF	N/A	N/S
DECnet SNA DTF V3.0	MVS/DTF	VM/DTF	N/A
VAX Message Router/S Gateway V1.0	DISOSS	N/A	N/S
VAX Message Router/P Gateway V1.0	N/A	PROFS, CMS Notes	N/A

N/A means not applicable.

N/S means the product has not been certified and is not supported.

Message Router/S Gateway (for IBM SNADS)

Message Router/S Gateway is a layered VMS application that allows transparent exchange of messages between Digital and IBM Office Networks. ▲ For more information, refer to the MAILbus product description in Section 6.

Message Router/P Gateway (for IBM PROFS)

Message Router/P Gateway is a layered VMS application that allows transparent exchange of messages among Digital, IBM PROFS, and CMS systems. ▲ For more information, refer to the MAILbus product description in Section 6.

DECnet SNA VMS 3270 Terminal Emulator (VMS 3270 TE)

The DECnet SNA VMS 3270 Terminal Emulator (VMS 3270 TE) is software layered on DECnet VAX that allows VT users (or users of other Digital terminals, workstations, or personal computers in VT emulation mode) on suitably configured VAX, MicroVAX, or VAXstation systems to interactively access IBM mainframe-based applications. The applications for use by the VMS 3270 TE are those originally developed for IBM 3270 display stations in a Systems Network Architecture (SNA) networking environment.

The VMS 3270 Terminal Emulator gains access to the SNA environment via a DECnet SNA Gateway product or VMS SNA software.

Features

- IBM 3x78 Models 2, 3, 4, or 5 Terminal Emulation.
- Support for multiple IBM operating system environments (MVS, VM, VSE/SP).
- Support for SSCP-LU sessions — Supports USS screen (also called Message 10) and by use of the SYS REQ key allows users to switch easily between SSCP-LU and LU-LU sessions.
- Support for SPAWN/ATTACH commands — Allows users to create subprocesses and easily switch between VMS processes using SPAWN/ATTACH commands.
- Support for RECORD/PLAYBACK — Allows users to save frequently used key sequences and associate them with particular program function (PF) keys. The key sequences saved (recorded) can then be executed by pressing the desired PF key. Up to 127 keystrokes can be saved on each PF key.
- Support for Numeric Lock Override — Allows users to enter nonnumeric characters in numeric fields. The numeric lock override feature is enabled/disabled by the NUM OVR key.

VMS 3270 Terminal Emulator Configuration

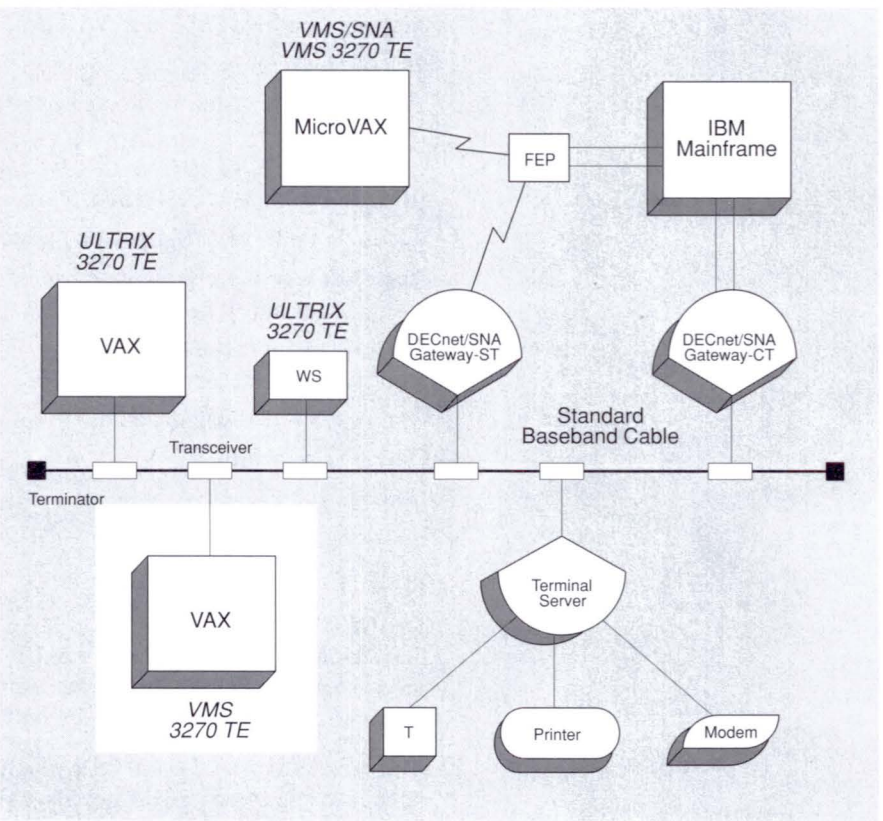

TBG-068-00

Prerequisite Hardware

The VMS 3270 TE is supported on any valid VAX, MicroVAX, or VAXstation running VMS and DECnet VAX. ▲ For more specific communications configuration information, refer to Software Product Description 26.84.

▲ Refer to the appropriate DECnet SNA Gateway product in this section for more information.

Prerequisite Software

- VMS operating system V5.0 to V5.1
- DECnet VAX V5.0
- DECnet SNA Gateway-CT or DECnet SNA Gateway-ST, or VMS SNA

▲ Refer to the following sources for further information on supported processors and services:

- Software Product Description 26.84.00
- Unique Product Identifier 454

DECnet SNA ULTRIX 3270 Terminal Emulator (ULTRIX 3270 TE)

The DECnet SNA ULTRIX 3270 Terminal Emulator (ULTRIX 3270 TE) is software layered on DECnet ULTRIX that allows VT users (or users of other Digital terminals, workstations, or personal computers in VT emulation mode) to interactively access IBM mainframe-based applications. ULTRIX 3270 TE is supported on both RISC and VAX processors.

The ULTRIX 3270 Terminal Emulator gains access to the SNA environment via a DECnet SNA Gateway product only.

Features

- IBM 3x78 Model 2, 3180 (24 × 80 mode) Terminal Emulation.
- Access to multiple IBM operating system environments (MVS, VM, VSE/SP).
- Access to IBM mainframe-based applications (via the DECnet SNA Gateway) designed for interaction with a screen size of 1920 (24 × 80) characters.
- RECORD/PLAYBACK function for associating frequently used key sequences with particular PF (Program Function) keys.
- Online keyboard customization.
- Online help facility.
- Numeric Lock Override.
- Local/logical print functions.

Prerequisite Hardware

The ULTRIX 3270 TE is supported on any valid VAX, MicroVAX, or VAXstation running ULTRIX and DECnet ULTRIX. (The order code lists the supported processors). ▲ For more specific communications configuration information, refer to Software Product Description 26.40.00.

IBM Access is via a DECnet SNA Gateway only. ▲ For more information, refer to the appropriate DECnet SNA Gateway product description in this section.

Prerequisite Software

- ULTRIX operating system V2.2 or later, or ULTRIX Worksystem Software V1.1 (for VAXstation 3200/3500 systems) or later
- DECnet ULTRIX V2.2 or later

▲ Refer to the following sources for further information on supported processors and services:

- Software Product Description 29.88.00
- Unique Product Identifier VCW

ULTRIX 3270 Terminal Emulator Configuration

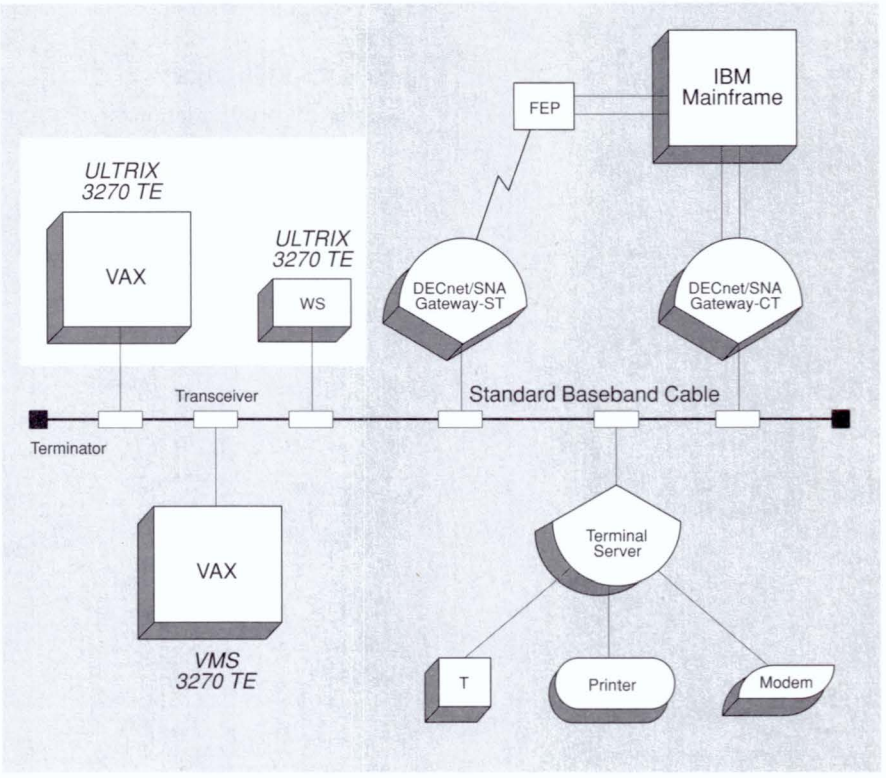

TBG-069-00

DECnet SNA MS-DOS 3270 Terminal Emulator (MS-DOS 3270 TE)

The DECnet SNA MS-DOS 3270 Terminal Emulator (MS-DOS 3270 TE) is software layered on DECnet DOS (a component of PATHWORKS for DOS software) that allows an MS-DOS based personal computer (PC), connected as an end node in a DECnet environment to interactively access IBM mainframe-based applications. The PC connection to the DECnet environment can be via either a serial port driver with asynchronous DDCMP, or an 802.3/Ethernet communications controller.

The MS-DOS 3270 TE is available for use with the DECnet SNA Gateway products only.

Features

- IBM 3192-G, 3279-S3G, 3179-G, 3180, 3x78 Terminal Emulation.
- Extended color (eight colors).
- Mouse support (Digital, Logitech, MicroSoft).

- APA and Program Symbol graphics support.
- Access to IBM mainframe-based applications (via the DECnet SNA Gateway), designed for interaction with a screen size of up to 2560 (32 × 80) characters.
- RECORD/PLAYBACK function for associating frequently used key sequences with particular program function (PF) keys.
- Online keyboard customization.
- SPAWN capability for accessing the DOS command environment from the TE session.
- Numeric Lock Override.
- Local/logical print functions (color printing available if using SIXEL protocols).

MS-DOS 3270 Terminal Emulator Configuration

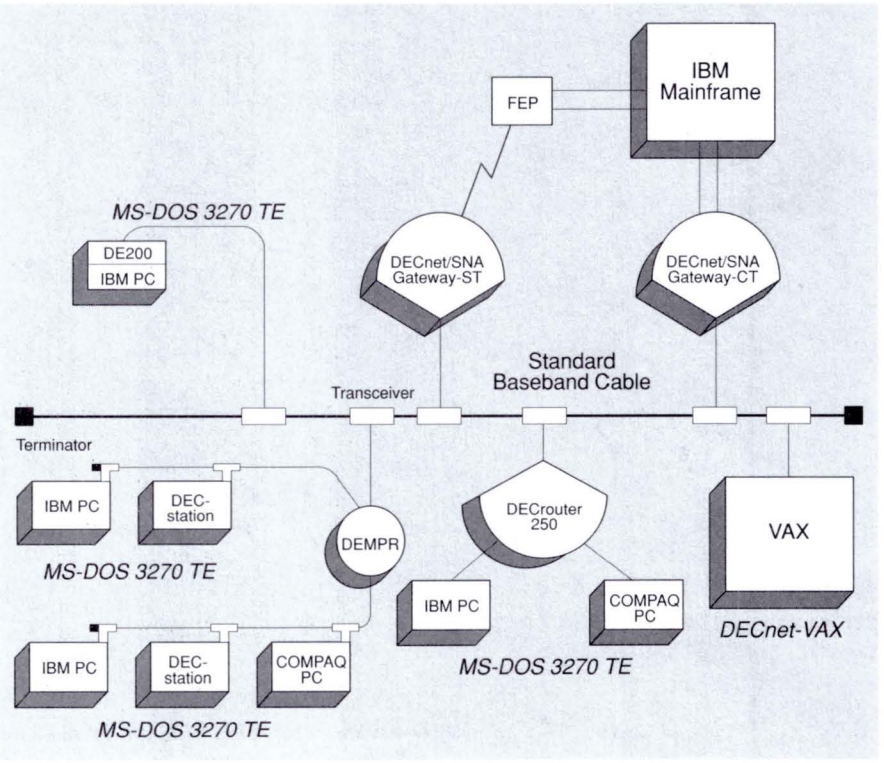

TBG-070-00

Prerequisite Hardware

The following systems are supported:

- DECstation 316
- DECstation 320
- IBM 5150 Personal Computer
- IBM 5160 Personal Computer XT
- IBM 5162 Personal Computer XT Model 286
- IBM 5170 Personal Computer AT
- IBM 8530 Personal System/2 Model 30

- IBM 8550 Personal System/2 Model 50
- IBM 8555 Personal System/2 Model 50
- IBM 8560 Personal System/2 Model 60
- IBM 8570 Personal System/2 Model 70
- IBM 8580 Personal System/2 Model 80
- COMPAQ DESKPRO 286 Personal Computer Model 40
- COMPAQ DESKPRO Model 2

Standard keyboards supplied with the PCs above are supported. The Digital LK250 is also supported on the IBM PC, IBM PC/XT, IBM PC/AT, and DECstation-family systems.

The following video adapters are supported:

- MDA (IBM Monochrome Display Adapter)
- CGA (IBM Color Graphics Adapter)
- EGA (IBM Enhanced Graphics Adapter — Up to 256 KB of video memory are required depending upon graphics used)
- MCGA (IBM PS/2 Model 30 video hardware)
- VGA (IBM PS/2 Model 50, 60, 80 video hardware) IBM Access requires a DECnet SNA Gateway. ▲ Refer to Software Product Description 25.C6.00 or 29.76.00 for DECnet SNA Gateway configuration details.

Prerequisite Software

Operating system — one of the following depending on PC model: IBM PC disk operating system

- COMPAQ MS-DOS
- DECstation MS-DOS

Digital layered products — (DECnet DOS is included in this software product) or DECnet PATHWORKS for DOS. ▲ Refer to the following sources for further information on supported processors and services:

- Software Product Description 30.63.00
- Unique Product Identifier VFA

DECwindows DECnet SNA 3270 Terminal Emulator for VMS (DW VMS 3270 TE)

DECwindows DECnet SNA 3270 Terminal Emulator for VMS (DW VMS 3270 TE) is a layered software product that allows users of Digital-supported workstations on suitably configured VMS systems within a DECnet network to interactively access IBM mainframe-based applications.

While the emulation utility is operating, the display window is formatted in a fashion similar to an IBM 3270 display station with the option of 3270, 3279-S3G, or 3192-G terminal types.

The DECwindows DECnet SNA 3270 Terminal Emulator gains access to the SNA environment via DECnet SNA Gateway products or VMS SNA software.

Features

- Graphics — 3279-S3G graphics (programmed symbols) and 3192-G graphics (APA).
- Extended color (blue, red, pink, green, turquoise, yellow, white, black).
- Extended highlighting (reverse video, underscore).
- DECwindows-style interface.
- Online documentation (DECwindows bookreader).
- Screen trimming.
- Mouse definition.
- Pop-up menu support.
- Resizing window back to original.
- Color-coded status indicators.
- Binary key definition file.

Prerequisite Hardware

The DW VMS 3270 TE is supported on any valid VAX, MicroVAX or VAXstation running VMS and DECnet VAX. For more specific communications configuration information, refer to Software Product Description 31.58.

Prerequisite Software

- VMS operating system V5.1 or later and necessary components of VMS DECwindows
- DECnet VAX V5.1 or later
- DECnet SNA Gateway-CT, DECnet SNA Gateway-ST, or VMS SNA

Ordering Information

Use the software order code template in this section when building an order code number from the software Unique Product Identifier (UPI). Refer to the Software Product Description (SPD), or consult your local sales representative to determine whether the software application ordered is supported by the processor for which it is intended.

▲ Refer to the following sources for further information on supported processors and services:

- Software Product Description 31.58.00
- Unique Product Identifier VXB

DECwindows 3270 Terminal Emulator for VMS Configuration

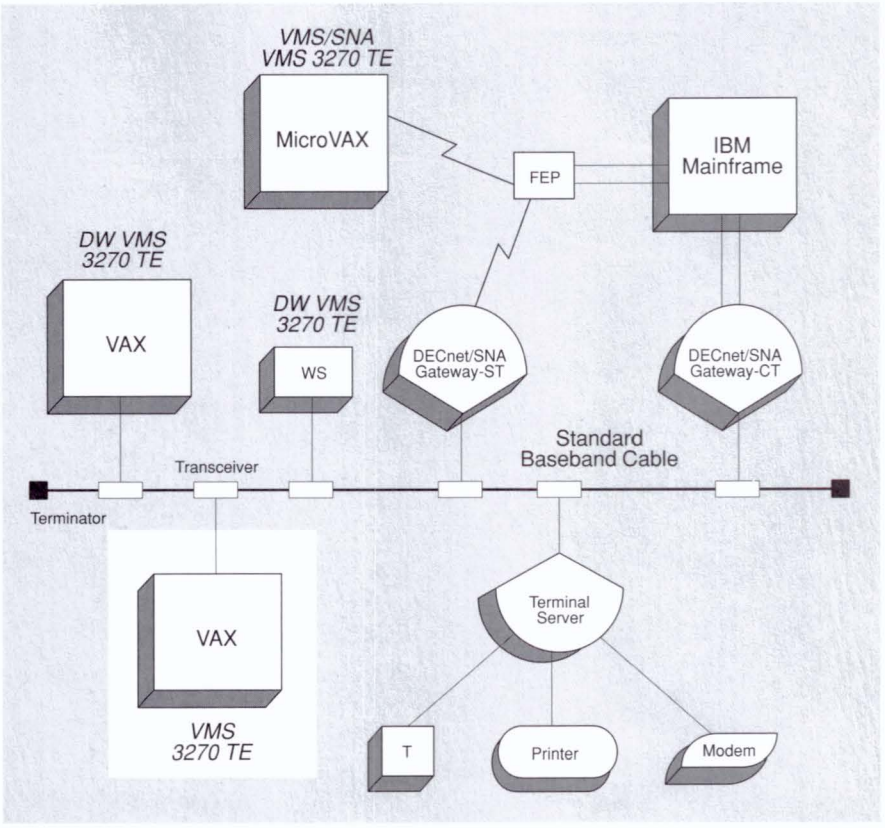

TBG-071-00

DECwindows DECnet SNA 3270 Terminal Emulator for ULTRIX (DW ULTRIX 3270 TE)

DECwindows DECnet SNA 3270 Terminal Emulator for ULTRIX (DW ULTRIX 3270 TE) is a layered software product that allows users of Digital supported workstations on suitably configured ULTRIX systems within a DECnet network, to interactively access IBM mainframe-based applications. Access from the Digital DECnet environment to the IBM SNA environment is gained via any of the DECnet SNA Gateway transport products.

While the emulation utility is operating, the display window is formatted in a fashion similar to an IBM 3270 display station with the option of 3270, 3279-S3G, or 3192-G terminal types.

Note: The DECwindows DECnet SNA 3270 Terminal Emulator for ULTRIX gains access to the SNA environment via DECnet SNA Gateway products only.

Features

- Graphics — 3279-S3G graphics (programmed symbols) and 3192-G graphics (APA).
- Extended color (blue, red, pink, green, turquoise, yellow, white, black).
- Extended highlighting (reverse video, underscore).
- DECwindows-style interface.
- Screen trimming.
- Mouse definition.
- Pop-up menu support.
- Resizing window back to original.
- Color-coded status indicators.

Prerequisite Hardware

The DW ULTRIX 3270 TE is supported on any valid RISC, VAX, MicroVAX, or VAXstation configuration. For more specific communications configuration information, refer to Software Product Description 31.57.00.

Prerequisite Software

- ULTRIX Worksystem Software V2.1 (DECwindows interface required)
- DECnet ULTRIX V3.0
- DECnet SNA Gateway-CT or DECnet SNA Gateway-ST

Ordering Information

▲ Use the software order code template in the "Interoperatbility: Communications Software" section when building an order code from the software's Unique Product Identifier (UPI). Refer to the Software Product Description (SPD) or consult your local sales representative to determine whether the software application ordered is supported by the processor for which it is intended.

▲ Refer to the following sources for further information on supported processors and services:

- Software Product Description 31.57.00
- Unique Product Identifier VXA

DECwindows 3270 Terminal Emulator for ULTRIX Configuration

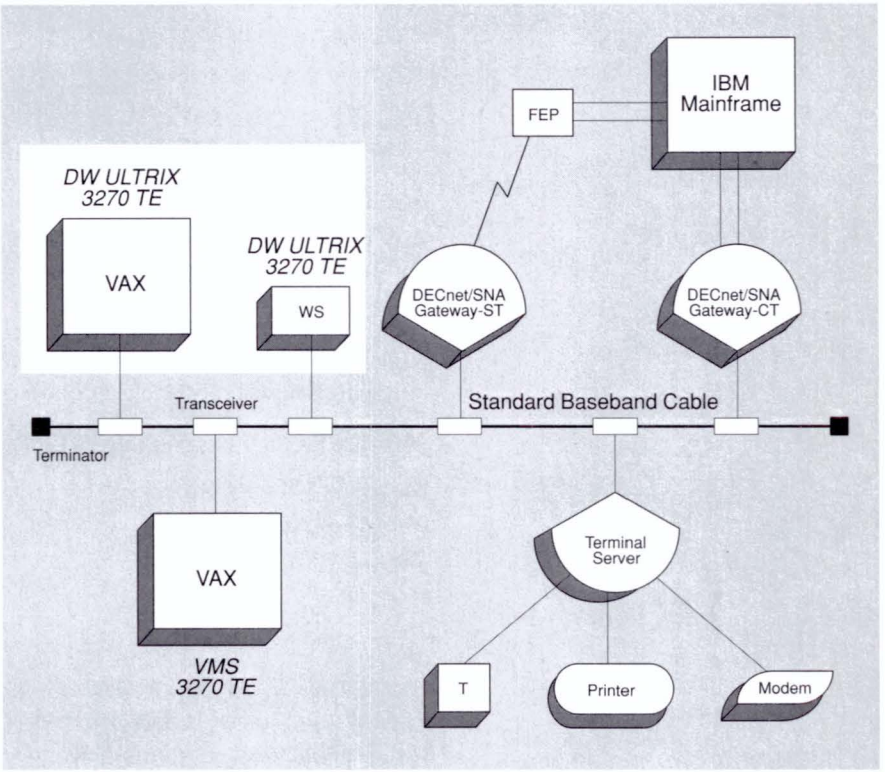

TBG-072-00

DECnet SNA ULTRIX 3270 Terminal/Print Services

DECnet SNA ULTRIX 3270 Terminal/Print Services is a layered software product that allows users of Digital supported workstations, on suitably configured ULTRIX systems within a DECnet or TCP/IP network, to interactively access IBM mainframe-based applications.

Access from the Digital DECnet environment to the IBM SNA environment is gained via any of the DECnet SNA Gateway transport products. Access from the Digital TCP/IP environment to the IBM SNA environment is via the ULTRIX SNA product.

Features

- Provides 3278/3279 terminal emulation.
- Provides 3287 printer emulation.
- Supports IND$ file transfer.
- Supports hot key.

Prerequisite Hardware

DECnet SNA ULTRIX 3270 Terminal/Print Services is supported on any valid RISC or VAX ULTRIX configuration. ▲ For more information, refer to Software Product Description 37.12.

Prerequisite Software

- ULTRIX Operating System Software Version 4.2
- One of the following products:
  - DECnet SNA Gateway-CT
  - DECnet SNA Gateway-ST
  - ULTRIX SNA

Ordering Information

Use the software order code template in the "Interoperability: Communications Software" section when building an order code from the software Unique Product Identifier (UPI). Refer to the Software Product Description (SPD), or consult your local sales representative to determine whether the software application ordered is supported by the processor for which it is intended. ▲ Refer to the following sources for further information on supported processors and services:

- Software Product Description 37.12
- Unique Product Identifiers:
  - MAM (RISC)
  - MAL (VAX)

DECnet SNA VMS Remote Job Entry (RJE)

The DECnet SNA VMS Remote Job Entry (VMS RJE) access routine allows suitably configured VAX or MicroVAX systems to function as SNA VMS RJE workstations that can submit batch jobs to an IBM host and receive job output. The VMS RJE access routine must reside on each VAX or MicroVAX system supporting VMS RJE transmission. Note that access routines are not required for DECnet nodes that transmit files to a DECnet system for subsequent VMS RJE processing, nor are they required for any routing nodes between the requesting VAX or MicroVAX system and the DECnet SNA Gateway. The VMS RJE access routine is available for use with both VMS SNA and the DECnet SNA Gateway products.

Prerequisite Software

- VMS operating system V5.0 to V5.1
- DECnet VAX V5.0 to V5.1
- DECnet SNA Gateway-CT, DECnet SNA Gateway-ST, or VMS SNA (DECnet VAX not required when using VMS SNA)

Ordering Information

▲ Refer to the following sources for further information:

- Software Product Description 26.85.00
- Unique Product Identifier 453

DECnet SNA ULTRIX Remote Job Entry (ULTRIX RJE)

The DECnet SNA ULTRIX Remote Job Entry (ULTRIX RJE) access routines allow suitably configured VAX ULTRIX or RISC ULTRIX systems to function as SNA/RJE workstations that can submit batch jobs to an IBM host and receive job output. The ULTRIX RJE access routine can be used with any of the DECnet SNA transport products, and the ULTRIX SNA product. When used with ULTRIX SNA, ULTRIX RJE must reside on the same system; it cannot be run remotely.

Features

- Enables submission of batch jobs to an IBM mainframe for processing with receipt of job output.
- Supports file transfer between ULTRIX systems in a DECnet or TCP/IP environment and IBM mainframes.
- Enables periodic updates to central IBM databases automatically.

Prerequisite Hardware

A valid RISC ULTRIX or VAX ULTRIX configuration.

▲ For more specific communications configuration information, refer to Software Product Description 37.13.

Prerequisite Software

- ULTRIX Operating System V4.2
- One of the following products:
  - DECnet SNA Gateway-CT
  - DECnet SNA Gateway-ST
  - ULTRIX SNA

Ordering Information

Refer to the following sources for further information:

- Software Product Description 37.13
- Unique Product Identifiers:
  - MAN (RISC)
  - MAP (VAX)

DECnet SNA Data Transfer Facility (DTF)

The DECnet SNA Data Transfer Facility (DTF) is a software product that provides bidirectional data transfer capabilities, initiated by either environment, between an IBM MVS or VM system in a Systems Network Architecture (SNA) environment and one or more Digital nodes in a DECnet network. Digital nodes include VMS systems running DECnet VAX; ULTRIX systems running DECnet ULTRIX; RSX-11M/RSX-11M-PLUS systems running DECnet-MicroRSX; MS-DOS systems running PATHWORKS for DOS; and OS/2 systems running PATHWORKS for OS/2. Access between the cooperating Digital and IBM environments is via a DECnet SNA Gateway or VMS SNA software.

The DTF software is comprised of the following components:

- DECnet SNA DTF Server software that runs on a DECnet VAX system to communicate between the DECnet nodes and the IBM system running DTF for IBM software.
- DECnet SNA DTF for IBM MVS software that runs on the IBM MVS system. It includes a VTAM application program to control the communications with the VMS DTF Server nodes, a TSO command processor, and an ISPF dialog to initiate transfers from the IBM system.
- DECnet SNA DTF for IBM VM software that runs on the IBM VM system. It includes a VTAM application program to control the communications with the VMS DTF Server nodes, a CMS application for purposes of transferring files, a TS0 command processor, command line interface, and an ISPF dialog to initiate transfers from the IBM system.
- Optional DECnet SNA VMS DTF Utilities software that runs on any DECnet VAX node that is not a DTF server that needs to initiate recoverable file transfers.

Features

- Allows record-level access from VMS systems to MVS and VM data sets via DATATRIEVE, RMS applications, or DCL commands.
- Provides create, read, and write facilities for IBM VSAM and other data sets.
- Uses the VMS DTF Server software via DECnet for all VMS, MS-DOS, OS/2, RSX, and ULTRIX systems.
- Allows MS-DOS, OS/2, ULTRIX, RSX, and VMS systems to initiate nonrecoverable, bidirectional file transfers. Optional DTF Utilities software provides recovery and management capabilities for other networked VMS systems.
- Provides recoverable file transfer for other file types between the IBM MVS or VM system and a VMS system.
- Allows customers to maintain control over their corporate data.
- Provides password security through a proxy database on the VMS DTF Server node for both Digital and IBM users.
- Supports standard user interfaces in Digital and IBM environments.
- Allows VMS and ULTRIX users to target IBM disks and tapes to back up and restore operations.
- Supports remote job submission from all DECnet clients to the IBM system.
- Allows users to provide post-processing files to be executed after a file transfer is complete.
- Supports SMS-managed data sets.
- Allows users to select the system that performs text translation enabling them to optimize performance.

DTF Configuration

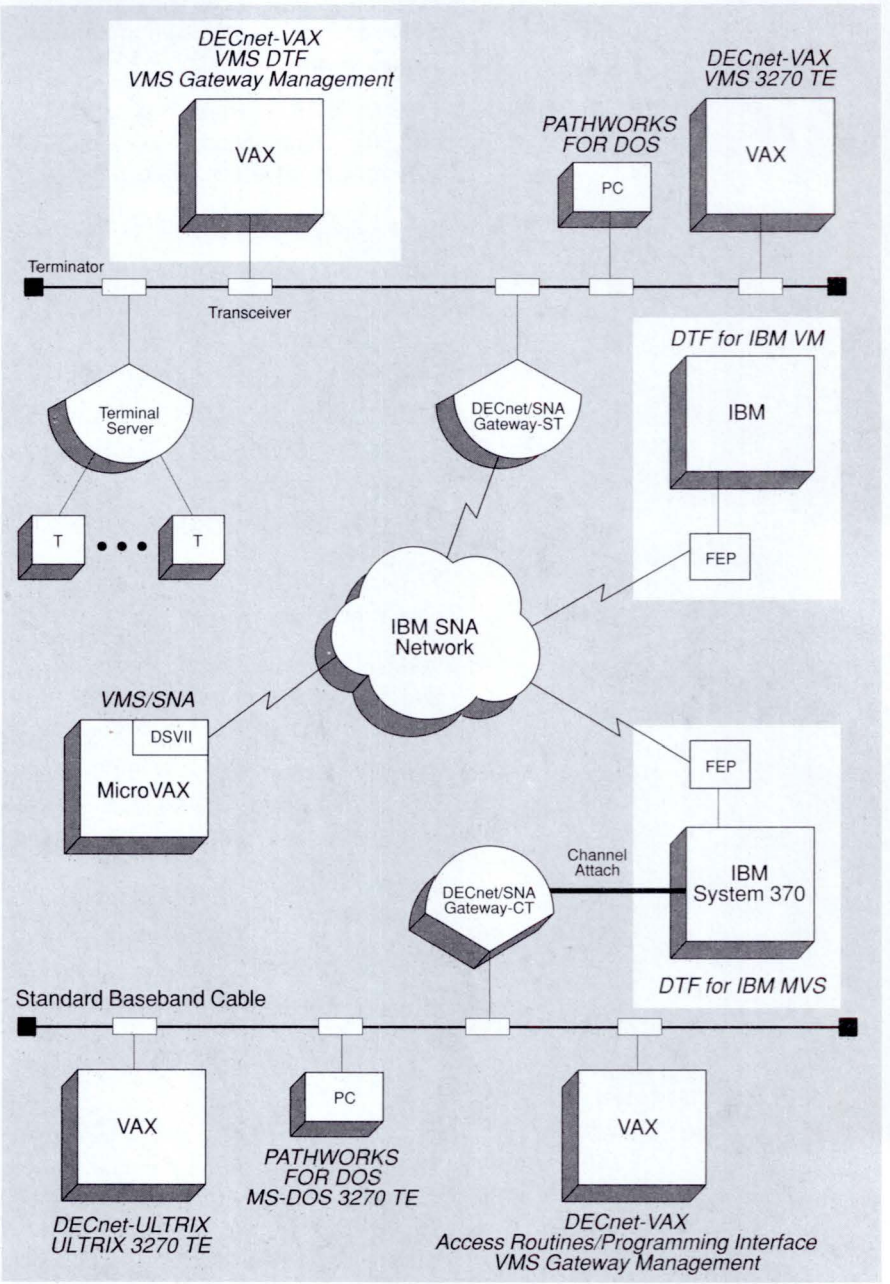

TBG-073-00

Prerequisite Hardware

A suitably configured VAX system that will act as the DTF server. ▲ Refer to Software Product Description 27.85 for Server and Utilities block-space requirements.

DTF for IBM is installed on an IBM System 370-class machine (including 43xx and 30xx) running either MVS or VM. ▲ Refer to Software Product Description 27.85 for more information.

Prerequisite Software

- For VMS DTF Server and Utilities:
  - VMS operating system V5.2 to V5.4
  - DECnet VAX V5.2 to V5.4
- For ULTRIX, MS-DOS, OS/2 and RSX clients, one of the following products:
  - ULTRIX V4.1 and DECnet ULTRIX V4.0
  - PATHWORKS for DOS V4.0
  - PATHWORKS for OS/2 V4.0
  - DECnet RSX V4.0 (M-PLUS), V4.2 (M)

Ordering Information

Order the following products:

- A license for the VAX processor that will act as the server and a distribution and documentation kit.
- A license for the IBM MVS or VM system and a software distribution kit delivered on 9-track 6,250 bpi magtape.
- As an option, a license for each VAX system that requires the VMS DTF Utilities and at least one distribution and documentation kit.

▲ Refer to the following sources for further information on supported processors and services:

- Software Product Description 27.85.00
- Unique Product Identifiers VEB (Server), VEK (Utilities), 1GQ (MVS software), GUY (VM software)

DECnet SNA Integrated Information Access Packages

To make it easier for customers to implement high-speed file transfer in their Digital to IBM environments, a new DECnet SNA Integrated Information Access Package is available to support customers with VM systems in their networks. This package joins the original DECnet SNA Integrated Information Access Package for MVS users.

The DECnet SNA Integrated Information Access Packages consist of a DECnet SNA Gateway-CT and DTF. The DECnet SNA Gateway-CT provides superior throughput capabilities for file transfer and task-to-task applications between DECnet and SNA environments.

Customers can solve their information access problems by ordering a single package rather than individual components. Additionally, when purchased as part of the Integrated Package, the DTF Server is tier-neutral; customers can run it on any VMS for VAX system they choose. There are two packages: one for the VM environment, and one for the MVS environment. The SNA Integrated Information Access Package consists of the following components:

- DECnet SNA Data Transfer Facility (DTF) V3.0 consisting of the DECnet SNA DTF Server software, and either the DECnet SNA DTF software for IBM VM or the DECnet SNA DTF software for IBM MVS.
- DECnet SNA Gateway for Channel Transport V2.0 hardware and software including DECnet SNA Gateway Management.

Ordering Information

DECnet SNA Integrated Information Access Packages Country Order Codes

Option	Order Code
VM Packaged System for the United States, Canada, Japan	
DECnet SNA VMS Data Transfer Facility Server	DESNB-VM
DECnet SNA Data Transfer Facility for IBM VM	
DEC ChannelServer II (120 V)	
DECnet SNA Gateway-CT V2.0 software license	
DECnet SNA VMS Gateway Management V2.1 software license	
U.S., Canada, Japan power cable	
VM Packaged System for Europe	
DECnet SNA VMS Data Transfer Facility Server	DESNB-VY
DECnet SNA Data Transfer Facility for IBM VM	
DEC ChannelServer II (240 V)	
DECnet SNA Gateway-CT V2.0 software license	
DECnet SNA VMS Gateway Management V2.1 software license	
Power cable	
MVS Packaged System for the United States, Canada, Japan	
DECnet SNA VMS Data Transfer Facility Server	DESNB-DA
DECnet SNA Data Transfer Facility for IBM MVS	
DEC ChannelServer II (120 V)	
DECnet SNA Gateway-CT V2.0 software license	
DECnet SNA VMS Gateway Management V2.1 software license	
DECnet SNA VMS Gateway Management V2.1 software license	
U.S., Canada, Japan power cable	

DECnet SNA Integrated Information Access Packages Country Order Codes (Continued)

Option	Order Code
MVS Packaged System for Europe	
DECnet SNA VMS Data Transfer Facility Server	DESNB-DZ
DECnet SNA Data Transfer Facility for IBM MVS	
DEC ChannelServer II (240 V)	
DECnet SNA Gateway-CT V2.0 software license	
DECnet SNA VMS Gateway Management V2.1 software license	
Power cable	

DECnet SNA VMS Distributed Host Command Facility (DHCF)

The DECnet SNA VMS Distributed Host Command Facility (DHCF) access routine allows IBM 3270-class displays connected to an IBM host running the HCF (Host Command Facility) program product in an SNA network to access VAX systems. The IBM system gains access to VAX systems through a DECnet SNA Gateway product. This allows the IBM network manager to control both the IBM and Digital networks from an IBM display terminal. It allows IBM users to access Digital computers and perform VAX functions such as executing VMS commands, reading VAX mail, editing files, and monitoring and controlling VMS processors.

DHCF is available for use with the DECnet SNA Gateway products only.

Ordering Information

▲ Refer to the following sources for further information on supported processors and services:

- Software Product Description 26.71.00
- Unique Product Identifier 043

DECnet SNA VMS Printer Emulator (PrE)

The DECnet SNA VMS Printer Emulator (PrE) access routine allows suitably configured VAX or MicroVAX systems to receive printable data from IBM host-based applications. These applications were originally developed to produce output for an IBM 3287 printer in system mode that is connected to an IBM 3274 cluster controller. Using PrE, either an IBM or Digital terminal user (in 3270 terminal emulation mode) can have a document printed on a Digital printer attached to a local VAX or MicroVAX system.

PrE is available for use with both VMS SNA and the DECnet SNA Gateway products.

Ordering Information

▲ Refer to the following sources for further information on supported processors and services:

- Software Product Description 26.70.00
- Unique Product Identifier 044

DECnet SNA VMS Application Programming Interface (API)

The DECnet SNA VMS Application Programming Interface (API) supports many different types of sessions between VMS or MicroVMS applications and applications running on an IBM host through its support of Logical Unit Type 0 (LU0) sessions. This product can implement the path control, transmission control, and the data flow control layers of SNA for the VMS user. The API also provides extensive parameter checking, state machine management, and other high-level services.

The DECnet SNA VMS Application Programming Interface can be used in either basic or extended mode. Two sets of subroutines are provided with the product: the set for the basic mode supports VMS or MicroVMS application programs written with the V1.x product; the set for the extended mode provides users with an easier-to-use interface than earlier versions of the product.

An API is available for use with both VMS SNA and the DECnet SNA Gateway products.

Prerequisite Software

- VMS operating system V5.0 to V5.1
- DECnet VAX V5.0 to V5.1
- DECnet SNA Gateway-CT, DECnet SNA Gateway-ST, or VMS SNA (DECnet VAX is not required when using VMS SNA)

Ordering Information

▲ Refer to the following sources for further information on supported processors and services:

- Software Product Description 26.86.00
- Unique Product Identifier 455

DECnet SNA VMS Advanced Program-to-Program Communication/LU6.2 Programming Interface (VMS APPC)

The DECnet SNA VMS Advanced Program-to-Program Communication/LU6.2 Programming Interface (VMS APPC) allows program-to-program communications between transaction programs on an IBM host and those on a suitably configured VAX or MicroVAX system. The VMS APPC product is a set of subroutines called by VMS programs acting as Logical Unit 6.2 (LU6.2) transaction application programs. Any of the VMS programming languages conforming to the VMS Calling Standard can be used to write VMS or MicroVMS programs that communicate with IBM applications running under IBM's CICS transaction subsystem. VMS APPC implements both the basic and mapped conversation verb set of LU6.2, using additional parameters to implement the mapped verbs.

VMS APPC is available for use with both VMS SNA and the DECnet SNA Gateway products.

Prerequisite Software

- VMS operating system V5.0 to V5.1
- DECnet VAX V5.0 to V5.1
- DECnet SNA Gateway-CT, DECnet SNA Gateway-ST, or VMS SNA (DECnet VAX is not required when using VMS SNA)

Ordering Information

▲ Refer to the following sources for further information on supported processors and services:

- Software Product Description 26.88.00
- Unique Product Identifier 022

DECnet SNA ULTRIX Advanced Program-to-Program Communication/LU6.2 Programming Interface (ULTRIX APPC)

The DECnet SNA ULTRIX Advanced Program-to-Program Communication/ LU6.2 Programming Interface (ULTRIX APPC) allows program-to-program communications between transaction programs on an IBM host and those on a suitably configured VAX ULTRIX or RISC ULTRIX system. ULTRIX APPC is a set of subroutines called by ULTRIX programs acting as Logical Unit 6.2 (LU6.2) transaction application programs. Thus product supports programs written in C language.

Communications are supported via a DECnet SNA Gateway or ULTRIX SNA.

Features

- Provides a complete LU6.2/Node Type 2.1 solution for building LU6.2 applications in an ULTRIX environment.
- Supports basic and mapped conversation verbs.
- Allows outbound conversation allocation and session initiation from an IBM system.
- Provides both Development Tool Kit and Run-Time Licenses.

Prerequisite Hardware

A valid RISC ULTRIX or VAX ULTRIX configuration. ▲ For more specific communications configuration information, refer to Software Product Descriptions 37.14 and 37.15.

Prerequisite Software

- ULTRIX Operating System V4.2
- One of the following:
  - DECnet SNA Gateway-CT
  - DECnet SNA Gateway-ST
  - ULTRIX SNA

Ordering Information

▲ Refer to the following sources for further information on supported processors and services:

- Software Product Descriptions 37.14 and 37.15
- Unique Product Identifiers:
  - Tool Kit
    MAQ (RISC)
    MAR (VAX)
  - Run-Time
    MAE (RISC)
    MAD (VAX)

DECnet SNA VMS 3270 Data Stream Programming Interface (VMS 3270 DSPI)

The DECnet SNA VMS 3270 Data Stream Programming Interface (VMS 3270 DSPI) allows VMS users to develop programs that use Logical Unit Type 2 (LU2) sessions to communicate with IBM application programs. This product can be used in either of two modes — Data Stream Mode or Field Mode. Data Stream Mode programs send and receive uninterpreted 3270 data streams, as defined by IBM. The VMS program interprets the incoming 3270 data stream and builds the data stream that returns to IBM applications. Field Mode programs interpret the incoming 3270 data stream to build a screen image and produce the 3270 data screen to return to the IBM application from the updated image provide by the VMS application.

VMS 3270 DSPI is available for use with the DECnet SNA Gateways or VMS SNA.

Prerequisite Software

- VMS Operating System V5.0 or later
- DECnet VAX V5.0 or later

- One of the following:
  - DECnet SNA Gateway-CT
  - DECnet SNA Gateway-ST
  - VMS SNA

Ordering Information

▲ Refer to the following sources for further information on supported processors and services:

- Software Product Description 26.87
- Unique Product Identifier 363

DECnet SNA ULTRIX 3270 Data Stream Programming Interface (ULTRIX 3270 DSPI)

The DECnet SNA ULTRIX 3270 Data Stream Programming Interface (ULTRIX 3270 DSPI) allows users to develop programs that use Logical Unit Type 2 (LU2) sessions to communicate with IBM application programs. This product can be used in either of two modes — Data Stream Mode or Field Mode. Data Stream Mode programs send and receive uninterpreted 3270 data streams, as defined by IBM. The ULTRIX program interprets the incoming 3270 data stream and builds the data stream that returns to IBM applications. Field Mode programs interpret the incoming 3270 data stream to build a screen image, and produce the 3270 data screen to return to the IBM application from the updated image provided by the ULTRIX application.

Features

- Supports operations in either Data Stream Mode or Field Mode.
- Supports graphics and color.
- Enables development of file transfer applications using 3270 extended data stream.

Note: ULTRIX 3270 DSPI is supported on DECnet SNA Gateways only; it is not supported by ULTRIX SNA.

Prerequisite Software

- ULTRIX operating system V4.2
- DECnet ULTRIX V4.2
- DECnet SNA Gateway-CT or DECnet SNA Gateway-ST

Ordering Information

▲ Refer to the following sources for further information on supported processors and services:

- Software Product Description 30.64.00
- Unique Product Identifier XD2

DECnet SNA ULTRIX High Level Language Application Programming Interface (HLLAPI)

The DECnet SNA ULTRIX High Level Language Application Programming Interface (HLLAPI) allows ULTRIX users to develop Logical Unit Type 2 (LU2) applications using HLLAPI to communicate with IBM application programs.

HLLAPI is available for use with both the DECnet SNA Gateways and ULTRIX SNA.

Features

- Enables session selection and keystroke intercept.
- Supports file transfer.
- Supports applications such as automatic data entry systems or multihost distributed applications.
- Provides both Development Tool Kit and Run-Time licenses.

Prerequisite Hardware

A valid RISC ULTRIX or VAX ULTRIX configuration. ▲ For more specific communications configuration information, refer to Software Product Descriptions 37.16 and 37.17.

Prerequisite Software

- ULTRIX Operating System V4.2
- One of the following products:
  - DECnet SNA Gateway-CT
  - DECnet SNA Gateway-ST
  - ULTRIX SNA

Ordering Information

▲ Refer to the following sources for further information on supported processors and services:

- Software Product Descriptions 37.16 and 37.17
- Unique Product Identifiers:
  - Tool Kit
    MAG (RISC)
    MAF (VAX)
  - Run-Time
    MAJ (RISC)
    MAH (VAX)

DECnet SNA FLASH/IMS Programming Interface (FPI)

The DECnet SNA FLASH/IMS Programming Interface (FPI) is a layered software package that enables high-level, task-to-task message exchange between cooperating VMS and IMS applications.

FPI facilitates creation of distributed applications where one component of the application runs on an IBM IMS system and another component runs on a VMS system. It is suitable for developing high-performance, realtime, and inquiry-response applications.

Layered on the DECnet SNA VMS Application Programming Interface (API) software, the FPI software exists on the VMS system as a shareable subroutine library.

Features

- Provides mechanisms for applications to perform session-level recovery in the event of communications failure, ensuring data integrity across sessions and prevents loss or duplication of messages.
- Supports synchronous and asynchronous calls as well as inbound/outbound session activation and multiple SNA sessions per user process.
- Has a high-level callable interface that conforms to VMS calling standard.
- Implements the SLU-type P protocol.
- Performs default translation between ASCII and EBCDIC.
- Allows user-definable translation tables.

Availability

This product is available in the United States only.

Prerequisite Hardware

- Any valid VAX or MicroVAX system configuration.
- Access between the cooperating Digital and IBM applications is via a DECnet SNA Gateway or VMS SNA software.

Prerequisite Software

- VMS operating system V4.6 to V5.0 or MicroVMS operating system V4.6 to V4.7 and DECnet SNA VMS Application Programming Interface.
- For IBM software, any valid IBM system that supports Digital's DECnet SNA VMS Application Programming Interface.

Ordering Information

For ordering information contact your local Digital sales office.

▲ Refer to the following sources for further information on supported processors and services:

- Software Product Description 26.86.00
- Unique Product Identifier TAM

VIDA for DB2

VIDA for DB2 is a client/server software product that provides direct read-only access to an IBM mainframe DB2 database from Rdb/VMS applications. VIDA for DB2 is a member of the Digital Rdb Access family of Rdb/VMS interoperability gateway products. VIDA users can access DB2 data through products such as VAX DATATRIEVE, DECdecision, VAX RALLY, or Rdb/VMS SQL applications. VAX Data Distributor can be used with VIDA to extract and duplicate DB2 databases in Rdb/VMS.

VIDA for DB2 consists of two components. VIDA Client operates in the VMS environment processing user requests and directing them to the IBM mainframe. VIDA Server runs as a CICS transaction in the IBM MVS environment accessing data from DB2. The two VIDA components communicate using Digital's VMS SNA or DECnet SNA Gateway products.

Prerequisite Hardware

Digital hardware: any valid VAX, MicroVAX, VAXserver, or VAXstation system configuration and 802.3/Ethernet-based VMS SNA or DECnet SNA Gateway.

IBM hardware: any valid S/370 or ESA/390 IBM system configuration.

Prerequisite Software

Digital software: VMS operating system V5.2 or later and DECnet SNA VMS APPC/LU6.2 Programming Interface V2.2 or later. VAX Rdb/VMS V3.1 to V4.0 Full Development Option is required to develop applications for use with VIDA for DB2. ▲ Refer to Software Product Description 27.E7.00.

IBM Software: CICS/OS/VS V1.7 or CICS/MVS V2.1, DB2 V1.3 to V2.2, SMP/E V4, Assembler H. An MVS (SP/XA/ESA) operating system that supports DB2 and CICS.

Ordering Information

▲ Refer to the following sources for further information on supported processors and services:

- Software Product Description 25.E7.00
- Unique Product Identifiers:
  - VIDA Client for DB2: VTW
  - VIDA Server for DB2: VTX

DEC RdbAccess for VAX RMS on VMS, Version 2.0

Version 2.0 of DEC RdbAccess for VAX RMS on VMS now provides direct read-write SQL access to RMS files. Known as RdbAccess for VAX RMS, this product also provides a read-only VAX SQL access gateway to IBM VSAM (and some non-VSAM) data sets. Applications using this product can perform relational operations such as selects, sorts, joins, and projects on a single RMS or VSAM file, or on multiple files.

With Version 2.0, transaction semantics have been added to RdbAccess for VAX RMS, including two-phase commit support for accessing multiple resource managers. The rollback operation is supported for files for which RMS journaling is enabled.

RdbAccess for VAX RMS is based on the RdbAccess Non-SQL Data Server architecture, which defines a general-purpose mechanism for integrating non-relational data sources into the Digital Database architecture. RdbAccess for VAX RMS uses CDD/Plus as the source of data descriptions and combines these with the file data to emulate relational operations and enable SQL access.

Features

- Addition of an Index Key Optimizer — Faster response time by efficient use of available RMS Indexes.
- Transaction Support — Promotes data integrity, including two-phase commit.
- Support for the CDD/Plus OCCURS Clause — SQL access to files with groups of fields that can repeat multiple times.
- Support for Cross Database Inserts between Rdb/VMS Tables and RMS Files — Improves ease of data management in applications using both RMS and Rdb/VMS.
- Use of FILLER fields in dictionary to hide columns — Protects sensitive data.

Prerequisite Hardware

Runs on all VAX, VAXserver, VAXstation, and MicroVAX systems that are supported by the required version of VMS software.

Prerequisite Software

- VMS V5.3 to V5.5
- CDD/Plus V4.2
- For access to IBM MVS data sets (VSAM and certain non-VSAM), the customer also needs the DECnet SNA Data Transfer Facility (DTF) V2.0 and its associated prerequisites.
- Rdb/VMS Run-time license included with VMS

Ordering Information

▲ Use the software order code template in this section when building an order code number from the software Unique Product Identifier (UPI). Refer to the Software Product Description (SPD), or consult your local sales representative to determine whether the software application ordered is supported by the processor for which it is intended.

- Software Product Description 32.88.01
- Unique Product Identifier YQZ

SQL Access Server for Rdb/VMS

SQL Access Server for Rdb/VMS is Digital's first product offering based on specifications for remote database access that have been developed by The SQL Access Group, a consortium of more than 40 software development companies.

The SQL Access model, developed by The SQL Access Group is an open architecture providing application programs with read/write access to data in multiple relational database management systems.

The SQL Access model is based on client/server architecture. The SQL Access Server for Rdb/VMS enables SQL Access client applications on any platform to perform read and write access to data in any Rdb/VMS database on the network. Information that is passed between the client and the server implements the Remote Database Access (RDA) protocol published by ISO (ISO DIS 9579-1 and ISO DIS 9579-2).

Features

- Read/write access to RMS files via RdbAccess for RMS.
- Read access to VSAM files via RdbAccess for RMS and DECnet SNA Data Transfer Facility (DTF).
- Read access to DB2 files via VIDA for DB2.
- Read access to ORACLE files via RdbAccess for ORACLE.

The SQL Access Server consists of a multithreaded communications server and a pool of execution servers. The execution servers are detached processes that perform the actual database work on behalf of the client applications.

A single system-wide log file is used to help the system manager understand the system load for correct set up and tuning by means of a configuration file.

Prerequisite Hardware

Processors and/or hardware configurations as specified in the System Support Addendum (SSA 40.89.00)

Prerequisite Software

- VMS Operating System V5.4 to V5.5
- DECnet VAX Version 5.4 Extensions (providing VAX OSI Applications Kernel and VAX OSI Transport Service)
- VAX Rdb/VMS V4.0 or V4.1

▲ Refer to the System Support Addendum (SSA 40.89.00-A) for availability and required versions of prerequisite/optional software.

Ordering Information

▲ Use the software order code template in this section when building an order code number from the software Unique Product Identifier (UPI). Refer to the Software Product Description (SPD), or consult your local sales representative to determine whether the software application ordered is supported by the processor for which it is intended.

- Software Product Description 40.89.00
- Unique Product Identifier MPQ

Jnet

Jnet, developed by Joiner Associates and distributed by Digital through the Digital Distributed Software (DDS) program, is a communications package that provides Network Job Entry (NJE) functions for VAX systems, allowing the VMS nodes to communicate with other systems on an NJE network.

Features

Jnet provides the Network Job Entry (NJE) functions for VAX systems. The supported functions include

- Electronic mail exchange with VMSmail and ALL-IN-1.
- Unsolicited store-and-forward file transfer and receipt.
- Batch job submission.
- Print job submission.
- Real-time communication among network users/processes.
- NJE network management and monitoring.

Jnet is a VMS layered application that communicates with other VAX systems running Jnet over DECnet or OSI networks. When configured with appropriate optional link drivers, Jnet can communicate with other multivendor systems running NJE. Jnet can exchange information with any other system on the same NJE network. These systems can include IBM mainframes and Control Data Jnet. Jnet maintains the security environment of each networked system, while isolating users from the complexities of the network.

Prerequisite Hardware

- Any valid VAX system configuration

Prerequisite Software

- VMS operating system V4.4 or later
- To communicate with other VAX VMS Jnet nodes: either DECnet VAX or VAX OSAK

Optional Software

- For BSC NJE and VMB links: Jnet BSC/370
- For SNA Access links: Jnet SNA Access, DECnet SNA Gateway, or VMS SNA
- For BSC links to an AS/400 or System/3X: Jnet BSC/400
- For TCP/IP links: Jnet TCP NJE

Availability

This product is available worldwide.

Ordering Information

▲ Refer to the following sources for further information on supported processors and services:

- Software Product Description 34.01.01
- Unique Product Identifier YVN

Jnet BSC/400

Jnet BSC/400, developed by Joiner Associates and distributed by Digital through the Digital Distributed Software (DDS) program, is an optional link driver that works in conjunction with Jnet to provide NJE functions between VAX systems running Jnet and AS/400s or System/3xs over a bisynchronous link. Like Jnet, Jnet BSC/400 is a VMS layered application.

Features

Key features provided by BSC/400, in conjunction with Jnet, include

- Electronic mail exchange between Office Vision 400 (or AS/400 Office), BITNET, and VMSmail or ALL-IN-1.
- Bidirectional binary and text file transfer.
- Bidirectional, remote submission of batch and print jobs.
- Real-time message facility.

Prerequisite Hardware

A valid VAX system configuration and one of the following synchronous interfaces:

- DMF32
- DPV11
- DMB32
- DSV11

On an IBM AS/400: AS/400 Communications Utilities with the RSCS/PROFS bridge

Prerequisite Software

- VMS operating system
- For systems using DMB32 or DSV11 interfaces — VAX WAN Device Drivers
- Jnet V3.4 or later

Availability

Jnet BSC/400 is available worldwide.

Ordering Information

Refer to the following sources for further information on supported processors and services:

- Software Product Description 34.02.01
- Unique Product Identifier YVQ

Jnet BSC/370

Jnet BSC/370, developed by Joiner Associates and distributed by Digital through the Digital Distributed Software (DDS) program, is an optional link driver that works in conjunction with Jnet to provide Network Job Entry (NJE) functions between VAX systems and IBM S/370 systems over a bisynchronous communications line. Supported functions include file transfer, electronic messaging, and batch/print submission. BSC/370 includes two link drivers: VMB and NJE. VMB connects VAX systems to IBM systems running the VM-to-VM BSC protocol. NJE connects VAX systems to IBM systems running NJE protocol.

Prerequisite Hardware

A valid VAX configuration

Prerequisite Software

Jnet V3.4 or later

Optional Software

WAN Device Drivers

Availability

BSC/370 is available worldwide.

Ordering Information

Refer to the following sources for further information on supported processors and services:

- Software Product Description 34.03.01
- Unique Product Identifier YVP

Jnet TCP NJE

Jnet TCP NJE, developed by Joiner Associates and distributed by Digital through the Digital Distributed Software (DDS) program, is an optional link driver that works in conjunction with Jnet to provide Network Job Entry (NJE) functions over TCP/IP networks. This link driver enables VAX systems running VMS and Jnet to communicate with other systems that support the BITNET II protocol. Supported functions include file transfer, electronic messaging, and batch/print submission. Jnet TCP NJE allows NJE networks such as BITNET to utilize existing wide area TCP/IP networks for transports such as NSFnet.

Prerequisite Hardware

- A valid VAX configuration

Prerequisite Software

- VMS operating system
- Jnet: one of the following TCP/IP software products:
  - Carnegie Mellon University CMU-TEK TCP/IP
  - TGV Multinet
  - The Wollongong Group WIN/TCP for VMS

Availability

Jnet TCP NJE is available worldwide.

Ordering Information

Refer to the following sources for further information on supported processors and services:

- Software Product Description 34.04.01
- Unique Product Identifier YVR

Jnet SNA NJE

Jnet SNA NJE, developed by Joiner Associates and distributed by Digital through the Digital Distributed Software (DDS) program, is an optional link driver that works in conjunction with Jnet to provide Network Job Entry (NJE) functions between VAX systems and IBM mainframe systems in an SNA environment. It uses the transport services of a DECnet SNA Gateway or VMS SNA to establish the link between the Digital and IBM environment. Supported functions include file transfer, electronic messaging, and batch/print submission.

Prerequisite Hardware

- A valid VAX configuration.
- For VAX systems not running VMS SNA, a DECnet SNA Gateway is required.
- For MicroVAX II and VAXserver systems and VAXstation II workstations running VMS SNA, a DPV11 is required for each SNA link to a remote system.
- For VAXBI systems running VMS SNA, a DMB32 is required for each SNA link to a remote system.

Prerequisite Software

- VMS operating system V4.2 or later
- Jnet V3.3 or later
- DECnet SNA VMS Application Programming Interface V2.1 or later
- For DECnet SNA systems not connected to the DECnet SNA Gateway, VMS SNA V1.1 or later is required

Availability

Jnet SNA NJE is available worldwide.

Ordering Information

Refer to the following sources for further information on supported processors and services:

- Software Product Description 34.05.01
- Unique Product Identifier YVV

The communications used in this group of products is a subset of IBM's Binary Synchronous Communications (BSC) protocol. Access to an IBM host system can be either via batch or interactive methods. Horizontal Format Control records can be received and processed. A subset of Vertical Format Control escape sequences is supported; specifically, single, double, and triple space, form feed, and space suppress. In most cases, any block-addressable storage device supported by the Digital system can be used as a source of transmission files with fixed length (80-character card image), variable length transmitted as either EBCDIC (automatically translated from ASCII), or binary data (no translation). BSC control characters are automatically added to the data before transmission and stripped upon reception. ▲ Refer to Software Product Description 25.07 for more information.

VAX 2780/3780 Protocol Emulator

The VAX 2780/3780 Protocol Emulator supports the synchronous line protocol used by an IBM 2780 or 3780 Remote Batch Terminal. The emulator provides the VMS user with a mechanism for transferring data between the VMS operation system and another system equipped to handle 2780 or 3780 communications protocols.

The following IBM remote batch terminal features are supported: 2780 Extended and Multiple Record Option

- Variable Horizontal Forms Control
- BSC Transparency
- 3780 Space Compression

The VAX 2780/3780 Protocol Emulator can run up to four physical lines concurrently, each with a different set of attributes. For example, some lines may connect to 2780 terminals, others to 3780 terminals, at speeds up to 9.6 Kb/s per line (4.8 Kb/s for MicroVAX II).

Features

- Can be invoked interactively or by a VMS command procedure.
- Command set designed to facilitate sharing a communication line among several users to reduce network costs.
- With the appropriate modem options, the emulator can automatically answer incoming calls.
- Using a combination of command procedures, the emulator can operate unattended and is capable of:
  - Detecting an incoming call
  - Establishing the connection
  - Transmitting and receiving files
  - Recovering from transmission failures

Prerequisite Hardware

One of the following:

- A MicroVAX or VAXstation system with DPV11 communications interface.
- A VAX-11/700 system (except VAX-11/725) with DMF32 communications interface; or a VAX-11/725 with a DMF32 communications interface. The VAX-11/730 requires an R80/RL02 configuration.

- A VAX 8000-series system with a DMF32 or DMB32 communications interface.

Optional Hardware

- For MicroVAX or VAXstation, up to two additional DPV11 communications interfaces.
- For VAX-11/780, VAX-11/782, VAX-11/785, VAX 8600, or VAX 8650, up to three additional DMF32 communications interfaces.
- For VAX-11/750, one additional DMF32 communications interface.
- For VAX 8200 or VAX 8300, one additional DMF32 or DMB32 communications interface.
- For VAX 8530, VAX 8550, VAX 8700, or VAX 8800, up to three additional DMF32 or DMB32 communications interfaces.

Prerequisite Software

- For MicroVAX and VAXstation systems, MicroVMS with Extended Base component and Program Development component.
- For VAX systems, VMS and, if using the DMB32, the DMB32 Synchronous Device Driver.

Ordering Information

▲ Refer to the following for further information on supported processor and services:

- Software Product Description 25.07
- Unique Product Identifier 111

VAX 3271 Protocol Emulator

VAX 3271 Protocol Emulator enables VT100 users (or users with Digital terminals or personal computers that emulate the VT100) on a VMS system to communicate interactively with application programs running on an IBM System 370-class host. The 3271 Protocol Emulator can run with IMS/VS, CICS/VS, or TSO, and allows users to implement applications performing remote, online access to IBM databases for data entry, retrieval and update. This capability is an especially efficient migration tool in the transition phase for users who are implementing distributed processing by moving applications from centralized mainframes to VAX distributed processors. The application program interface provides a base for distributed applications where one component of the application runs on an IBM system and the other on a VAX. This type of application is useful in situations such as online access and update of a mainframe database in response to an event in the VAX system. ▲ Refer to Software Product Description 25.21 for detailed information.

Features

- Manages the modems and line protocols and provides an easy-to-use interface.
- The application program support interface provides online access to a mainframe database.
- Executes the WRITE, GENERAL POLL, and SPECIFIC POLL command sequences.

- Allows the system manager to control and monitor the activity of the emulator.
- The 3270 Terminal Emulation utility causes a screen display transmitted from the IBM system to be displayed on the Digital terminal in a fashion similar to the display on a 3270, and maps the Digital terminal keyboard to simulate the 3270 keyboard.

Prerequisite Hardware

One of the following:

- A MicroVAX or VAXstation system with DPV11 communications interface.
- A VAX-11/700 system (except VAX-11/725) with a DMF32 communications interface, or a VAX-11/725 with a DMF32 communications interface. The VAX-11/730 requires an R80/RL02 configuration.
- A VAX 8000-series system with a DMF32 communications interface.

Optional Hardware

- For MicroVAX or VAXstation, up to two additional DPV11 communications interfaces.
- For VAX-11/780, VAX-11/782, VAX-11/785, VAX 8600, or VAX 8650, up to three additional DMF32 communications interfaces.
- For VAX-11/750, one additional DMF32 communications interface.
- For VAX 82xx or VAX 83xx, one additional DMF32 communications interface.
- For VAX 8530, VAX 8550, VAX 87xx, or VAX 88xx, up to three additional DMF32 communications interfaces.

Prerequisite Software

- For MicroVAX I, MicroVAX II, and VAXstation II systems, MicroVMS with Extended Base component and Program Development component.
- For VAX systems, VMS operating system.

Ordering Information

▲ Refer to the following for further information on supported processor and services:

- Software Product Description 25.21
- Unique Product Identifier 112

RSX-11M/RSX-11M-PLUS RJE/HASP Emulator

The RSX-11M/RSX-11M-PLUS RJE/HASP Emulator is a software package that performs the standard functions of an IBM HASP Remote Job Entry Workstation. It operates as a set of tasks under the RSX-11M-PLUS operating system.

The emulator provides multileaved (pseudo-simultaneous, bidirectional) communication of up to seven input and seven output data streams. The number of input and output streams accommodated by the emulator is fixed at assembly time. The operator can assign operating, supported devices to data streams on a per-file or temporarily-dedicated basis.

Features

- Data compression of repeated sequential characters including blanks.
- Full EBCDIC transparency.

- Multileaving.
- Printer vertical forms control skip to Channel 1 (top of form) is supported (no other vertical forms control is supported).

Prerequisite Hardware

- PDP-11/44 or PDP-11/70 with at least 128 Kwords of memory configured to support RSX-11M-PLUS.
- A KG11-A communications arithmetic unit.
- A tape drive capable of reading the distribution media.
- At least 14 Kwords of memory allocated for RSX-11M-PLUS RJE/HASP operation with one input and two output streams.
- 600 words of memory required for each additional stream with File Control Services (FCS).
- One of the following synchronous communications line controllers: DP11 or DU11 for line speeds up to 4.8 Kb/s.
- One of the following Bell System modems or a modem that is exactly equivalent:
  - 201A 2.0 Kb/s dialup
  - 201B 2.4 Kb/s private line
  - 201C 2.4 Kb/s dialup
  - 208A 4.8 Kb/s private line
  - 208B 4.8 Kb/s dialup
  - 209A 9.6 Kb/s private line
  - 19.2 Kb/s current Bell

▲ For host system compatibility, consult Software Product Description 10.48.

Prerequisite Software

RSX-11M or RSX-11-PLUS operating system

▲ Refer to the cross reference table in Software Product Descriptions 20.98 (RSX-11M) or 20.99 (RSX-11M-PLUS) for the required version.

Ordering Information

▲ Refer to the following for further information on supported processor and services:

- Software Product Description 10.48
- Unique Product Identifier 563

Overview

One of the fundamental technologies used in data networks is called packet switching. With it, user data and the accompanying control information needed to ensure delivery are formed into discrete entities called packets. The network dynamically interweaves the packets of many users over shared transmission facilities and routes the packets to their destinations.

Packet Switched Data Networks (PSDNs) can be public or private. A public PSDN is the computer's analogy to the telephone: once connected to the PSDN, calls can connect to any other number on that network, or to any number on another public PSDN that is crossconnected to it (for example, for international data communication). Calls can be normally or reverse-charged, and the customer pays a tariff related to time-of-day, number called, and duration and amount of data. The tariff structures vary considerably between public PSDNs, but the data charges are generally more significant than either time- or distance-factors.

Private PSDNs are owned and operated by one company or group of companies, for intra- rather than inter-company communications. Otherwise, they offer the same general features as their public counterparts.

Digital's packet switching products extend the high-level DECnet functions of Digital's Network Architecture (DNA) to computer systems communicating across PSDNs. The currently available products are:

- DEC X25router 2000
- VAX P.S.I. and VAX P.S.I. Access
- X.25 Native Mode for ULTRIX
- X.25 Gateway Client for ULTRIX
- DEC X25gateway 100/500

These products allow suitably configured Digital systems to connect to Packet Switched Data Networks that conform to the CCITT Recommendation X.25. (CCITT is the International Telephony and Telegraphy Consultative Committee, an advisory committee established under the United Nations to recommend worldwide standards.) VAX P.S.I., the DEC X25router 2000, and the DEC X25gateway 100/500 also support International Standards 7776 and 8208, which standardize the protocols described in the CCITT Recommendations.

Features

Packet Switched Data Networks offer a number of benefits to a customer looking for low-to-medium data communications rate to a reasonable number of remote locations, and in particular, when the remote locations tend to be undefined. These benefits can include:

- Reduced complexity of wiring — only one physical line can handle multiple calls simultaneously, to the same or different remote locations.
- The same network can handle computer-to-computer and terminal-to-computer traffic.
- The tariff is less than leased lines if the data rate to the remote site is relatively low.
- Because it is an internationally recognized protocol, X.25 can be used as a common carrier for multiple protocols, avoiding duplication of networks.

- A level of multivendor operation, especially when used to carry Open System Interconnection (OSI) protocols above the basic X.25 protocols.
- Simpler network management as a result of reduced proliferation of lines and protocols.

Applications

Applications where packet-switching communications technology is particularly suitable include:

- Dial-in access to or from the general public.
- Any OSI applications such as electronic mail to customers or other third parties. ▲ For an introduction to Packet Switched Data Networks and the user benefits associated with their use, refer to *Introduction to VAX P.S.I.* or *Introduction to DEC X.25 for ULTRIX."* Consult your local Digital Sales representative.

For connections to private networks other than those conforming to the ISO 7776/8208 standards, Digital requires that its P.S.I. software be specifically configured. Consult your local Digital sales representative for details.

Native, Client, and Connector Modes

Digital's Packetnet products can act in three ways, each giving different configuration benefits. These ways are referred to as native mode, client mode, and connector mode.

A native-mode configuration is a standalone CPU with direct connection to one or more PSDNs. It may have other DECnet connections, but the essential point is that all communications to or from any PSDN originate or terminate in that same CPU. The following figure shows a native mode configuration.

Native-Mode Operation

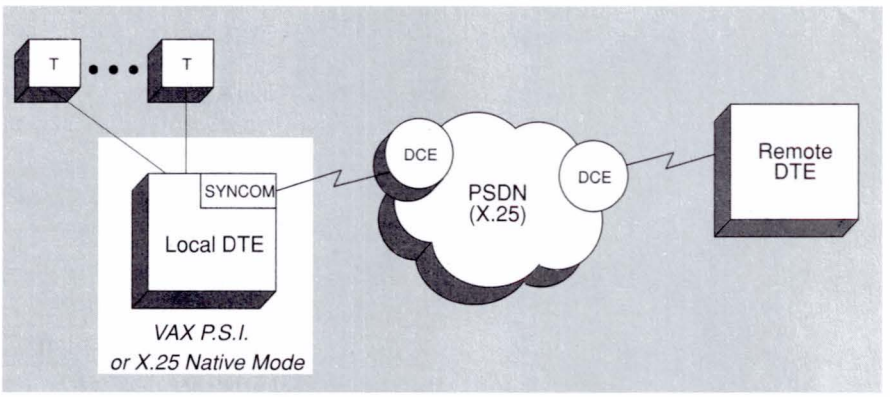

TBG-075-00

Client mode allows communications to take place to or from a PSDN that is not directly connected to that CPU. The PSDN is connected to another node, called a connector node, and the connector node communicates with the client node via DECnet or OSI protocols (usually, but not necessarily, over an 802.3/Ethernet local area network). The following figure shows VAX P.S.I. Access or X.25 Gateway Client in such a configuration.

Access Mode Operation

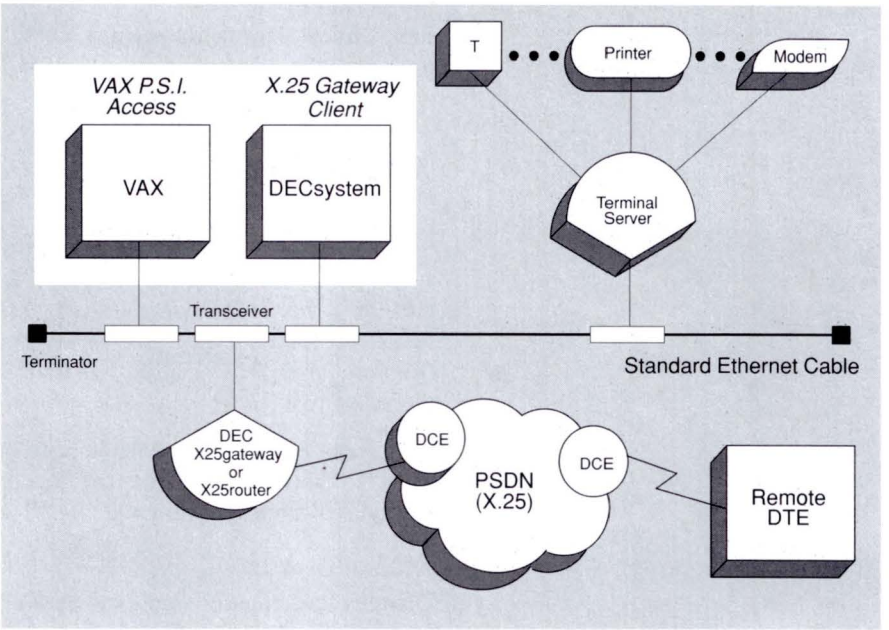

TBG-076-00

The following table indicates the mode of the various Digital Packetnet products.

Comparison of Modes for Packetnet Products

Product	Native Mode	Client Mode	Connector Mode
DEC X25router 2000	No	No	Yes
VAX P.S.I.	Yes	No*	Yes
VAX P.S.I. Access	No*	Yes	No*
X.25 Native Mode.	Yes	No	No
X.25 Gateway Client	No	Yes	No
DEC X25gateway 100/500	No	No	Yes

* VAX P.S.I. and VAX P.S.I. Access can be installed in the same system to provide combined native, connector, and client mode facilities.

How to Choose Between Host and Gateway X.25 Connections

The following table summarizes the trade-offs and benefits of the two approaches to X.25 communications in an 802.3/Ethernet environment: direct connection between a PSDN and the system that needs to access it; and indirect connection using client and connector modes.

Comparison of Direct and Connector Packetnet Connection		
	Native Mode/ Direct Connection	**Client and Connector Modes/ Indirect Connection**
Cost of Connections	One per system	One shared between all systems on 802.3/ Ethernet LAN
Cost of Devices	One set per system; may be limited in speed as a result of cost factors	Shared devices on the connector node(s); possible to use fewer, higher-speed lines
Technology Considerations	Specific to each system concerned; may need to change if processor types change	Specific to the connector node only; no change needed if other processors change
DECnet Communication	Requires a DECnet full-function license per system	Handled entirely in one connector node; only end-node licenses needed elsewhere
X.25 or X.29 Communication	Uses VAX P.S.I. or X.25 Native Mode on all connected nodes	Uses P.S.I. Access or X.25 Gateway Client on all other nodes
	No user differences in X.25/X.29 application interfaces/code; applications are portable between VAX P.S.I. and P.S.I Access nodes or between X.25 Native Mode and X.25 Gateway Client	
CPU Overhead: Routing DECnet (DLM) Data Traffic	Can be significant on the directly connected nodes	Handled entirely in the connector node traffic
CPU Overhead: X.25 Task-to-Task and X.29 Terminal Traffic	Optimal when using Direct Memory Access (DMA) devices	Sometimes higher on access nodes as a result of DECnet overhead

The benefits of using an indirect connection increase when both DECnet and X.25 communication are required by several systems. In some cases, a combination of direct and indirect connections may sometimes be best.

If an access/connector solution is indicated, the following table shows the benefits of choosing between different connector nodes, that is, VAX P.S.I. in multihost mode and the DEC X25router or DEC X25gateway 100/500 products.

Comparison of X.25 Connector Node Products

	VAX P.S.I. Multihost	**X25router/gateway**
Type of Solution	Existing VMS system may be used	Dedicated server on the 802.3/Ethernet
Technology	General purpose system	Specific hardware
Public PSDNs Supported	Many	Many
Number of Lines and Line Speeds	Not limited, but depends on system used	Four lines at 64 Kb/s or two lines at 256 Kb/s
DECnet Communication	Requires DECnet full-function license Supports Level 1 (local) or Level 2 (area) routing DDCMP lines require extra devices	Handled entirely in the router node* Supports Level 1 (local) and Level 2 (area) routing Supports up to four DDCMP lines
CPU Overhead in the Access Nodes	No difference between the two solutions	
CPU Overhead in the Gateway Node	Can be significant, depending on the VAX system	Puts the CPU load on the gateway rather than on a VMS or ULTRIX system
Load Host	Not required	VMS, ULTRIX

*DEC X25router node only

Multivendor Aspects

Because many networks contain multivendor systems, Digital fully supports the concept of cooperative computing via the Packetnet family of products. These products provide extended X.25 capabilities including communications with multivendor hosts and asynchronous terminals connected to the X.25 network.

The configuration shown in the figure on the following page enables the following communications:

- Digital-to-Digital communications using X.25 between the DEC X25router 2000 at New York, the Houston DECsystem running X.25 Native Mode, and the Los Angeles VAX P.S.I. node. Also, DECnet routing on the two 802.3/Ethernet local area networks means that the use of the X.25 PSDN is transparent to users on other 802.3/Ethernet nodes at New York and Los Angeles.
- Customers can write applications to communicate between a VAX P.S.I. Access node on the local area network and any Digital or multivendor node connected to the PSDN. The same is true for OSI applications, subject to support of such in all nodes concerned.
- Terminals connected to VAX hosts on the 802.3/Ethernet local area networks, or the ULTRIX node at Houston, can make outgoing calls to log into any Digital or multivendor node on the PSDN, or any VAX P.S.I. Access node on the local area network.
- Remote terminals on the PSDN can use Packet Assemblers/Disassemblers (PADs) to place calls into any Digital or multivendor node connected to the PSDN, including the ULTRIX node at Houston. These calls can access any VAX P.S.I. Access node on the 802.3/Ethernet local area network. The PADs may be public PADs provided as a part of the PSDN service, accessible through dedicated or dialup telephone connections or, depending on PSDN policies, a customer-owned private PAD connected to the PSDN by a synchronous leased line. ▲ Refer to Section 4 for more information on Packet Assemblers/Disassemblers.

Packetnet Communications Including Multivendor Computers

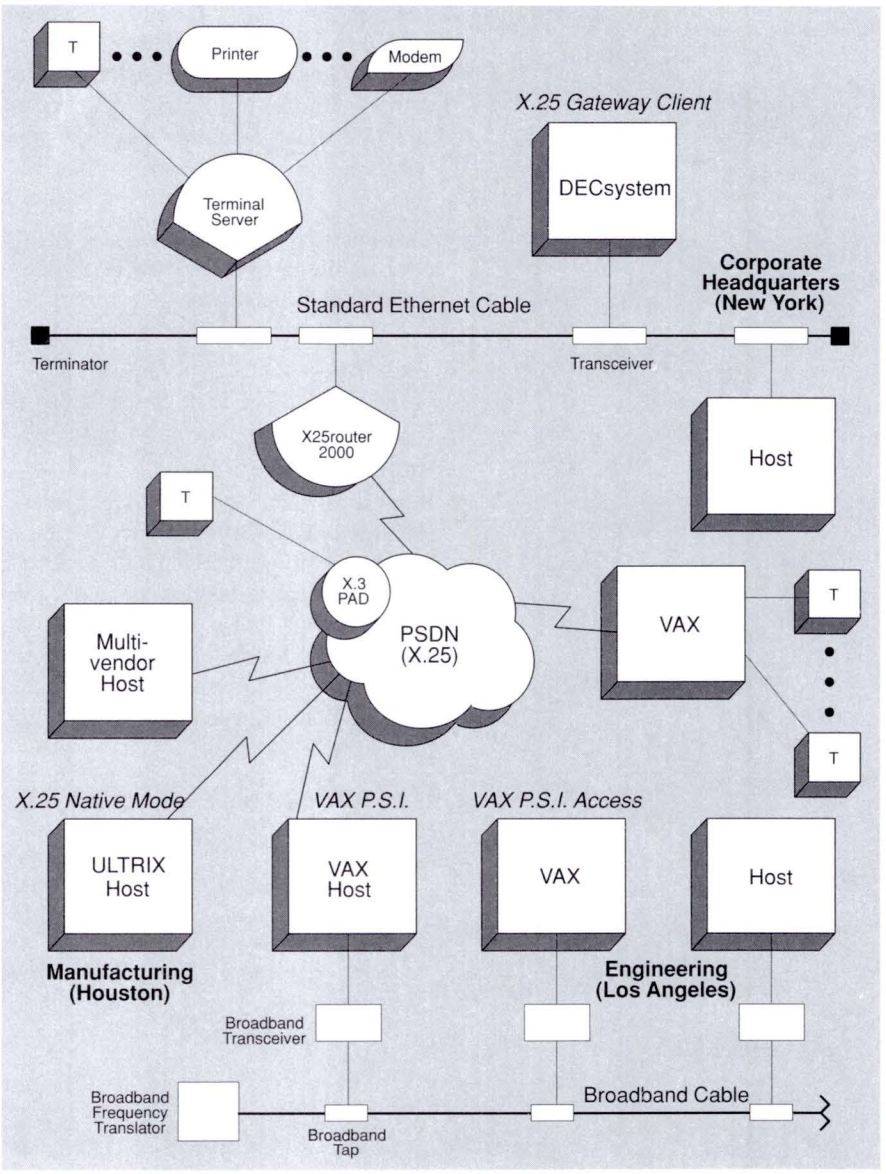

TBG-077-00

Currently Supported PSDNs

Please refer to the specific Software Product Descriptions for a list of supported PSDNs. ▲ Consult your local Digital sales office for the latest additions to this list.

DEC X25router 2000
DEC X25gateway 100/500

The DEC X25router 2000 and the DEC X25gateway 100/500 are combination hardware/software products that provide access to one or more PSDNs for any system on the LAN that runs a supported X.25 Client or Access product. The DEC X25router 2000 also allows DECnet communications with remote Digital systems by routing DECnet traffic over the PSDN. ▲ Refer to Section 2, "802.3/Ethernet Communications Routers, Bridges, and Gateway Services," for more information on the DEC X25router 2000 and the DEC X25gateway 100/500.

VAX P.S.I. and VAX P.S.I. Access

Both options enable process-to-process and terminal communications between a VAX and remote Data Terminal Equipment (DTE) in a PSDN supporting the X.25 interface protocol. VAX P.S.I. also enables direct connection to equipment acting as either Data Circuit Terminating Equipment (DCE) or DTE using the ISO 7776/8208 protocols.

VAX P.S.I.

VAX P.S.I. allows a standard VMS system to use X.25 connections to any number or combination of the following:

- One or more DTEs (lines) connecting to X.25 PSDN(s) conforming to the CCITT X.25 Recommendations (1978, 1980, or 1984).
- Point-to-point connections to one other DTE or DCE conforming to the ISO 7776/8208 protocols.

Most facilities and options of the CCITT Recommendations can be supported with VAX P.S.I. Refer to the Software Product Description for details.

VAX P.S.I. can be configured for either multihost or native mode operations. When installed in native mode, VAX P.S.I. supports access to the PSDN or DTE only from processes in the VAX processor on which it is installed. When installed in multihost mode in a DECnet-VAX node, VAX P.S.I. acts as a connector node to the PSDN or DTE, supporting access to the network by other properly configured local or remote VAX hosts. These additional hosts may be DECnet or ADVANTAGE-NETWORKS hosts on which suitable X.25 client software has been installed.

VAX P.S.I. is a layered VMS product and may be used in the following ways:

- Process-to-process (X.25) communication
- Process-to-terminal communication (remote terminal)
- Terminal-to-process communication (remote CPU)
- Full DECnet communication (Digital remote hosts only)
- As part of an OSI multivendor communications environment (when used with Digital's OSI products)

For all the uses above, VAX P.S.I. provides accounting, security, and P.S.I. Mail.

VAX P.S.I. is available both for DECnet Phase IV systems and ADVANTAGE-NETWORKS systems. ▲ Refer to Software Product Description 25.40.00 for more information about VAX P.S.I. for DECnet Phase IV systems, and to Software Product Description 29.03.00 for more information about VAX P.S.I. for ADVANTAGE-NETWORKS systems.

VAX P.S.I. Native Mode of Operation

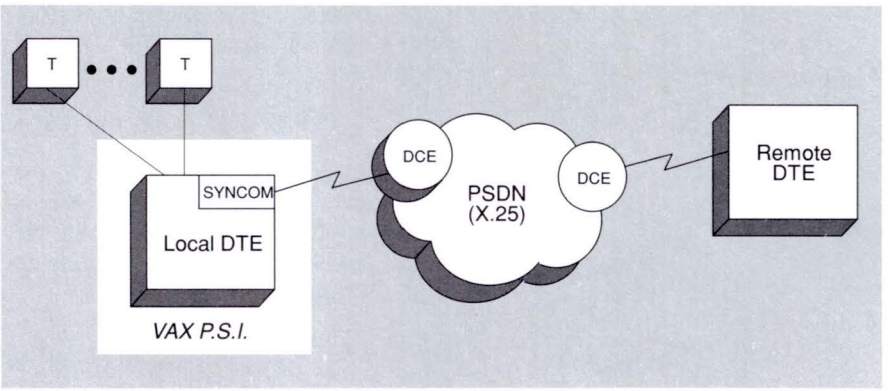

TBG-075-00

VAX P.S.I. Access

VAX P.S.I. Access allows a properly configured DECnet-VAX system in a DECnet environment to make logical connections to PSDNs by way of one or more other P.S.I. connector nodes. VAX P.S.I. Access, with the connector node providing physical connections to a PSDN, enables process-to-process and terminal communications between the accessing VAX and remote DTE. The P.S.I. connector node may be one of the following:

- VAX P.S.I. installed in multihost mode. The corresponding version of VAX P.S.I. and VAX P.S.I. Access is required for full functionality, though basic communication will take place with earlier versions of VAX P.S.I.
- A DEC X25router 2000 or a DEC X25gateway 100/500. ▲ Refer to Software Product Description 28.86.00 for details about the DEC X25router 2000, and to Product Description 32.97.00 for details about the DEC X25gateway 100/500. DECnet logical links are established by VMS to connect the VAX P.S.I. Access host to the connector node. These links may use any supported DECnet communications path between the VAX P.S.I. Access node and the connector node, provided they do not themselves use an X.25 connection. VAX P.S.I. Access uses these links to transmit X.25/X.29 messages between the connector node and the VAX P.S.I. Access host.

  A single VAX P.S.I. Access host can logically connect to one or more connector nodes concurrently and hence access all PSDNs accessible from those connector nodes. During installation of VAX P.S.I. Access, one of these connector nodes/PSDN combinations is established as the default DTE/DCE connection that outgoing calls will normally use.

VAX P.S.I. Access provides all of the user interfaces of the full-function VAX P.S.I. product, with the ability to utilize these interfaces from a DECnet-VAX node not directly connected to the PSDN. If such connection to a PSDN is necessary, the full-function VAX P.S.I. product is required. Applications that work correctly on VAX P.S.I. may be used with VAX P.S.I. Access, and vice versa, if the application is not sensitive to the differences in timing or throughput involved in the transfer. ▲ Refer to Software Product Description 27.78.00 for more information about VAX P.S.I. Access for DECnet Phase IV systems and to Software Product Description 29.03.00 for more information about VAX P.S.I. Access for ADVANTAGE-NETWORKS systems.

VAX P.S.I. Multihost Mode of Operation

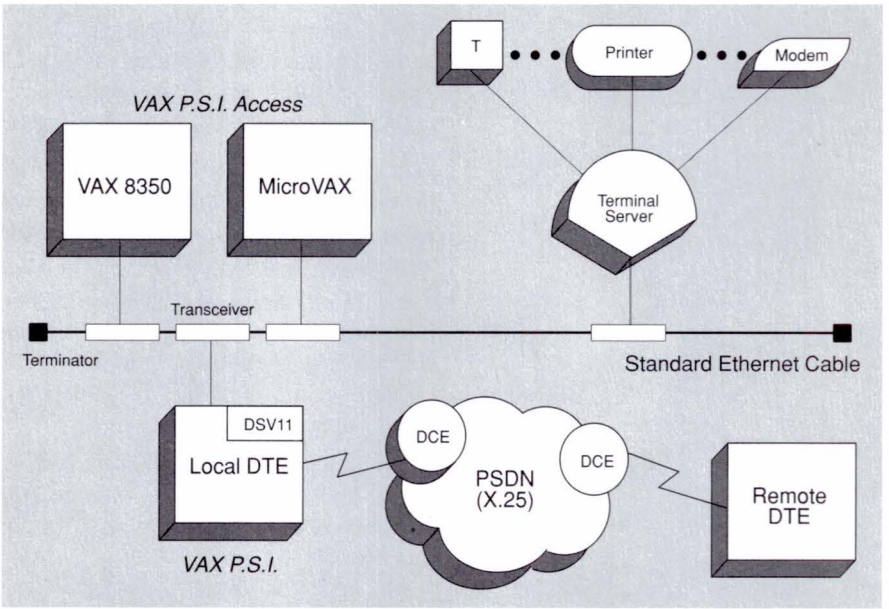

TBG-079-00

Features (VAX P.S.I. and VAX P.S.I. Access)

- Support for multiple networks — A VAX P.S.I. node (native or multihost mode) may be connected to more than one network. This is useful for connection to both a public and private network, or (in those countries where applicable) to several public ones.
- Support for DCE mode of operation — The VAX P.S.I. product may be used to configure individual lines as either a DTE or DCE. Two VAX P.S.I. nodes may be connected back-to-back, with one as a DTE and the other as a DCE. Point-to-point configurations are valid only where both ends fully conform to ISO standards 7776/8208.
- Support for CCITT 1984 networks — VAX P.S.I. has the capability to connect to networks conforming to the CCITT 1984 revision of the X.25 Recommendations.
- Coresidency of P.S.I. and P.S.I. Access — Both VAX P.S.I. and VAX P.S.I. Access can be installed in the same node, granting local users/processes the ability to access a network or networks connected to another X.25 connector node.

- Process-to-process communication — VAX P.S.I. and VAX P.S.I. Access allow application programs to access the packet level of the protocol as defined by the X.25 Recommendation. This interface enables an application program using VMS System Services to communicate with complementary software on other systems (Digital or multivendor DTEs) accessible via the X.25 connection.
- Terminal communications — VAX P.S.I. and VAX P.S.I. Access support terminal communications according to CCITT Recommendations X.3, X.28, and X.29. Remote terminals may access the VAX, and local terminals on the VAX may access remote CPUs.
- P.S.I.mail — Users of the VMSmail utility may exchange electronic mail directly between VAX P.S.I. (or VAX P.S.I. Access) nodes over a PSDN, without the need for a DECnet circuit connection between the nodes.
- Virtual circuits — VAX P.S.I. and VAX P.S.I. Access offer communication over both Permanent and Switched Virtual Circuits (PVC and SVC).
- Conformance — VAX P.S.I. complies with CCITT Recommendation X.25 (1978, 1980 or 1984) and/or with DIS7776 and ISO8208.
- Accounting — The accounting utility (PSIACCOUNTING) enables the system manager to obtain information on network usage. The Accounting utility can extract the information collected and display the information directly on a terminal or to a file.
- Network management — Network Control Program (NCP) or Network Control Language (NCL) are used to manage the VAX P.S.I. products and other Digital communications software. In addition, extensive event-logging and tracing capabilities are available. Trace data may be stored on a file, or displayed "live" on a local terminal.
- Communications — For the best performance, Digital recommends using a DMA device. ▲ Refer to Software Product Description 25.40.00 for a list of devices VAX P.S.I. supports, and for any restrictions in line speed or function.

Prerequisite Hardware and Software

DECnet-VAX for VAX P.S.I. multihost operation, VAX P.S.I. Access, or DECnet (DLM) communications across the PSDN. ▲ Refer to Software Product Description 25.40.00 for a description of prerequisite hardware and synchronous communications options.

Ordering Information

▲ Refer to the following sources for further information on supported processor and services for Phase IV and ADVANTAGE-NETWORKS versions of the P.S.I. products:

- Software Product Description 25.40.00, 29.03.00 (VAX P.S.I.), 27.78.00, 29.03.00 (VAX P.S.I. Access)
- Unique Product Identifier 071, D04 (VAX P.S.I.), 061, D04 (VAX P.S.I. Access)

X.25 Packet Switching Support for ULTRIX

DEC X.25 Gateway Client and DEC X.25 Native Mode for ULTRIX allow Digital's ULTRIX systems to connect to public and private X.25 Packet Switching Data Networks (PSDNs). Both Gateway Client and Native Mode enables communications between a VAX/DEC-RISC system and remote Data Terminal Equipment (DTEs) in the PSDN. Such PSDNs must conform to CCITT Recommendation X.25 and corresponding international (ISO) standards.

Using DEC X.25 Native Mode and the prerequisite synchronous communications hardware and device drivers, an ULTRIX system can be connected directly to CCITT X.25 Data Circuit Terminating Equipment (DCE). The product also allows direct connection to equipment acting as DCE using the ISO 7776/8208 protocols. The term DCE refers to ISO point-to-point communications only. X.25 Native Mode does not provide any packet-switching exchange facilities.

The DEC X.25 Gateway Client software is licensed as a component of ADVANTAGE-NETWORKS which is a prerequisite for its use. Gateway Client allows a DECnet-ULTRIX system on a LAN access to PSDNs offered by Digital X.25 connector nodes such as the DEC X25gateway 100/500 or DEC X25router 2000.

DEC X.25 Native Mode or DEC X.25 Gateway Client for ULTRIX support:

- Process-to-process (X.25) communication
- Remote terminal-to-process (X.29) communication
- DECnet/OSI communication in OSI-conformant WANs
- Communications with other Internet End Systems over X.25

The products enable transmission of Internet Protocol (IP) datagrams over X.25 switched virtual circuits to remote DTEs with comparable support. This means that standard TCP/IP protocol applications such as ftp, smtp, rlogin, Telnet, or those using the Internet domain socket interface, can communicate with systems such as UNIX or ULTRIX over an X.25 PSDN.

Note that both DEC X.25 Native Mode and Gateway Client provide the ability to collect accounting information on the usage of the product, as well as a security utility to control remote access to the ULTRIX system from the PSDN.

Features

- Supports both TCP/IP and DECnet/OSI communications providing customer vendor-independence and open networking.
- X.25 and X.29 communications — locates remote terminals anywhere there is dial-up access to a network PAD, giving users access to the system for the cost of a local call.
- ISO 8208 point-to-point support for high-speed connections with no PSDN charges for locally attached systems.
- Security and accounting that prevents unauthorized calls and allows logging of all call records.
- EMA Network Management (ADVANTAGE-NETWORKS) that integrates network management with industry-leading EMA products.

Ordering Information

The DEC X.25 Gateway Client license is included in the DECnet-ULTRIX license V5.0 or later.

X.25 Packet Switching Support for ULTRIX Order Codes		
Option	**Order Code**	
X.25 Native Mode	**RISC**	**VAX**
Software license	QL-YSYA*-**	QL-YSZA*-**
Software media	QA-YSYA*-H*	QA-YSZA*-H*
Software documentation	QL-YSYAA-GZ	QL-YSZAA-GZ
Software services	QT-YSYA*-**	QT-YSZA*-**
X.25 Gateway Client		
Software media	QA-YTAA*-H*	QA-YTBA*-H*
Software documentation	QL-YTAAA-GZ	QL-YTBAA-GZ
Software services	QT-YTAA*-**	QT-YTBA*-**
= media type, H = 5 for TK50, M for magtape		

▲ Refer to the following sources for further information on supported processors and services:

- Software Product Descriptions 32.34.00 and 32.35.00
- Unique Product Identifiers YSY (RISC, Native Mode), YSZ (VAX, Native Mode), YTA (RISC, Gateway Client), and YTB (VAX, Gateway Client)

DEC X.25 Access for ULTRIX

DEC X.25 Access for ULTRIX software enables ULTRIX systems to communicate with systems from other vendors over an X.25 network through the use of TCP/IP. Moreover, multivendor TCP/IP-based systems on the LAN can use the X.25 connectivity offered by this software. The X.25 Access software installed on an ULTRIX system (VAX or RISC) in a DECnet Phase IV network allows transparent access via an X.25 connector node. This could be a DEC X25router 2000 or 100, or any VAX system running VAX P.S.I. multihost.

The X.25 Access for ULTRIX V2.0 software is available on a worldwide basis. DEC X25router packages are available in only the United States and Europe and include all necessary hardware and software licenses to provide X.25 connectivity.

Features

- Transparent access to remote TCP/IP systems over the X.25 network bypasses the need for an intermediate DECnet system node for X.25 connectivity. Any TCP/IP-based system can also use the IP-X.25 gateway functionality.
- Use of the Standard Internet Protocol over X.25 (RFC 877) allows connection to any remote TCP/IP system that conforms to that standard.
- Standard socket interface above TCP/IP allows program-to-program communication over X.25 PSDNs.
- X.25 routing capability allows simultaneous DECnet and TCP/IP routing over X.25.

- X.25 programming interface to allow development of customer-written applications over X.25, and also the implementation of SNA and OSI Upper Layer protocols over the X.25 WAN.
- X.29 capability — for connection of terminals to hosts over X.25, including host-based PAD, incoming and outgoing calls.

Prerequisite Hardware

- Any VAX or MicroVAX system, as specified in Software Product Description 28.86.00 (DEC X25router 2000) or the DEC X25router 100
- An X.25 connector, such as the DEC X25router 100, or any VAX running VAX P.S.I multihost

Prerequisite Software

- ULTRIX-32 operating system, ULTRIX V4.0–V4.1/UWS V4.0–V4.1
- DECnet-ULTRIX V4.0 (included in the DEC X.25 Access for ULTRIX media kit)
- DEC X25router 2000, V1.1 (ULTRIX, SPD 28.86.01), or VAX P.S.I., V4.2 (SPD 25.40.14), depending on the connector node

DEC X.25 Access for ULTRIX

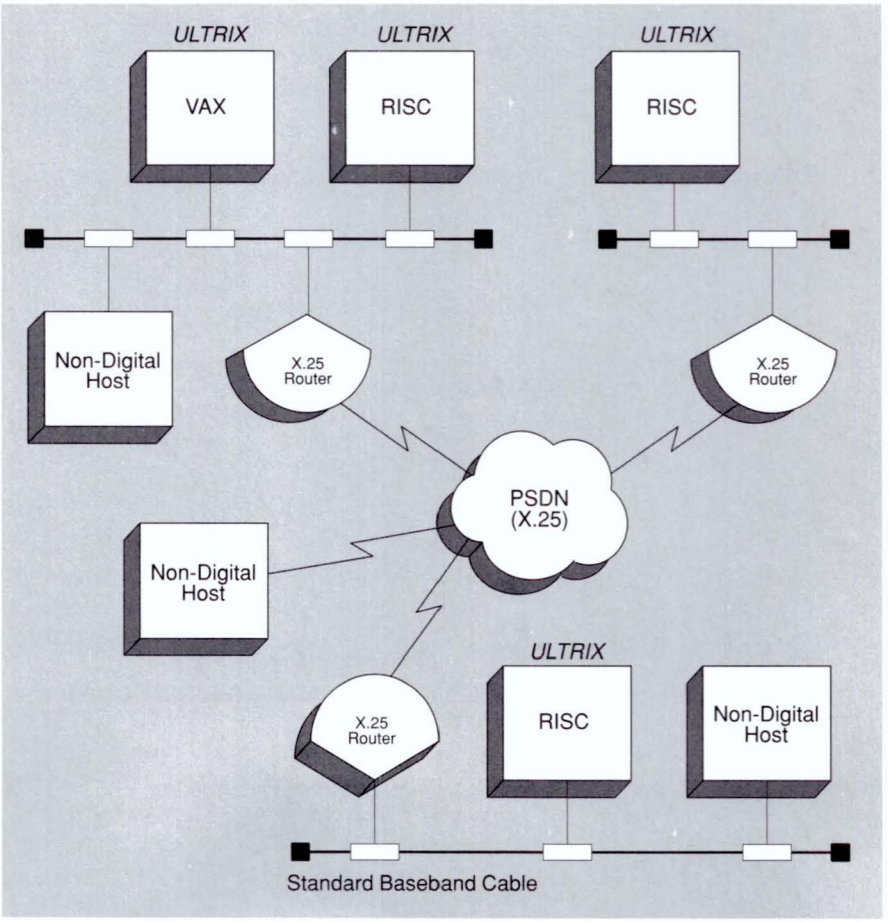

TBG-054-00

Ordering Information

▲ Refer to Software Product Description 26.E6.00 for software ordering information. This software is available for VAX ULTRIX systems (UPI YP3) and RISC ULTRIX systems (UPI GTE).

Packages

The following DEC X25router packages are available in the United States and Europe only. They include DEC X25router hardware, license, ULTRIX media and documentation kit, and one DEC X.25 Access for ULTRIX license. X.25 Access software must be ordered separately.

DEC X25router Order Codes

Option	Order Code
DEC X25router 100 packages	DEMSB-F*
DEC X25router 2000 packages	DEMSA-F*

* Replace the * with one of the following codes: A (United States), D (Denmark), E (United Kingdom and Ireland), I (Italy), K (Switzerland), T (Israel) or X (Austria, Belgium, France, Germany, Netherlands, Norway, Sweden, Portugal, Spain)

Open Systems Interconnection (OSI) refers to a set of international standards produced by the International Organization for Standardization (ISO). These standards allow computer systems made by various manufacturers to communicate with each other using internationally accepted protocols. Users are thus enabled to communicate in an open networking environment.

The OSI standards are based on an architectural OSI Reference Model that defines a layered protocol structure for systems communications. The OSI Reference Model has seven layers with well-defined functions. Each layer builds upon the functionality offered by lower layers. The Digital Network Architecture (DNA) is based on the OSI Reference Model, and ADVANTAGE-NETWORKS incorporates the full seven layer stack, along with DECnet and TCP/IP

DECnet-VAX Extensions, DECnet/OSI for ULTRIX, and DECnet/C for VMS provide the OSI Network, Transport, Session, Presentation, and Application layers. VAX P.S.I. and 802.3/Ethernet products provide services at the Physical, Data Link, and Network layers of the OSI model. VAX DEC/MAP provides network services for the manufacturing environment at the Network, Transport, Session, and Application layers. Digital's X.400 products, combined with Digital's other MAILbus products, provides mail, messaging, and document interchange services at the Application layer.

▲ For further information on MAILbus, refer to Section 7.

OSI and Government Open System Interconnection Profile (GOSIP)

Digital's Open Systems Interconnection (OSI) networking and communications products are designed to comply with international OSI standards. Since the individual OSI standards contain options, OSI workshops have been developed to assist implementors to agree on both the standards and the options in the standards they will implement for a given product. Without these prior agreements, the interoperation of OSI products may be suboptimum.

Certain Implementors Agreements have been grouped together to set standards for government procurement (for example, the United States and the United Kingdom). These groupings are called Government Open Systems Interconnection Profiles (GOSIPs). In Europe the individual agreements are also called European Standardized Profiles. The effort worldwide to limit the number of agreements or profiles by harmonizing the work of the several workshops is in progress. The international implementation agreements are termed International Standardized Profiles.

A further set of activities involving testing is also in place. Objective conformance testing is necessary to ascertain that a vendor's OSI implementation does what it promises to do. When followed by interoperability testing between products (one or several vendors), the user has the greatest possible confidence in OSI products.

Digital, as part of its commitment to OSI, and therefore to GOSIP, is actively involved in the OSI standards process at all levels. These levels of activity are outlined in the following illustration.

OSI-to-GOSIP Standards Process

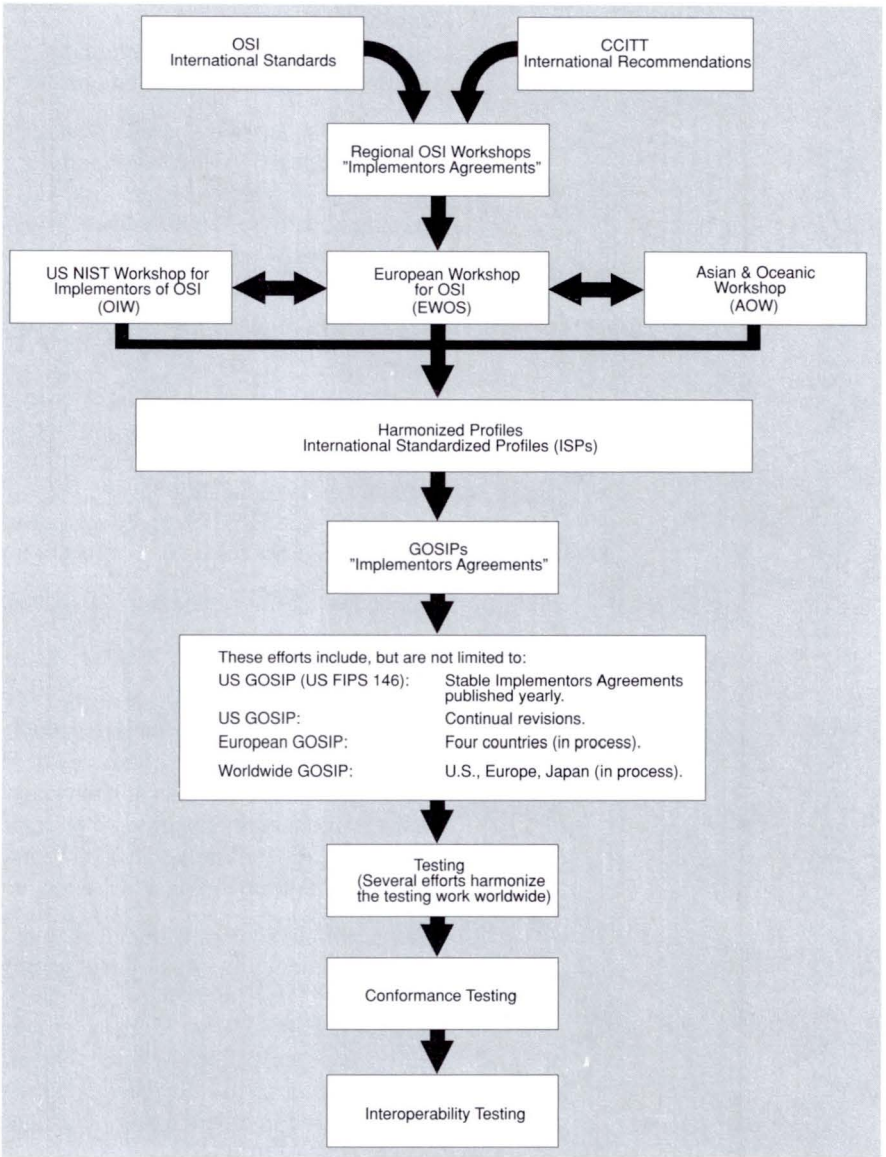

TBG-080-00

OSI Qualifications

- International — ISO is made up of member organizations representative of standardization in their specific country, (for example, ANSI in the United States, BSI in the United Kingdom, and AFNOR in France). The ISO/IEC Joint Technical Subcommittee 1 (JTC1) has responsibility for information processing systems. International Telegraphy and Telephony Consultative Committee (CCITT) is part of a U.N. Treaty Organization and comprises member nations. The representative is usually a government agency (many PTTs, like the German Bundespost, are government or quasi-government agencies). The United States representative is the State Department. A class of membership exists for computer vendors "Scientific and Industrial Organizations." Digital Equipment Corporation has this type of membership.

- Regional OSI workshops — These workshops comprise computer vendors such as Digital and government agencies. They issue the updated Stable Implementors Agreements, for example, or latest OSI enhancements. In the United States, the updates have been yearly.
- GOSIP — Governments, such as the United States and the United Kingdom, issue the updated Government Open Systems Interconnection Profiles (GOSIPs). In the United States, updates have been yearly. In the United States, the Advance Requirements Group, which consists of United States Government Agencies, relies on the Stable Implementors Agreements as the source of information. They produce the final yearly updated procurement standards; in the United States it is called FIPS 146.
- Testing — Digital is actively involved with conformance and interoperability OSI product testing both internally and with recognized test organizations worldwide.

DECnet-VAX V5.4 Extensions, DECnet-OSI for ULTRIX, and DECnet/OSI for VMS were designed to be conformant to U.S. GOSIP V1 and U.K. GOSIP V4. Check with your local Digital sales representative for the most recent conformance statements.

OSI Application Developer's Toolkit

The OSI Application Developer's toolkit permits the application writers to use the services of the OSI upper layers to write distributed applications that communicatew over open networks. The toolkit supports application development on both VMS and ULTRIX hosts which can use the OSI services provided by DECnet-VAX (with the DECnet-VAX Extensions options), DECnet/OSI for ULTRIX, or DECnet/OSI for VMS.

The toolkit provides an application development environment that consists of:

- An interface to File Transfer, Access, and Management (FTAM)
- Interfaces to the ACSE and Presentation layers (VMS only)
- An Abstract Syntax Notation One (ASN.1) compiler (VMS and ULTRIX)

The toolkit's OSI Application Programming Interfaces (APIs) add to the communication interfaces available under the Digital Network Application Support (NAS) environment.

The APIs provided on VMS and ULTRIX are identical. Support for further OSI APIs will be added to the toolkit as services are added to DECnet/OSI for VMS and ULTRIX.

Features

- OSI APIs provide access to the OSI Upper Layer services giving application programs multivendor interworking and operating system independence.
- OSI APIs provide application program vendors protocol independence; thus applications can be ported between multivendor systems.
- OSI Upper Layer services can run over any supported transport layer making application programs independent of network lower layers, allowing them to take advantage of different transports supported by the network.

Prerequisite Hardware

Any VAX or RISC computer

Prerequisite Software

DECnet-VAX Extensions or DECnet/OSI for ULTRIX

Ordering Information

OSI Application Developer's Toolkit Order Codes	
Option	**Order Code**
OSI Application Developer's Toolkit for VMS	
License	QL-GZRA*-AA
Kit	QA-GZRAA-H#
OSI Application Developer's Toolkit for ULTRIX	
VAX license	QL-GZSA*-AA
VAX kit	QA-GZSAA-H#
RISC license	QL-GZTA*-AA
RISC kit	QA-GZTAA-H#
*Processor code	
#5 = TK50, M = magtape	

▲ Refer to the following sources for further information on supported processors and services:

- Software Product Description 34.98.00
- Unique Product Identifier GZR, GZS, GZT

VAX DEC/MAP

VAX DEC/MAP is a multivendor, broadband, plant-floor device interconnect for the manufacturing environment, which adheres to the Manufacturing Automation Protocol (MAP) specification V3.0. The MAP V3.0 specification is based on the 7-layer, International Standards Organization/Open Systems Interconnection (ISO/OSI) Network Reference Model.

This product comprises both software and hardware. The software supports both IEEE 802.3 and IEEE 802.4. IEEE 802.4 is supported only on Q-bus (DTQNA) platforms. The DTQNA has a frequency-agile modem with an internal or external (NEMA 12 enclosure) modem option.

The MAP network architecture specifies the protocols and services for the Physical, Data Link, Network, Transport, Session, Presentation and Application Layers — Layers 1–7, respectively. The software (VAX DEC/MAP V3) implements the Network Layer to the Application Layer (Layers 3–7), the Physical through the Data Link Layers (Layers 1–2) are implemented in hardware.

The VAX DEC/MAP software provides a user interface to the communication services that consist of File Transfer, Access, and Management (FTAM), Association Control Service Elements (ACSE), Network Management and Directory User Agent.

VAX DEC/MAP Network Management includes the MAP Control Language (MAPCL). MAPCL enables a network manager to read and modify local parameters, isolate faults through event logging and loopback testing, perform system verification, and maintain the local directory cache. MAPCL commands are similar to DECnet NCP commands. Also included is the Directory User Agent (DUA) which provides name-to-address resolution.

Required Components

VAX DEC/MAP software is a layered product, supported on the VMS operating system. This product requires 9,200 blocks of system disk space for installation and 6,000 blocks of system disk space for permanent use. It also offers the software and hardware as separately ordered parts and pricing, but both software and hardware have prerequisite components. ▲ Consult your local sales representative for more details.

Ordering Information

▲ Use the software order code template in this section when building an order code number from the software Unique Product Identifier (UPI). Refer to the Software Product Description (SPD), or consult your local sales representative to determine whether the software application ordered is supported by the processor for which it is intended.

- Software Product Description 27.66.00
- Unique Product Identifier VFZ

DEComni/VMS V1.1, OSI Manufacturing Network Interconnect

DEComni/VMS V1.1, OSI Manufacturing Network Interconnect, is the Digital implementation of the Manufacturing Message Specification (MMS), an international standard communications protocol, ISO 9506-1 and ISO 9506-2. MMS is a component of the Application layer of the ISO/OSI 7-Layer Reference Model.

This implementation consists of a library of callable routines and run-time services that allow host applications to talk to applications running on manufacturing devices — robot controllers, programmable logic controllers, controllers for Numerically Controlled (NC) machine tools, and distributed process control systems.

DEComni/VMS V1.1 includes utility programs for creating and managing stored definitions of application data structures. A complete set of documentation for programming with DEComni and installing and managing the software is part of the product.

Version 1.1 of this product is designed for use by VMS for VAX host applications that control device operations and/or request data from devices.

Features

- DEComni/VMS V1.1 conforms to Implementation Class MAP3 as defined in Chapter 10, Section 4 of the Manufacturing Automation Protocol Specification, V3.0, August 1, 1988. DEComni/VMS additionally supplies 11 services above those specified in Implementation Class MAP3. All services, client and/or server, and parameter Conformance Building Blocks are equal to, or a superset of, those provided by plant-floor device vendors.
- Supports the X Window protocol, DECwindows.
- The product may interoperate with those plant floor device vendors that have implemented to ISO IS9506(MMS).
- Provides a high-level Applications Programming Interface (API) with a high degree of built-in functionality.
- Provides a low-level programming interface that conforms to the MAP Application Interface Specification (MMSI).
- Provides for future implementation of the MMS companion standards.
- Provides the API to DECosap/VMS product.

Prerequisite Software

- VMS operating system V5.4 or later
- Rdb/VMS V4.0 run-time option
- VAX DEC/MAP V3.0, which supports either an IEEE 802.3 (Ethernet) or an IEEE 802.4 (Token-bus) physical connection

Ordering Information

▲ Refer to the following source for further information on supported processors and services:

- Software Product Description 32.32 (V1.0)
- Software Product Description 32.32.01 (V1.1)
- Unique Product Identifier YME

DECosap/VMS V1.0

Digital Omni Services for SINEC-AP (DECosap/VMS) is the Digital implementation of SINEC Automation Protocol (SINEC-AP), the Siemens communications protocol for plant automation over 802.3/Ethernet LANs. SINEC-AP is the application-to-application protocol developed by Siemens on top of the OSI transport layer. It specifies Siemens' proprietary Session, Presentation and Application Layers in the OSI reference model. Siemens has defined and developed SINEC-AP as the common communication method in the plant, enabling transparent access to the network from a wide range of Siemens' manufacturing devices (programmable logic controllers, numeric controllers, robot controllers) using specific Siemens Communication Processors (CPs).

The set of services provided by SINEC-AP — called Technological Functions — adhere to the functions specified by the Open Systems Interconnection (OSI) Manufacturing Message Specification (MMS, ISO 9506-1) developed by the International Standard Organization (ISO). For this reason, DECosap/VMS adopts DEComni/VMS, Digital's implementation of MMS, as the Application Programming Interface (API). In addition, DECosap/VMS extends the services provided by DEComni/VMS to support those SINEC-AP Technological Functions that are non-MMS compliant. DECosap/VMS also includes utility programs that, in conjunction with the DEComni/VMS programming and runtime environments, provides support to create and manage stored definitions of application data types.

A set of documentation for programming with DEComni and installing and managing the software is part of the product.

Features

- DECosap/VMS V1.0 has been developed in cooperation with Siemens Automation Division to provide a reliable, robust, long-term product.
- Tested in cooperation with Siemens for interoperability with a wide range of Siemens' Communication Processors.
- The transport implementation is shipped as VAX OSI Transport Service (VOTS).
- Provides for transparent migration of plant floor device applications to the full OSI implementation.
- Can coexist with X.400 and FTAM products on the same VAX host.

Prerequisite Software

- VMS operating system
- DEComni/VMS V1.0 (**Note:** Needed to use DEComni only with DECosap; DEC/MAP is not a prerequisite of DEComni.)

Ordering Information

Refer to the following sources for further information on supported processors and services:

- Software Product Description 32.75.00
- Unique Product Identifier YLN

VAX Public Access Communications (VAXPAC)

VAX Public Access Communications (VAXPAC) lets VMS or MicroVMS users connect to a remote system using asynchronous lines. VAXPAC allows users to access database services that provide information such as investment reports, credit verification, or international news.

The remote system may be any system that accepts and displays data using an asynchronous interface compatible with EIA-232-D, EIA-422, or EIA-423-A.

VAXPAC users can operate as if the terminal were directly connected to the remote system, can capture data from the remote system in a file for later printing or editing, or transfer a file (with error checking) to or from a system with cooperating software.

Features

- Provides access to all facilities through menu selections and extensive online help.
- Includes KERMIT error-correction file-transfer software; provides an interface that allows other file-transfer software to be invoked instead of KERMIT.
- Offers predefined connections that can be specified for either general use or designated individuals.
- Supports direct or telephone connections with autodial, dial-from-keyboard, or dial-from-handset for applicable modems.
- Includes maintenance facilities that let users customize VAXPAC operation.

Prerequisite Hardware

One of the following:

- Any valid MicroVAX II with 3 MB internal memory, TK50 or dual-RX50 drive, one DZQ11 or DHQ11, one RD52, and a VT100/VT200-series terminal, or any MicroVAX 2000 or VAXstation 2000, plus one or more modems if using telephone connections: DF224 (Scholar), DF03-compatible, or Hayes "AT" Instruction Set-compatible.
- Any valid MicroVAX 3500/3600 system with 3-MB memory, TK70, one RA70, CXY08 or DFA01, and VT100/VT200-series terminal.

Prerequisite Software

One of the following:

- All components of MicroVMS V4.4 or later
- VMS operating system V4.4 or later

Ordering Information

▲ Refer to the following for further information on supported processor and services:

- Software Product Description 28.51.00
- Unique Product Identifier ZB1

VTERM II, poly-COM 220, and poly-COM 240 for the IBM PC/XT/AT

This product set is not currently available in Europe.

The Digital Distributed Software Program offers three products that run on the IBM PC/XT/AT to emulate Digital terminals. These products perform ASCII and binary file transfers between an IBM PC and a Digital host system. VTERM II allows the PC/XT/AT to emulate a VT100 terminal, poly-COM 220 allows the PC/XT/AT to emulate a VT102 and VT220 terminal, and poly-COM 240 allows the PC/XT/AT to emulate a VT240 terminal.

VTERM II

VTERM II is an asynchronous communication package for the IBM PC developed by Coefficient Systems Corporation. VTERM II allows direct connection to a host computer at speeds up to 9.6 Kb/s. With a Digital mini- or mainframe-computer, users can run full screen, keypad-oriented software such as EDT, TECT, WORD11, and EMACS, transferring text and binary files between the PC and the host.

Features

- Compatible with a VT100.
- Full VT100 keyboard and video emulation.
- 20 user-definable keys.
- Full VT100 escape-sequence recognition.
- Status display line on screen.
- 80-character column display — 132-character display with adapter board available from Coefficient Systems Corporation.
- DOS-VTERM toggle key allows switching between the DOS-screen and the host-screen without losing the communications link.
- SETUP MODE key.
- Printer support for VT1XX-AC and VT102 ports using any IBM PC-compatible printer.

poly-COM 220 and 240

poly-COM 220 is the successor to poly-COM and allows the use of an IBM PC/XT/AT computer to emulate any one of the Digital VT102 and VT220 terminals for file transfer. The program supports all Digital full-screen editors, including EDT, and all programs that use advanced terminal features such as Digital's ALL-IN-1. poly-COM 220 provides an instant horizontal shift key that allows the user to view and work on text up to 132 columns wide. poly-COM 240 adds Digital VT240 emulation to poly-COM 220 and provides full Digital color graphics terminal emulation.

poly-COM 220 Features

- Compatible with VT100-series and VT220.
- Full VT100- and VT200-keyboard and video emulation.
- 8-bit international character support with compose key.
- 21 user-definable soft function keys.
- VT100 escape sequence recognition and VT220 8-bit terminal control.

- Status display line on screen.
- Instantaneous horizontal shift for 132-character display.
- DOS-VTERM toggle key allows switching between the DOS screen and the host screen without losing the communication link.
- SETUP MODE key.
- Printer support for VT1xx-AC and VT102 ports using any IBM PC-compatible printer.
- Host control functions allows the host to control the IBM PC through poly-COM 220.
- Screen Save function blanks the PC screen after an inactive time period that is user-definable.

poly-COM 240 Features

- Compatible with VT100-series and VT220.
- Full VT100- and VT220-keyboard and video emulation.
- 8-bit international character support with compose key.
- 21 user-definable soft function keys.
- VT100 escape sequence recognition and VT200 8-bit terminal control.
- Status display line on screen.
- Instantaneous horizontal shift for 132-character display.
- SETUP MODE key.
- Printer support for VT1XX-AC and VT102 ports using any IBM PC-compatible printer.
- VT240- and VT125-device ID.
- ReGIS graphics are supported.
- Full support for IBM PC and Epson graphics printers.

Prerequisite Hardware

For the Digital host, the same hardware used for asynchronous terminal ports accommodates the IBM PC.

For the PC, a serial communications port is required for direct cable connection to the Digital host or to a modem.

Ordering Information

▲ Consult your local sales representative for specific software configurations.

WPS-PLUS/PC

WPS-PLUS/PC is a document-processing software system that provides Gold Key-style word processing for users of IBM PCs and IBM PC/XTs running IBM PC-DOS V2.10, V3.0, or V3.10. ▲ Refer to Software Product Description 30.75 for more information.

Features

WPS-PLUS/PC allows PC-DOS users to:

- Create, edit, and print documents, as well as retrieve documents by document name, number, or keyword.
- Produce form letters and maintain mailing lists.
- Convert a WPS-PLUS document to and from a DX file format and ASCII file format.
- Communicate through user-developed scripts.
- Create and modify printer attribute and character print tables.
- Transfer documents with Digital hosts running WPS-PLUS/VMS or WPS-PLUS/ALL-IN-1.
- Include technical characters and scientific equations in a document.
- Run WPS-PLUS/VMS on the VAX in VT100 emulation mode, which also supports the Digital Multinational and Technical Character Sets.
- Include diagrams, matrices and VT100 character set equations, and composite and multinational characters in a document.
- Transfer documents between the IBM PC and IBM PC/XT and any Digital host running the poly-XFR for PC-DOS/IBM Personal Computers Communications package, where the host does not have WPS-PLUS/VMS or WPS-PLUS/ALL-IN-1.

Prerequisite Hardware

Any valid IBM PC or IBM PC/XT personal computer configuration with at least 384 KB of memory.

- A minimum of two 5.25-inch, 362-Kb floppy drives, or one 5.25-inch, 362-Kb floppy drive and a hard disk.
- IBM PC/XT keyboard.

Prerequisite Software

PC-DOS operating system, V2.10, V3.0, or V3.10

Ordering Information

▲ Consult your local sales representative for specific software configurations. The following table lists specific Unique Product Identifiers.

WPS-PLUS/PC Unique Product Identifiers (UPI)	
Option	**UPI**
Single-use license, binaries, documentation, warranty	
Quantities (1-9)	A72
Quantities (10-24)	A73
Quantities (25-99)	A74
Quantities (100 plus)	A75
Installation service	A72
Basic service	A72
Single product update service	A72

Software Development Tools

Digital's Software Development Tools facilitate the development of layered telecommunications protocols for Digital's family of Direct Memory Access (DMA) intelligent communications processors.

The development tools are especially useful to OEMs and end users who write their own communications packages. Well-defined programming standards and methodology help reduce project development costs.

Digital-supplied firmware routines build an executive that acts as the communication processor's operating system. With the development tools, system programmers can easily implement private protocols for custom networking applications.

Digital offers Software Development Tools for the following intelligent communications processors:

- KMV1A-M Direct Memory Access Intelligent Communications Processor
- KCT32 Direct Memory Access Intelligent Communications Processor

Features

- Facilitates custom network applications.
- Extensive documentation.
- Reduced development costs.
- Linker and loader.
- Single-step, start, stop, and breakpoint program debugger.

Ordering Information

▲ Consult your local sales representative for specific software configurations. The following table lists Unique Product Identifiers.

Software Development Tools Unique Product Identifiers (UPI)	
Option	**UPI**
VMS	
KCT32 development tools*	128
RSX-11S, RSX-11M, RSX-11M-PLUS	
KMV1A-M development tools	S98
MicroVMS	
KMV1A-M development tools*	Z36
KMV1A-M MicroVMS driver	Z35
* VAX-11 RSX (Q*382) is required for VMS and MicroVMS development.	

HDLC Framing Software

Digital offers HDLC framing software for the KMS11-BD/BE and the KMV1A-M. These software packages provide a basic HDLC frame; they do not provide the addressing and sequencing that must be supplied by the user for some applications. The framing software packages are particularly useful in multivendor environments and in applications requiring proprietary protocols. The KMS11-BD/BE framing software can also be configured for bisync (BSC) framing.

Ordering Information

▲ Consult your local sales representative for specific software configurations. The following table lists Unique Product Identifiers.

HDLC/BSC Framing Software Unique Product Identifiers (UPIs)	
Option	**UPI**
VMS	
KMS11-BD HDLC/BSC framing software	920
RSX-11S, RSX-11M	
KMV1A HDLC framing software	S32
RSX-11M-PLUS	
KMV1A-M HDLC framing software	S39

X.25 Link Level Software

Digital offers X.25 link level software for the KMS11-BD/BE, KMS1P-M, and KMV1A-M. These packages provide point-to-point communications between host processors, making them particularly useful in a multivendor environment. The packages operate in full-duplex mode, and implement the CCITT 1980 Recommendations for X.25 LAPB Link Level Protocol.

These packages are not required when the devices are used by Packetnet software, discussed elsewhere in this section.

Ordering Information

▲ Consult your local sales representative for specific software configurations. The following table lists Unique Product Identifiers.

X.25 Link Level Software Unique Product Identifiers (UPIs)

Option	UPI
VMS	
KMS11-BD/BE	757
MicroVMS	
KMV1A-M MicroVMS driver	Z35
KMV1A-M MicroVMS X.25 link level	Z37
RSX-11S, RSX-11M	
KMS11-BD/BE, KMS1P-M	757
KMV1A-M	S97
RSX-11M-PLUS	
KMS11-BD/BE, KMS1P-M	770
KMV1A-M	S97

VAX ISDN Software V1.1

The DEC ISDNcontroller 100 (DIV32), with its associated software (VAX ISDN software), provides Digital systems with Basic Rate Access to the ISDN. It is a single-board, synchronous communication controller, that can be fitted directly into a Q-bus MicroVAX system enclosure. Each module supports one ISDN Basic Rate Access line (two high-performance bearer channels and the signalling channel, 2B+D). The board has a 68000 microprocessor and 128 KB of on-board memory to downline load the Level 1 software.

There are two software versions: VAX ISDN software V1.1, and VAX ISDN Access software (optional). The VAX ISDN software runs on the Q-bus MicroVAX hosting the DEC ISDNcontroller 100. DECnet VAX and VAX P.S.I. layered network software, as well as customer-developed protocols (HDLC, SDLC, DDCMP oriented) are supported.

The VAX ISDN software controls the ISDN signalling channel (D), and therefore controls the establishment of the two bearer channel (B) connections over the ISDN to send and receive calls to and from separate destinations. As each channel is independently managed, two different protocols can be simultaneously run on both channels. The DIV32 driver is included in the VAX ISDN software distribution kit.

VAX ISDN software allows a Time Cutting Mode that disconnects/reconnects automatically from the network when no data is being transmitted. No connection means no charges.

Any DECnet node running ULTRIX, VMS, or MS-DOS has the ability to use the ISDN circuit once the connection has been established.

Public ISDN networks and switches currently supported include:

United Kingdom	British Telecom ISDN 2
France	Numeris — VN2 Network
Germany	Deutsche Bundespost — 1TR6 Network
Japan	INS-NET-V2
	Nippon T&T Corp.
Switzerland	Tested: SwissNet1 — 1TR6 Access
United States	AT&T 5ESS–5E4 Switches

Note: Version 1.1 enables you to take advantage of the semi-permanent mode of the ISDN German network.

Prerequisite Hardware

The following processors are supported:

- MicroVAX II 3300/3400/3500/3600/3800/3900
- VAXstation II 3200/3500/3620/3540
- VAXserver 3300/3400/3500/3600/3602/3800/3900
- VAX 4000 Model 300
- Distribution media — tape: 9-track/1,600 bpi magtape (PE), TK50 streaming tape

Prerequisite Software

- Host: VMS operating system V5.2–1
- VMS Tailoring optional software: VAX P.S.I. V4.3, DECnet VAX V5.2

VAX ISDN Software Order Codes

Option	Order Code
Software license	QL-VZ9A*-**
Software media	QA-VZ9A*-**
Software documentation	QA-VZ9AA-GZ
Software product services	QT-VZ9A*-**

Ordering Information

▲ Refer to the following for further information on supported processors and services:

- Software Product Description 31.23.01

VAX ISDN Access Software V1.1

VAX ISDN Access Software can be used by any (Q-bus or non-Q-bus) VMS DECnet node to enable remote management of connections to ISDN. It allows this node to manage one or more remote Q-bus nodes, providing they host the DEC ISDNcontroller 100 and VAX ISDN software. In doing so, the Q-bus VMS node operates as an ISDN Ethernet server.

VAX ISDN Access Software Order Codes

Option	Order Code
Software license	QL-VZCA*-**
Software media	QA-VZCA*-**
Software documentation	QA-VZCAA-GZ
Software product services	QT-VZCA*-**

Prerequisite Hardware

The following processors are supported:

- MicroVAX II 2000/3100/3300/3400/3500/3600/3800/3900
- VAXstation II 2000/3100/3200/3500/3520/3540/8000
- VAXserver 3100/3300/3400/3500/3600/3602/3800/3900/6000–210/6000–310/6000–410/6000–420/6210/6220/6310/6320
- VAX 4000 Model 300
- VAX 600 Model 200/Model 300/Model 400/8200/8250/8300/8350/8500/8530/8550/8600/8700/8800/8810/8820/8830/8840/8842/8974/8978
- Distribution media — disk: RX23, tape: 9-track/1,600 bpi magtape (PE), TK50 streaming tape

Ordering Information

▲ Refer to the following for further information on supported processors and services:

- Software Product Description 31.24.01

6 Network Personal Computing

This section contains the following topics:

Overview	6-1
PATHWORKS Client Software	6-4
PATHWORKS Server Software	6-17
PATHWORKS Packaged Servers	6-24
Personal Computer Mail Solutions	6-34
LAN-Based Applications	6-36
PC Networking Hardware	6-48

Network Personal Computing

Today, personal computers need to be networked to realize their fullest potential. Sharing files, data, and applications makes PCs more efficient and simplifies system management. Without sacrificing their own computing power, networked PCs become smarter and let users make better use of their existing resources.

The PATHWORKS family of network personal computing products creates an environment where multivendor PCs, diverse communications protocols, networks, and applications can work together smoothly and efficiently. The family includes networking software products and packaged server products. These products incorporate all the applications and systems-integration expertise users have come to associate with Digital. They let users access the basic network utilities that best meet their organization's business needs. And they let users take advantage of advanced applications support, management, and integration capabilities that add substantial value to those basic utilities.

PATHWORKS products offer much more than just file and print services provided by the typical PC LAN software. They give users a choice and provide the best integration of those choices.

Features

- A choice of client: Digital integrates the industry-standard PC environments — Windows, DOS, OS/2, and Macintosh — with different servers through its family of PATHWORKS PC networking software.

  Because PATHWORKS uses industry-standard interfaces such as NETBIOS, PC applications work in the PATHWORKS environment. Users can work in the PC environment of their choice using the applications they want.
- A choice of server: Digital offers a full range of scalable servers based on Intel, RISC, and VAX architectures and running the OS/2, UNIX, and VMS operating systems.

  Users can receive file, print, and applications services from a wide range of scalable servers that provide LAN and WAN functionality, as well as the functionality users need for production-mode applications.

  PC users can connect to single or multiple servers as needed, giving them the functionality they need from the appropriate server platform.
- A choice of network: PATHWORKS supports a broad range of networking technologies and network transports.
- Interoperability with other types of desktop users, such as terminal users and UNIX (NFS) and VMS workstation users, or PC users on other third-party LANS.
- Easier data access and exchange. Personal computer files stored on server systems anywhere on the network are directly accessible from any PC or terminal on the network. DOS, OS/2, and Macintosh clients can also share files on a peer-to-peer basis.
- Efficient distribution of programs, data, and services. PC applications and data can be stored on large systems and shared by many personal computer users. PATHWORKS products also provide communications services, electronic mail, text editors (for OS/2 and DOS systems), and terminal emulation.

- Better use of resources. Networked PCs allow users to share mass storage, printers, plotters, gateways, and other devices with other users on the network. Yet most processing occurs on the desktop, not on the host system. This means better service at a lower cost per user.
- Simplified, central management of personal computing. Resources can be allocated on a group rather than an individual basis. The system administrator can control access to the network, data, applications, and resources. Using management facilities for DECnet and TCP/IP, system administrators can also manage local and remote LANs. Administrators can also perform remote software installations and updates, and centralized file backups.
- Smoother, faster data flow. High-speed connections and distributed applications improve personal and departmental effectiveness.
- A clear, consistent growth path. Digital's networked PC products can solve users' computing needs of today and tomorrow. There's virtually no limit on expansion. Users can add clients, servers, and resources as needed — without disrupting users!

Integrated Personal Computing Network

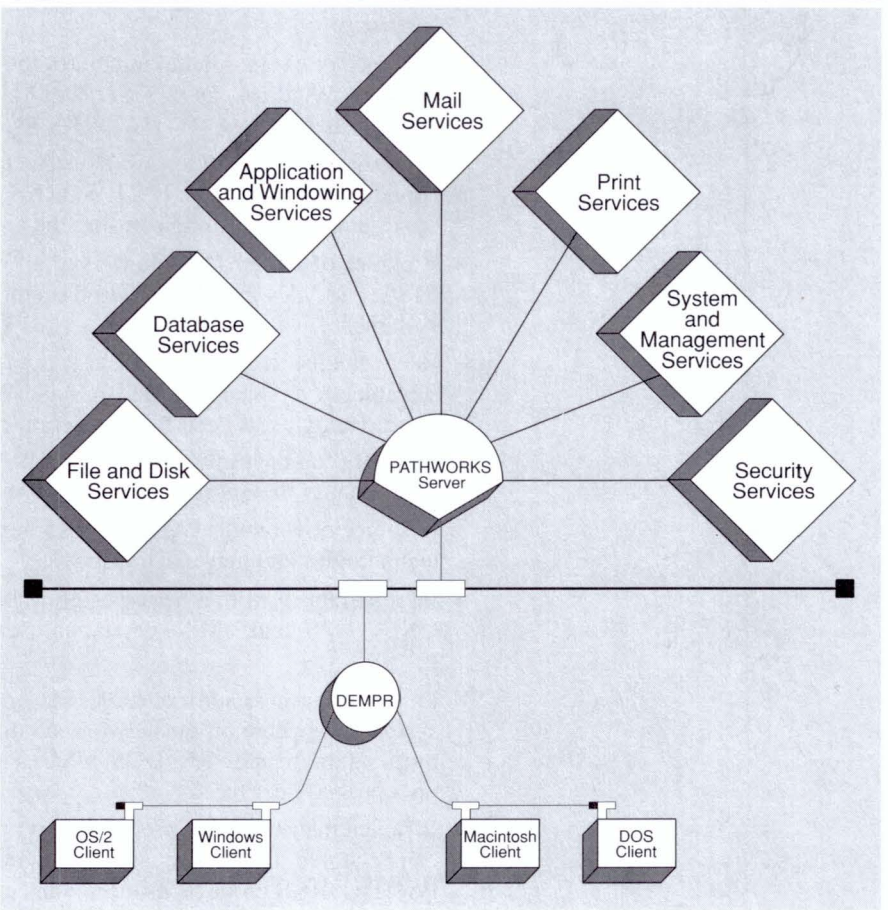

TBG-177-00

PATHWORKS adds value to the choice of basic PC network utilities through

- Its multivendor, enterprise-wide integration capabilities for applications, networks, electronic mail, and services. This enables customers to focus on future growth requirements as well as addressing current needs.
- Its peer-to-peer networking capabilities, users can access both local and remote resources — such as multiple servers, printers, gateways and corporate data — directly. The technologies used are transparent to the end user. And, the network is robust, providing up-time reliability for local and wide area access.
- Its multivendor management via system management, remote software installations and updates, and centralized file backups. In addition, PATHWORKS can take advantage of Digital's rich network management capabilities.

The Client-Server Relationship

A PATHWORKS client receives system software, PC applications, mass storage, and printer resources from PATHWORKS servers located anywhere on the network. Once the network link is established, the PC system software and applications run on the PC while accessing applications and files from virtual disks located on the server system. As far as the PC user is concerned, it's as simple as changing drives for DOS, Windows, and OS/2 users or switching volumes for Macintosh users. It doesn't matter where the server is located. The networking is totally transparent.

The following table shows the PATHWORKS servers and the clients each supports. These products are discussed on the following pages.

PATHWORKS Servers and Their Clients

Server	Transport	File Protocol	Client
PATHWORKS for VMS	DECnet	LAN Manager	PATHWORKS for DOS (Windows)
	TCP/IP		PATHWORKS for OS/2
PATHWORKS for VMS (Macintosh)*	DECnet		PATHWORKS for Macintosh*
	AppleTalk	AFP	
PATHWORKS for OS/2	DECnet	LAN Manager	PATHWORKS for DOS (Windows)
	TCP/IP		PATHWORKS for OS/2
	NetBEUI		
PATHWORKS for ULTRIX	DECnet	LAN Manager	PATHWORKS for DOS (Windows)
	TCP/IP		PATHWORKS for OS/2

* This software supports DECnet and AppleTalk communications and supports TCP/IP with MacX. The file and print services run over AppleTalk.

Note: Third-party products available for Macintosh systems support ULTRIX servers.

PATHWORKS client software enables personal computers to participate in the enterprise network. A user's favorite desktop computer can use file, print, and mail services provided by PATHWORKS server software running on OS/2, ULTRIX, or VMS platforms. And users don't have to learn anything new. The network services provided by PATHWORKS software are simply an extension of their familiar PC environment.

Each client PC must be licensed to access any PATHWORKS server anywhere on the network.

PATHWORKS for DOS and Windows

With PATHWORKS for DOS client software PC users can continue to use Microsoft Windows (V3.0 and V3.1) and the DOS command line when they connect into your organization's network. This client software gives you a broad choice of networks: it supports full LAN Manager V2.0 for access to file and print services and the APIs; DECnet and TCP/IP transports over Ethernet and 802.5/Token Ring networks; NETBIOS, both on the PC and on VMS servers, for task-to-task and multitask communication; and the Network Device Interface Specification (NDIS) for network interface cards.

PATHWORKS for DOS users can run Network Application Support (NAS) client-server applications such as the DECquery database application using SQL/Services, PATHWORKS Conferencing software for many-to-many communications, and DECtp Desktop for ACMS software for distributed transaction processing.

Features

- LAN Manager Redirector for access to file and print services on OS/2, ULTRIX, and VMS servers over local- and wide-area networks.
- A license for MAILworks for DOS, an X.400 mail client.
- A Mail client, including binary file attachments and realtime mail notification
- PC DECwindows Motif, an X Window System server.
- VT320 terminal emulation (character cell and windowed versions) that allows multiple sessions.
- NETBIOS programming interface support plus support for VMS NETBIOS for task-to-task and multitask communication.
- DOS utilities (backup and restore, loadable text and graphics fonts, and print screen capabilities).
- A remote boot facility for VMS servers.
- Support for Expanded Memory Specification V4.0.
- Support for InfoServer 100 and 150 CD-ROM drives.

Licensing

Each PATHWORKS client must have a PATHWORKS for DOS client license or a PATHWORKS for Windows client license.

For DOS and Windows users, the PATHWORKS for DOS license includes the right to use PATHWORKS for DOS client software on a single DOS personal computer and to use the PATHWORKS for VMS and PATHWORKS for ULTRIX server software on one or more server systems. This license also grants the right to use the MAILworks for DOS (X.400 mail client) and PATHWORKS for DOS (NetWare Coexistence) products. (The MAILworks for DOS client media and documentation kit must be purchased separately. A separate MAILworks server license and media and documentation kit are required to use the server-based mail software.)

For a DOS client to use TCP/IP networking, users must also purchase PATHWORKS for DOS (TCP/IP) client add-on license and software, described later in this section.

Also, for Microsoft Windows users, the PATHWORKS for Windows combination license contains both the PATHWORKS for DOS client license and the MAILworks for Windows (X.400 mail) license. (The MAILworks for Windows client media and documentation kit must be purchased separately.)

Ordering Information

PATHWORKS for DOS and Windows Order Codes	
Option	**Order Code**
PATHWORKS for DOS client license	QL-0TLA9-AA
PATHWORKS for Windows client license package: contains PATHWORKS for DOS license and MAILworks for Windows license.	QP-LBJAA-01
Media and Documentation for Network Use	
PATHWORKS for DOS and Windows media and documentation for VMS server (TK50)	QA-0TLAA-H5
PATHWORKS for DOS and Windows media and documentation for VMS server (magtape)	QA-0TLAA-HM
PATHWORKS for DOS and Windows media and documentation for ULTRIX server (TK50)	QA-0TLAE-H5
PATHWORKS for DOS and Windows media and documentation for ULTRIX server (magtape)	QA-0TLAE-HM

Media and Documentation for Local Hard Disk Use

Order one of these kits to use the PATHWORKS for DOS product with an OS/2 server, or if you want to load client software onto your hard disk.

Option	**Order Code**
PATHWORKS for DOS media and documentation (5.25-inch high density)	QA-0TLAA-H7
PATHWORKS for DOS media and documentation (3.5-inch low density)	QA-0TLAA-HB

Documentation Only

The media and documentation kits listed previously contain a complete documentation set. Order the documentation kits in the following table only if you want additional copies:

Option	Order Code
PATHWORKS for DOS complete documentation (VMS server)	QA-0TLAB-GZ
PATHWORKS for DOS complete documentation (ULTRIX server)	QA-OTLAE-GZ
PATHWORKS for DOS complete documentation (OS/2 server)	QA-0TLAC-GZ
PATHWORKS for DOS user documentation: *User's Handbook, MAIL User's Reference, SEDT User's Reference, Client Commands Reference, PC DECwindows Motif Guide, Microsoft Windows Support Guide, SETHOST Terminal Emulation Guide, Microsoft LAN Manager User's Guide for MS-DOS.*	QA-0TLAA-GZ
PATHWORKS for DOS DECnet-DOS documentation: *SETHOST Terminal Emulation Guide, DECnet User's Guide, DECnet Network Management Guide.*	QA-0TLAD-GZ
PATHWORKS for DOS User's Handbook	AA-PAF7C-TK
DECnet Programmer's Guide	AA-PAFJC-TK

PATHWORKS for DOS (TCP/IP)

PATHWORKS for DOS (TCP/IP) software option enables PATHWORKS for DOS clients to participate in TCP/IP network environments. Featuring an industry-standard RFC 1001/1002 NETBIOS implementation, PATHWORKS for DOS (TCP/IP) gives users access to industry-standard applications.

With this network transport option, PC users in TCP/IP networks can access the file and print services offered by PATHWORKS for VMS, ULTRIX, and OS/2 servers; use the mail services of PATHWORKS for ULTRIX and OS/2 servers; and run terminal emulators and PC DECwindows Motif in both Ethernet and Token Ring networks.

Features

- Telnet protocol for the PATHWORKS terminal emulators.
- File Transfer Protocol (FTP) to perform network file operations.
- Various TCP/IP network management tools such as PING, ARP, and NETSTAT.
- A Berkeley Software Distribution (BSD) V4.3 compatible socket library, allowing developers to create or port PC applications that use UNIX operating system socket library calls.
- The Domain Name Resolver, which allows applications to use domain names rather than Internet addresses.
- Memory-saving techniques.

Licensing

Each DOS client must be licensed to use the PATHWORKS for DOS (TCP/IP) product. The PATHWORKS for DOS (TCP/IP) license permits users to use the TCP/IP network transport on a single DOS personal computer.

Prerequisite Software

PATHWORKS for DOS client license, media, and documentation is a prerequisite for the TCP/IP license.

Ordering Information

PATHWORKS for DOS (TCP/IP) Order Codes

Option	Order Code
PATHWORKS for DOS (TCP/IP) client license	QL-YV9AW-AA
PATHWORKS for DOS (TCP/IP) media and documentation.	QA-YV9AA-HW
PATHWORKS for DOS (TCP/IP) User's Reference	QA-YV9AA-GZ
PATHWORKS for DOS (TCP/IP) Programmer's Reference Guide	AA-PESZA-TK

PATHWORKS for DOS (NetWare Coexistence)

PATHWORKS for DOS (NetWare Coexistence) lets PATHWORKS for DOS operate concurrently with Novell's NetWare client software (shell) on PCs running the DOS operating system and using a single Ethernet or a Token Ring network interface card. To use this product, a PC client platform must do the following:

- Meet the hardware, software, and network topology requirements of PATHWORKS for DOS client
- Satisfy the network topology requirements of a NetWare DOS client platform for NetWare V2.2, NetWare 386 V3.1, or NetWare for VMS V2.1
- Have an Ethernet or Token Ring card for which an NDIS-compliant driver is available. All of Digital's EtherWORKS cards meet this requirement.

The PATHWORKS for DOS (NetWare Coexistence) client kit includes

- NetWare driver components that can be used to generate an IPX driver that uses the NDIS interface
- An installation procedure that, together with the documentation, guides a system manager through the entire installation and configuration process
- Documentation describing how to install, configure, and use the PATHWORKS for DOS facilities while retaining access to NetWare capabilities

Licensing

The license for this product is included with a PATHWORKS for DOS license for V4.0 or later.

Prerequisite Software

For clients in a Token Ring LAN, PATHWORKS for DOS V4.1 is required. For clients in Ethernet networks, PATHWORKS for DOS V4.0 or 4.1 is required.

Ordering Information

PATHWORKS for DOS (NetWare Coexistence) Order Codes

Option	Order Code
PATHWORKS for DOS (NetWare Coexistence) media and documentation (5.25-inch low density, 3.5-inch low density)	QA-GLVAA-HW
PATHWORKS for DOS (NetWare Coexistence) documentation only (order only if you require extra documentation)	QA-GLVAA-GZ

PATHWORKS Access Solution for TCP/IP

PATHWORKS Access Solution (PAS) is a family of products that allow multivendor TCP/IP for VMS software to be used with PATHWORKS for VMS server software. These products also allow multivendor TCP/IP client software to use PATHWORKS servers. Developed by InterConnections, Inc. in cooperation with Digital, PAS provides compatibility between the PATHWORKS for VMS server and multivendor TCP/IP software.

PAS for TCP/IP supports the following transport software and TCP/IP clients:

VMS TCP/IP Transport	PC TCP/IP Client
TGV MultiNet	PATHWORKS for DOS (TCP/IP)
Wollongong WIN	3Com PC TCP/IP
Network Research Fusion	Ungermann-Bass PC TCP/IP
DEC TCP/IP Services for VMS	

PAS supports any combination of the previous client and server software and does not affect PATHWORKS DECnet support. To the PATHWORKS server, all the clients look the same. This means PATHWORKS for DOS, PATHWORKS for DOS (TCP/IP), 3Com, and Ungermann-Bass clients can all use the same server at the same time.

Prerequisite Software

PAS requires VMS V5.3 or higher and PATHWORKS for VMS V4.0 or higher installed and operational on the VMS server. In addition, users will need either Digital's DEC TCP/IP Services for VMS as the TCP/IP software for the VMS server or Network Research Fusion V3.4 or higher, Wollongong WIN VMS V5.1 or higher, TGV MultiNet V2.2 or higher, or DEC TCP/IP Services for VMS for use with 3Com or Ungermann-Bass clients. They will also need PATHWORKS for DOS and the PATHWORKS for DOS (TCP/IP) add-on.

On the client system, users will need either PATHWORKS for DOS and PATHWORKS for DOS (TCP/IP) add-on, 3Com TCP/IP client, or Ungermann-Bass TCP/IP client. There is no version dependency for the PC TCP/IP client.

Licensing

Each VMS server and PC client using PAS must be licensed.

Ordering Information

PAS Order Codes	
Option	**Order Code**
Media and Server License:	
PAS for Fusion (TK50): allows NetWork Research Fusion to be used as the VMS TCP/IP software with a PATHWORKS for VMS server.	QB-XY1AV-WA
PAS for MultiNet (TK50): allows TGV MultiNet to be used as the VMS TCP/IP software with a PATHWORKS for VMS server.	QB-XY2AV-WA
PAS for WIN/VMS (TK50): allows Wollongong WIN/VMS to be used as the VMS TCP/IP software with a PATHWORKS for VMS server.	QB-XY3AV-WA
PAS for UCX, 3Com and Ungermann-Bass (TK50): allows a VMS server using DEC TCP/IP Services for VMS as its TCP/IP software to work with 3Com and Ungermann-Bass clients.	QB-XY4AV-WA
Client License:	
PAS TCP/IP client license (five PC license pack)	Q6VXX-CZ

PATHWORKS for OS/2

PATHWORKS for OS/2 software lets an OS/2 system be a client to an OS/2 ULTRIX or VMS system running PATHWORKS server software. OS/2 clients can then use selected resources and services of those systems and access information and services from other PATHWORKS servers on the enterprise network.

PATHWORKS for OS/2 supports multiple concurrent transports: NetBEUI, DECnet and TCP/IP, in Ethernet and 802.5/Token Ring networks, and supports source routing bridges between Token Rings. It also supports the NETBIOS interface (on the PC and on VMS servers) for task-to-task and multitask communication; and the Network Device Interface Specification (NDIS) for network interface cards.

Features

PATHWORKS for OS/2 provides the following client capabilities to OS/2 users:

- Full LAN Manager V2.0, including LAN Manager Redirector for access to file and print services on OS/2, ULTRIX and VMS servers, over local- and wide-area networks.
- Mail utility, including binary file attachments and real-time mail notification.
- VT320 terminal emulation that allows multiple sessions to VMS and ULTRIX hosts.

Users of OS/2 Standard Edition V1.1, V1.21 and V1.3 are supported as clients. OS/2 Extended Edition V1.3 users can connect to all PATHWORKS servers via DECnet over Ethernet by using the LAN Requester; to PATHWORKS for OS/2 servers via NetBEUI over Token Ring; and to services of IBM hosts via the IBM Communications Manager as well.

Note: PATHWORKS for OS/2 software also provides server capabilities, which are described in the PATHWORKS Server section.

Licensing

One media and documentation kit provides both OS/2 client and OS/2 server capabilities. However, there are two separate licenses. Each OS/2 client requires a client license (QL-YFWAW-AA). Each OS/2 server requires a server license (QL-YLXAW-AA). An OS/2 client or server running TCP/IP requires a PATHWORKS for OS/2 (TCP/IP) license (QL-XV7AW-AA).

Prerequisite Hardware

PATHWORKS for OS/2 requires an 80286, 80386, or 80486 processor with 4 MB of system memory for client configurations and 6 MB of system memory for server or peer services configurations. A hard disk with 8 MB of available space and an Ethernet or Token Ring adapter card are also required.

Ordering Information

PATHWORKS for OS/2 Order Codes	
Option	**Order Code**
PATHWORKS for OS/2 client license: gives you the right to use PATHWORKS for OS/2 client software on a single PC as well as PATHWORKS for VMS and ULTRIX server software.	QL-YFWAW-AA
PATHWORKS for OS/2 server license: offers DOS and OS/2 clients access to the licensed server's local mass storage or print devices. Each client must also be licensed.	QL-YLXAW-AA
Media and Documentation for Server and Client Products	
PATHWORKS for OS/2 client and server media (3.5 inch) and documentation.	QA-YFWAA-HC
PATHWORKS for OS/2 client and server media (5.25 inch) and documentation.	QA-YFWAA-H7
Documentation Only	
PATHWORKS for OS/2 user documentation: *Installation and Configuration Guide, User's Guide, Utilities Guide, LAN Manager User's Guide, LAN Manager's Administrator's Guide, LAN Manager's Administrator's Reference, Mail User's Guide, SEDT User's Guide, SETHOST Terminal Emulation Guide, Network Management Guide, Network Troubleshooting Guide,* and *DECnet for OS/2 Network Management Guide.* (**Note:** The media and documentation kits listed contain these documents.)	QA-YFWAA-GZ
PATHWORKS for OS/2 programmer documentation: *DECnet for OS/2 Programmer Reference Manual* and *LAN Manager Programmer Reference Manual.*	QA-YFWAB-GZ

PATHWORKS for OS/2 (TCP/IP)

PATHWORKS for OS/2 (TCP/IP) networking software option enables PATHWORKS for OS/2 clients to participate in a TCP/IP networked environment. Featuring an industry-standard RFC 1001/1002 NETBIOS implementation, PATHWORKS for OS/2 (TCP/IP) lets users use industry-standard applications.

With this network transport option, PC users in TCP/IP networks can access the file and print services offered by PATHWORKS for VMS, ULTRIX, and OS/2 servers; use the mail services of PATHWORKS for ULTRIX and OS/2 servers; and run terminal emulators and PC DECwindows Motif in both Ethernet and Token Ring networks.

Features

- Telnet protocol for the PATHWORKS terminal emulators.
- File Transfer Protocol (FTP) to perform network file operations.
- TCP/IP network management tools such as PING, ARP, and NETSTAT.

Licensing

In addition to being licensed to use the PATHWORKS for OS/2 product as either a client or server, each OS/2 system must also be licensed to use the PATHWORKS for OS/2 (TCP/IP) product.

Ordering Information

PATHWORKS for OS/2 (TCP/IP) Order Codes

Option	Order Code
PATHWORKS for OS/2 (TCP/IP) license: gives you the right to use the TCP/IP network transport on a single OS/2 system.	QL-XV7AW-AA
PATHWORKS for OS/2 media and documentation (5.25-inch and 3.5-inch); includes the TCP/IP network stack and various network management facilities. The PATHWORKS for OS/2 media and documentation kit is a prerequisite for the PATHWORKS for OS/2 (TCP/IP) product.	QA-XV7AA-HW

PATHWORKS for Macintosh

Developed jointly by Digital Equipment Corporation and Apple Computer, Inc., PATHWORKS for Macintosh gives users the best of both worlds: easy access to enterprise-wide capabilities while using their familiar Macintosh interface.

With PATHWORKS software, Macintosh users can access remote resources — file and print services, databases, electronic mail, and network services — on a local- or wide-area network.

The PATHWORKS software lets Macintosh users communicate with all other users connected to MAILbus. Through terminal emulation and an X Window System server, PATHWORKS provides access to production applications on the network.

Features

- Macintosh client application software
  - Electronic mail: Mail for Macintosh, a VMS Mail client, and a license for MAILworks for Macintosh, an X.400 mail client
  - MacX (V1.1.7), an X Window System server access for DECwindows Motif and other X Window applications
  - MacTerminal (V3.0) terminal emulator
  - Data Access Language client software
  - AppleTalk-to-LAT transport gateway
- Connectivity software components
  - DECnet for Macintosh: Network Control Program (NCP), File Access Listener (FAL)
  - Macintosh Communications Toolbox with ADSP tool for AppleTalk connection; Transport gateway access tool for AppleTalk to DECnet gateway; DECnet tool; CTERM tool for LocalTalk and wide-area terminal emulation; LAT tool for high-speed, local-area terminal emulation; MacTCP tool for TCP/IP connection with MacX; direct serial connection tool; modem tool; text transfer tool; and Xmodem file transfer tool
- Developer tools
  - Application Programming Interface (API) for AppleTalk for VMS V3.0
  - API for AppleTalk to DECnet transport gateway

Configuration Requirements

Ethernet connections can be handled by either Ethernet cards or a LocalTalk to Ethernet router. PATHWORKS for Macintosh supports AppleTalk Phase 2-compliant Ethernet cards, including the new Apple Ethernet card. LocalTalk to Ethernet routers include the FastPath 4 and 5, Cayman GatorBox CS, Webster Multigate, and Apple's Internet Router.

Prerequisite Hardware

Macintosh clients can be Macintosh Plus; Macintosh SE and SE/30; Macintosh II, IIx, IIcx, IIci, IIfx, and IIsi; Classic and LC models; Powerbook 100, 140, 170; Quadra 700 and 900; and the Portable. Digital recommends a Macintosh with 2 MB or more of RAM. ▲ Refer to the PATHWORKS for Macintosh Software Produc Description 31.53.00 for a complete list.

Prerequisite Software

The Macintosh client must be running Macintosh operating system V6.0.5 or higher, including V7.0. MAILworks for Macintosh requires MAILworks Server for VMS.

Licensing

Each Macintosh client system requires a PATHWORKS for Macintosh client license, which conveys the right to use both client and server software and Pacer for ULTRIX software.

Ordering Information

PATHWORKS for Macintosh media and documentation are available in VMS and ULTRIX formats. Order the kit appropriate to the server (VMS or RISC ULTRIX) you use.

PATHWORKS for Macintosh Order Codes

Option	Order Code
PATHWORKS for Macintosh client license.	QL-YPH9W-AA
PATHWORKS for Macintosh client media (TK50) and documentation kit (VMS format)	QA-YPHAA-H5
PATHWORKS for Macintosh client media (TK50) and documentation kit (ULTRIX format)	QA-YPHAB-H5
PATHWORKS for Macintosh client media (magtape) and documentation kit (VMS format)	QA-YPHAA-HM
PATHWORKS for Macintosh client media (magtape) and documentation kit (ULTRIX format)	QA-YPHAB-GZ
Documentation Only	
PATHWORKS for Macintosh documentation (VMS format)	QA-YPHAA-GZ
PATHWORKS for Macintosh documentation (ULTRIX format)	QA-YPHAB-GZ
PATHWORKS for Macintosh user documentation	QA-YPHAC-GZ
PATHWORKS for Macintosh programmer's documentation	QA-YPCAC-GZ

The PATHWORKS family of servers provide network operating system services (file and print), information access, system management, and flexibility to client PC users. A single PC client can concurrently access any combination of OS/2, ULTRIX, and VMS server systems. And as users' needs grow, they can add new PCs or new server systems anytime, anywhere. All without disrupting their network; without buying new software; and without changing the way they work.

Some PATHWORKS features are common to all servers. Others are unique to individual operating systems. The following features are common to all servers:

Features

- File and print services.
- Local-area and wide-area network capabilities over DECnet and TCP/IP.
- Electronic mail that lets users communicate with all other users on the network.
- Easy PC LAN administration through menus.
- High-level security for PC files stored on the server.
- Broadcast utility, allowing a system administrator to send messages to PC users connected to the local-area network.
- Date and time services.

PATHWORKS for VMS

PATHWORKS for VMS server software allows VAX systems to provide local- and wide-area network services to Windows, DOS, and OS/2 clients. It delivers the common PATHWORKS server features while providing a broad selection of client/server applications and a choice of networks.

PATHWORKS for VMS enables unattended backup of PC data stored on the file server and remote boot for DOS PCs configured with DECnet-based PATHWORKS and Ethernet network interface cards.

PATHWORKS for VMS software also enables remote management of multiple PC LANS from a single point. In addition, it enables remote system management and supports VMS Access Control List so system managers can specify privileges to assigned users.

Users have access to a rich set of distributed applications such as MAILworks, the DECquery applications for SQL database access, and DECtp DESKTOP for ACMS transaction processing.

PATHWORKS for VMS supports TCP/IP software of choice. DEC TCP/IP Services for VMS is supported out of the box. Or PATHWORKS Access Solution products can be used with Wollongong WIN, TGV Multinet, or Network Research Fusion TCP/IP software. Also, the software supports both Token Ring and Ethernet environments with the addition of network interface cards, such as EtherWORKS and Token Ring cards available from Digital. The server software also provides direct access to the DECnet SNA Gateway in organizations using the gateway.

Licensing

Each client requires a client license. The client license conveys the right to use both client and server software.

Ordering Information

PATHWORKS for VMS Order Codes	
Option	**Order Code**
PATHWORKS for VMS media and documentation (TK50)	QA-A93AA-H5
PATHWORKS for VMS media and documentation (magtape)	QA-A93AA-HM
PATHWORKS for VMS documentation only (order if you require extra documentation)	QA-A93AA-GZ

PATHWORKS for VMS (Macintosh)

Developed jointly by Digital Equipment Corporation and Apple Computer, Inc., The PATHWORKS for VMS (Macintosh) server software enables VAX systems to provide local- and wide-area network services to Macintosh clients. VAX computers become servers for file and printer sharing, database access, electronic mail, and network services to large groups of Macintosh clients.

PATHWORKS for VMS (Macintosh) provides file services (which are as familiar as AppleShare services to Macintosh users) that provide the benefits of large disks, regular operator backups, and data security. Additionally, PATHWORKS software lets Macintosh users communicate with all other users connected to MAILbus.

PATHWORKS software gives Macintosh users the best of both worlds: easy access to remote resources on a local-area or wide-area network without leaving their familiar desktop environment. Macintosh users can select and use Digital and LaserWriter printers in the same way they select LaserWriter printers connected to an AppleTalk network.

Features

- VMS server software.
  - VAXshare file services, based on Apple Filing Protocol (AFP).
  - VAXshare print services for Apple LaserWriter, LaserWriter-PLUS, LaserWriter-II/NT, and LaserWriter-II/NTX; Digital's LN03R ScriptPrinter; PrintServer 20 and 40; and DEClaser 1150, 2150, and 3250 printers.
  - Network-based file and print server management.
  - Data Access Language server software with adapter for Rdb/VMS relational database.
  - PATHWORKS mail server.
  - AppleTalk for VMS V3.0.1, an AppleTalk Phase 2 implementation.
  - AppleTalk to DECnet transport gateway.
- Developer tools.
  - Application Programming Interface (API) for AppleTalk for VMS V3.0.
  - API for AppleTalk to DECnet transport gateway.

Prerequisite Software

VMS V5.3, V5.4, or V5.5

Licensing

Each Macintosh client requires a client license. The client license gives the Macintosh user the right to use both the client and the server software.

PATHWORKS for VMS (Macintosh) Order Codes

Option	Order Code
PATHWORKS for VMS (Macintosh) media and documentation (TK50)	QA-YPCAA-H5
PATHWORKS for VMS (Macintosh) media and documentation (magtape)	QA-YPCAA-HM
PATHWORKS for VMS (Macintosh) documentation	QA-YPCAA-GZ
PATHWORKS for Macintosh programmer's documentation	QA-YPCAC-GZ

PATHWORKS for ULTRIX

PATHWORKS for ULTRIX server software allows RISC and VAX systems to provide local- and wide-area server features to Windows, DOS, and OS/2 clients. In addition to delivering the common PATHWORKS server features, PATHWORKS for ULTRIX integrates PCs into the UNIX environment by providing SENDMAIL mail addressing and supporting such UNIX utilities as YP (Yellow Pages) and BIND/Hesiod (Berkeley Internet Name Domain) for naming.

PATHWORKS for ULTRIX server software also provides shared update of files among PC and UNIX applications by supporting native ULTRIX byte-range locking. This server also delivers ULTRIX enhanced security, allows unattended backup, and provides audit log files.

Licensing

Each client requires a client license. The client license conveys the right to use both client and server software.

Ordering Information

PATHWORKS for ULTRIX Order Codes

Option	Order Code
PATHWORKS for ULTRIX VAX media and documentation (TK50)	QA-YNGAA-H5
PATHWORKS for ULTRIX RISC media and documentation (TK50)	QA-YNGAB-H5
PATHWORKS for ULTRIX VAX media and documentation (magtape)	QA-YNGAA-HM
PATHWORKS for ULTRIX RISC media and documentation (magtape)	QA-YNGAB-HM
PATHWORKS for ULTRIX documentation only (order if you require extra documentation)	QA-YNGAA-GZ

Pacer for ULTRIX

Pacer for ULTRIX is a combination of Macintosh to ULTRIX connectivity products — PacerShare and PacerPrint — developed by Pacer Software and available from Digital.

PacerShare, a network-based file server for Macintosh users, uses AppleTalk Filing Protocol services with the ULTRIX operating system running on RISC systems. For example, with PacerShare a DECstation 3100 can become a fast AppleShare compatible file server. Macintosh users can connect to the file server through direct Ethernet connections or through a LocalTalk to Ethernet router. PacerShare file service supports standard ULTRIX access control and lets the system manager determine on a per-user basis who has access to a file or directory and the type of access that user receives.

PacerPrint is a standard ULTRIX spooling daemon, providing an interface to the print job queue, status reports, and error handling provided by the ULTRIX system. PacerPrint services allow Macintosh and ULTRIX RISC users to share LaserWriter, LN03R, LPS40, LPS20, and other Digital printers.

Prerequisites

Pacer for ULTRIX requires any RISC processor with a standard Ethernet controller and ULTRIX V4.2 operating system. Pacer for ULTRIX is compatible with PATHWORKS for Macintosh V1.1.

Licensing

Each Macintosh system accessing Pacer for ULTRIX must be properly licensed. The PATHWORKS for Macintosh client license grants the right to use Pacer for ULTRIX and to access multiple PATHWORKS and Pacer servers simultaneously.

Ordering Information

Pacer for ULTRIX Order Codes

Option	Order Code
Pacer for ULTRIX media and documentation (TK50)	QA-ME9AA-H5
Pacer for ULTRIX media and documentation (magtape)	QA-ME9AA-HM

PATHWORKS for OS/2

PATHWORKS for OS/2 server software provides full Microsoft LAN Manager V2.0 capabilities for Windows, OS/2, and DOS clients in Token Ring and Ethernet networks. That means OS/2 systems can function as servers and/or clients. PATHWORKS for OS/2 server software delivers the common PATHWORKS server features while also supporting LAN Manager's Application Programming Interfaces (APIs), such as Named Pipes, for developing and distributing applications between DOS and OS/2 systems and taking advantage of LAN Manager peer services. The software also supports multiple concurrent transports, including DECnet, TCP/IP, and NetBEUI.

This software supports TCP/IP through the PATHWORKS for OS/2 (TCP/IP) add-on option. The software also contains DECnet for OS/2 networking software for task-to-task communications, NETBIOS interface support, and network management and diagnostic tools.

PATHWORKS for OS/2 supports OS/2 Standard Edition V1.21 and V1.3, including the High Performance File System (HPFS), on servers.

Prerequisite Hardware

PATHWORKS for OS/2 requires an Intel 80286-, 80386-, or 80486-based processor with 6 MB of system memory for server or peer services configurations. A hard disk with 8 MB of available space is also required. In addition, the server software requires a network interface card — an Ethernet controller, such as an EtherWORKS card from Digital, or a Token Ring network interface card, also available from Digital. PATHWORKS for OS/2 runs on any industry standard PC such as DECpc, IBM AT and PS/2, COMPAQ, Olivetti, Toshiba, and Zenith Data Systems models.

Licensing

This software allows an OS/2 system to be a client or a server. While there is one media and documentation kit for both, there are two separate licenses. A client license (QL-YFWAW-AA) is required for each OS/2 client system. A server license (QL-YLXAW-AA) is required for each OS/2 server system. A client or server running the PATHWORKS for OS/2 (TCP/IP) option requires a TCP/IP license in addition to the base client or server license.

Ordering Information

PATHWORKS for OS/2 Order Codes

Option	Order Code
PATHWORKS for OS/2 Server License: offers DOS and OS/2 clients access to the licensed server's local mass storage or print devices. Each client must also be licensed.	QL-YLXAW-AA
PATHWORKS for OS/2 Client License: gives users the right to use PATHWORKS for OS/2 client software on a single PC as well as PATHWORKS for VMS and ULTRIX server software.	QL-YFWAW-AA
PATHWORKS for OS/2 client and server media (RX23) and documentation.	QA-YFWAA-HC
PATHWORKS for OS/2 client and server media (RX33) and documentation.	QA-YFWAA-H7

PATHWORKS for OS/2 Order Codes (Continued)	
Option	**Order Code**
PATHWORKS for OS/2 user documentation only (Note: The media and documentation kits listed contain all these documents.)	QA-YFWAA-GZ
PATHWORKS for OS/2 programmer documentation only	QA-YFWAB-GZ

Now users can easily combine the power of their standalone PCs with the resources, security, and manageability of a local server system. Digital offers three PATHWORKS server packages to help create a client/server network to fit any group. These packages have everything needed, including software, hardware, and documentation.

Digital's Packaged PATHWORKS Servers

Features	PATHWORKS Server 333	PATHWORKS Server 433	PATHWORKS Server 3100
CPU	Intel 80386	Intel 80486	VAX (CMOS)
Clock speed/performance	33 MHz	33 MHz	3.5 VUPs[1]
Standard memory	8 MB	8 MB	8 MB
Maximum memory	16 MB	64 MB	32 MB
Storage interface	SCSI, IDE	SCSI, IDE	SCSI
Standard hard disk storage	170 MB	640 MB	209 MB
Maximum hard disk storage	340 MB	4.4 GB	4.8 GB
Diskette storage	1.44 MB (standard)	1.44 MB (optional)	1.44 MB (optional)
Tape support	150 MB[2]	150 MB	95 MB
CD-ROM support	N/A	600 MB	600 MB
Console included	Color VGA graphics	Monochrome character cell	Monochrome character cell
PC Client operating systems	DOS, OS/2	DOS, OS/2	DOS, OS/2[3] Macintosh[3]
Network connectors	BNC (standard) AUI (optional)	BNC (standard) AUI (standard)	BNC (standard) AUI (standard)

1. VAX Unit of Performance
2. The PATHWORKS Server 333 offers the option of adding a second 150 MB streaming tape, available separately.
3. With the addition of optional software loaded on the server.

Digital's Packaged PATHWORKS Servers (Continued)

Features	PATHWORKS Server 333	PATHWORKS Server 433	PATHWORKS Server 3100
Software and documentation included	PATHWORKS for OS/2 server software and server license PATHWORKS for OS/2 client software[1] OS/2 SE V1.21 operating system	PATHWORKS for OS/2 server software and server license PATHWORKS for OS/2 client software[1] OS/2 SE V1.21 operating system	PATHWORKS for VMS PATHWORKS for DOS VMS V5.4
Menu interface	Yes	Yes	Yes
Client licenses included	No	No	No
User installable	Yes	Yes	Yes
Wide area network package available	Yes[2]	Yes[2]	Yes
Recommended use	Dedicated or nondedicated server; low-cost Intel server; small- to medium-sized office	Dedicated or nondedicated server	Dedicated or nondedicated server; 70+ simultaneous client PCs[3]; local- or wide-area networking

1. Client license(s) must be ordered separately.
2. When used in conjunction with a VMS or ULTRIX server.
3. Actual number is application dependent.

PATHWORKS Server 333

The PATHWORKS Server 333 is recommended for small work groups of PC users needing to share file, print, and resource services. This low-priced, Intel based solution is ideal when local area networking is the primary application. Providing PATHWORKS services and full support for LAN Manager V2.0 networking systems, this solution is particularly appealing for entry-level PC LANs.

As a DECstation 333c system, this 33 MHz Intel 80386-based server supports the High Performance File System (HPFS) and is fully compatible with Digital networks and PATHWORKS installations.

Features

- PATHWORKS for OS/2 server software.
- Server license, media, and documentation.
- The OS/2 Standard Edition V1.21 operating system.
- 8 MB of system memory, expandable to 16 MB.
- A 170 MB hard disk and SCSI adapter, expandable to 340 MB. A 150 MB streaming tape is also available as a second device option.
- A 101-key industry-standard keyboard.
- A two-button serial mouse.
- A 14-inch VGA color monitor.
- A DEC EtherWORKS network interface card.
- An easy-to-use installation and configuration utility.

Licensing

Each packaged server includes a server license. A client license must be purchased for each client PC. If a system is to function as both a server and a client, it requires a client license in addition to the included server license.

Ordering Information

PATHWORKS Server 333 Order Codes

Option	Order Code
PATHWORKS Server 333	DJ-PC4S3-AB
PATHWORKS for OS/2 client license	QL-YFWAW-AA
PATHWORKS for DOS client license	QL-0TLA9-AA

▲ Contact your Digital sales representative for information about peripheral devices.

PATHWORKS Server 433

The PATHWORKS Server 433 is based on a DECpc 433T system (an Intel 80486 33 MHz microprocessor using EISA bus architecture). This server is recommended for work groups of PC users needing to share file, print, and resource services. The PATHWORKS Server 433 provides PATHWORKS based services and full support for the LAN Manager V2.0 network operating system and is particularly appealing for work group PC LANs.

This server supports the High Performance File System (HPFS) of OS/2 V1.21 and is fully compatible with Digital networks and PATHWORKS installations.

Features

- 12 MB system memory, expandable to 64 MB.
- 640 MB of storage with two 320 MB SCSI disks. A 525 MB quarter-inch cartridge (QIC) for OS/2 is also available as an option.
- A 101-key industry-standard keyboard.
- A 14-inch monochrome monitor.
- A DEC EtherWORKS network interface card.
- The OS/2 Standard Edition V1.21 operating system.
- PATHWORKS for OS/2 server software, license, media, and documentation.

Licensing

Each packaged server includes a server license. A client license must be purchased for each client PC. If a system is to function as both a server and a client, a client license is required in addition to the included server license.

Ordering Information

PATHWORKS Server 433 Order Codes

Option	Order Code
PATHWORKS Server 433	DJ-PCTS1-AA
PATHWORKS for OS/2 client license	QL-YFWAW-AA
PATHWORKS for DOS client license	QL-0TLA9-AA

▲ Contact your Digital sales representative for information about peripheral devices.

PATHWORKS Server 3100

The PATHWORKS Server 3100 enables PC users to communicate and share resources with other users on a VMS network, yet requires little prior VMS knowledge. The software is factory loaded to facilitate installation. Based on Digital's VAXserver 3100 Model 20e system, the PATHWORKS Server 3100 meets the needs of up to 70 PC users working in local and remote PC networks. Once users have established a PATHWORKS Server 3100 network, they can add PCs and more servers without restructuring the network or interrupting services to current clients.

The PATHWORKS Server 3100 is available in several versions, including a wide area network (WAN) version that allows clients in multiple locations to connect to remote networks. The server can provide connections to DECnet, X.25, and SNA Gateway WANs. By combining wide area and local area networking in one server, the PATHWORKS Server 3100 can link your PCs into the enterprise-wide network.

Features

The server's base configuration, which provides a complete system with all necessary hardware, software media, and documentation, includes:

- 32-bit CMOS-based VAX CPU with floating point unit.
- 4 MB system memory, expandable to 32 MB total.
- 802.3 Ethernet (ThinWire or thick wire interface).
- One 209 MB internal storage device and one 95 MB streaming tape cartridge. The system has up to 4.8 GB of storage capacity.
- One external SCSI port and one SCSI port terminator.
- One 25-pin-to-MMJ DEC423-to-EIA-RS232 adapter (H8575-A).
- ThinWire Ethernet T-connector with two terminators.
- Thick wire Ethernet terminator.
- Universal power supply with automatic voltage sensing on system unit.
- VT420 video terminal with cable (BC16E-25).
- 101-key industry-standard keyboard, U.S., 120 V.
- Two-button serial mouse.
- Minimum one year product warranty.

Factory-installed software includes

- Complete PATHWORKS for VMS server software package consisting of
  - VMS V5.4 operating system applications and server (1–2 user) license and software.
  - DECnet VAX end-node license and software.
  - PATHWORKS for VMS software, including menu-driven administrator utility and broadcast utility.
- PATHWORKS for DOS client software. (The PATHWORKS Server 3100 can serve OS/2 and Macintosh PCs with additional PATHWORKS software and client licenses for each PC.)

The base system also includes a PATHWORKS Server 3100 system administrator documentation kit (including VMS System Manager and VMS User Guides) and a user's documentation kit.

Client licenses and PC Ethernet cards must be purchased separately.

Ordering Information

Server System

Each packaged system includes the hardware, software, and documentation listed previously plus the items listed for each order number in the following table. For international systems, add a video terminal (VT420) and a country kit (FC310-xx) for a complete system.

PATHWORKS Server 3100 Order Codes

Option	Order Code
LAN System — 209 MB system for local area networks. One RZ24 209 MB disk, one TZ30 95 MB streaming tape unit.	DJ-31EP2-AA/A9
LAN/WAN System — 209 MB system for DECnet and X.25 wide area networks (WAN P.S.I.). Includes one RZ24 209 MB disk, one DSH32-BA multifunction controller, one TZ30 95 MB streaming tape unit, DECnet full-function licenses, VAX WAN drivers license and software, VAX P.S.I. license and software, PATHWORKS software, and user documentation and license.	DJ-31ER2-AA/A9
LAN/WAN System — 209 MB system for DECnet and SNA wide area networks. Includes one RZ24 209 MB disk, one TZ30 95 MB streaming tape unit, a DEMSB-A WAN communications server package, DECnet SNA Gateway-ST and Management licenses and software.	DJ-31ER4-AA/ A2/A3
Country Kits consisting of a power cord and user documentation for the country selected	FC310-**

-AA = U.S., VT420 console terminal
-A2 = 110 V, international, no video terminal
-A3 = 240 V, no video terminal
-A9 = 110 V/420 V, no video terminal, no country kit

** Replace the ** with one of the following codes: AA (United States, Canada), AJ (Japan), AZ (Australia, New Zealand), BJ (India),

Note: The operating system is factory installed; PATHWORKS for VMS is loaded on disk and can be installed through a simple procedure. Clients are configured separately. Additional disks, memory, and other options that are not part of a packaged system must be ordered as spare parts and be installed by Digital Service.

Optional Mass Storage Devices

Internal storage: The system contains space for five SCSI storage devices. Two SCSI devices (one TZ30 tape and one RZ24 SCSI disk) are included in the base system; three additional internal storage units may be added.

Option	Order Code
121 MB SCSI 3.5-inch half-height fixed disk	RZ23L-EF
1.44 MB diskette, 3.5-inch half-height disk drive with adapter and controller	RX23-EK
209 MB SCSI 3.5-inch half-height fixed disk	RZ24-EF

External storage: A total of three external devices can be added to a base system. Select from the following:

Option	Order Code
Dual drive expansion box. Refer to *VAX Systems and Options Catalog* (SOC) for ordering information	SZ12
1.2 GB DAT tape drive, tabletop enclosure; two maximum; includes 120 V power cord	TLZ04-FA
600 MB CD-ROM SCSI tabletop; includes 120 V connecting cables and power cord	RRD42-FA

Power Cords for 240 V Options

Option	Order Code
Power Cord (220 V – 240 V)	BN19*-2E
Note: Order the 120 V RRD40 for Japan, Mexico, and Canada	
* Replace the * with one of the following codes: A (United Kingdom, Ireland), C (Germany, Austria, Belgium, Finland, France, Holland, Norway, Portugal, Spain, Sweden), E (Switzerland), H (Australia, New Zealand), K (Denmark), M (Italy), S (India), U (Israel)	

Additional Memory

The memory expansion slot allows up to 32 MB of total system memory. An MS42-AB (4 MB) memory module is included along with 4 MB of memory built into the motherboard. With the addition of one MS42-KA (8 MB), the system total is 16 MB. With the addition of the MS42-CA (16 MB), the system total is 24 MB. To obtain 32 MB of memory, the MS42-AB is removed and an MS42-BA and an MS42-CA are installed.

Option	Order Code
4 MB memory module	MS42-AB
8 MB memory module	MS42-KA
12 MB memory module	MS42-BA
16 MB memory module	MS42-CA

Communications Options

The DSH32-BA and VMS WAN driver software are included with the DECnet X.25 wide area network configuration. To add a second synchronous line, refer to the "Networks and Communications" chapter of the *VAX Systems and Options Catalog*, for ordering information. VAX WAN driver software is required when using the synchronous port.

Asynchronous/Synchronous

Option	Order Code
8-line asynchronous/1-line synchronous; includes controller and EIA-232/V.24 synchronous modem cable	DSH32-BA
8-line asynchronous/1-line synchronous; includes controller and EIA-423/V.10 synchronous modem cable	DSH32-BB
8-line asynchronous/1-line synchronous; includes controller and EIA-422/V.36 synchronous modem cable	DSH32-BC

Synchronous

The packaged LAN/WAN configuration for DECnet and P.S.I. X.25 uses the PATHWORKS Server 3100 as both a LAN server and a WAN router. For higher-performance applications, a separate microserver should be used for WAN applications.

Option	Order Code
DEMSB Microserver, 1-line DECrouter server	DEMSB-DA
DEMSB Microserver, 1-line X.25 router server	DEMSB-XA

Conversion/Upgrade Options

Option	Order Code
Converts a PATHWORKS Server 3100 or PCLAN/ Server 3100 to a multiuser PATHWORKS Server 3100	310XR-AD
Upgrades a PCLAN/Server 3100 to a PATHWORKS Server 3100	310XR-EA

External Options

To add printers, terminals, and networking options, contact your Digital sales representative.

PC Requirements

Each PC requires a PATHWORKS for DOS or OS/2 license and a DEC EtherWORKS or other supported third-party Ethernet controller.

PC software options (DECnet SNA MS-DOS 3270 terminal emulation V2.0): DECnet SNA MS-DOS 3270 terminal emulator V2.0 license. One license must be ordered for each PC connecting to the gateway in the SNA WAN configuration.

Software license

Option	Order Code
Single-user license	QL-VFAA9-AA
8-user license	QL-VFAA9-AD
16-user license	QL-VFAA9-AE
32-user license	QL-VFAA9-AF
64-user license	QL-VFAA9-AG
128-user license	QL-VFAA9-AJ
500-user license	QL-VFAA9-AL

Software media

Option	Order Code
DECnet SNA MS-DOS 3270 terminal emulator media. Order one copy per network. (x denotes media): B = RX24 (3.5-inch) I = RX31 (5.25-inch)	QA-VFAAA-Hx

Software documentation

Option	Order Code
DECnet SNA MS-DOS 3270 terminal emulator documentation	QA-VFAAA-GZ
PATHWORKS Server 3100 system administrator documentation	QA-VHMAA-GZ
PATHWORKS Server 3100 user documentation	QA-VHMAB-GZ

Services

Option	Order Code
For WAN configurations	
VAX WAN device driver installation service.	QT-VAWA9-I9
VAX P.S.I. installation service.	QT-071A9-I9
SNA gateway orientation/installation service.	QSF01-SZ
For VMS	
Media Documentation Distribution Service (MDDS) provides for automatic distribution of new releases of PATHWORKS Server 3100 software during the agreement year. Included is the update for VMS, PATHWORKS for VMS, and PATHWORKS for DOS software.	QT-VHMAR-EW
Layered Product Services (LPS) provides phone support through a system administrator for PATHWORKS for VMS and PATHWORKS for DOS software (included with standard warranty).	QT-A93A9-LB

Most enterprises today recognize that electronic communication — across computer systems, departments, enterprises, and countries — is vital to competitive health. Yet such organizations also need to ensure that their workers have access to computers and software that support their work styles, personal preferences, job-specific needs, and ranges of technical literacy.

Extending an electronic mail system across such diverse platforms and technologies is the challenge Digital addresses and meets with its DEC MAILworks products for Microsoft Windows, Macintosh, and DOS users and with its Mobilizer for ALL–IN–1 product for portable PCs.

Note: The DEC MAILworks product family was formerly named ALL–IN–1 MAIL. The Messaging Program has decided to change the name of the ALL–IN–1 MAIL product set to DEC MAILworks. This change has been encouraged by our field personnel and customers due to the confusion of ALL–IN–1 MAIL with ALL–IN–1 Integrated Office System. This name change will take place gradually, as new releases of the current product are distributed. New products will be named DEC MAILworks at introduction.

DEC MAILworks for PCs

Taking advantage of Digital's PATHWORKS products for connecting systems, the DEC MAILworks family makes possible a worldwide mail system that supports both X.400-based and proprietary systems. The products implement the CCITT X.400 standards for public and private electronic mail systems.

Features

- Full-featured DEC MAILworks capabilities for Microsoft Windows, Macintosh, and DOS systems.
- Adherence to CCITT X.400 P1 and P2 User Agent recommendations for multinational, multivendor mail interconnection.
- Click-to-Launch feature for starting other applications from within mail on Windows and Macintosh clients.
- Full integration with multivendor mail systems through Digital's MAILbus.
- Personal Address Book for easy maintenance of mail addresses and nicknames; easily integrated with the MAILbus Distributed Directory Service for directory support throughout a multivendor network.
- Support for any number or type of message attachments.
- Sophisticated filing functions for storing messages locally or remotely.
- Remote dial-in for batch processing of mail collection and delivery — the most cost- and time-efficient way to read, write, file, or create messages when on the road.

Additional features include handling various file formats, configuring messages for maximum readability; online notification of message delivery; priority-based message delivery; message retrieval based on header fields and filing structures; and message redirection to a secondary address.

Digital offers the following personal computer mail solutions:

- DEC MAILworks Server Options
- DEC MAILworks for Windows
- DEC MAILworks for Macintosh
- DEC MAILworks for DOS
- MOBILIZER for ALL–IN–1

▲ Refer to Section 8, Electronic Messaging — User Agents, for information on these products.

TeamLinks for PATHWORKS

TeamLinks for PATHWORKS is Digital's premier team solution for work teams of all sizes. TeamLinks for PATHWORKS integrates personal productivity tools (such as a word processor or spread sheet) with electronic mail, workflow automation, document routing, conferencing, reference libraries, database access, document management, and other tools to facilitate the flow of information throughout the work group. TeamLinks for PATHWORKS delivers state-of-the-art, distributed, client/server technology for the Microsoft Windows environment.

TeamLinks for PATHWORKS Application Integration HUB for Networked Solutions

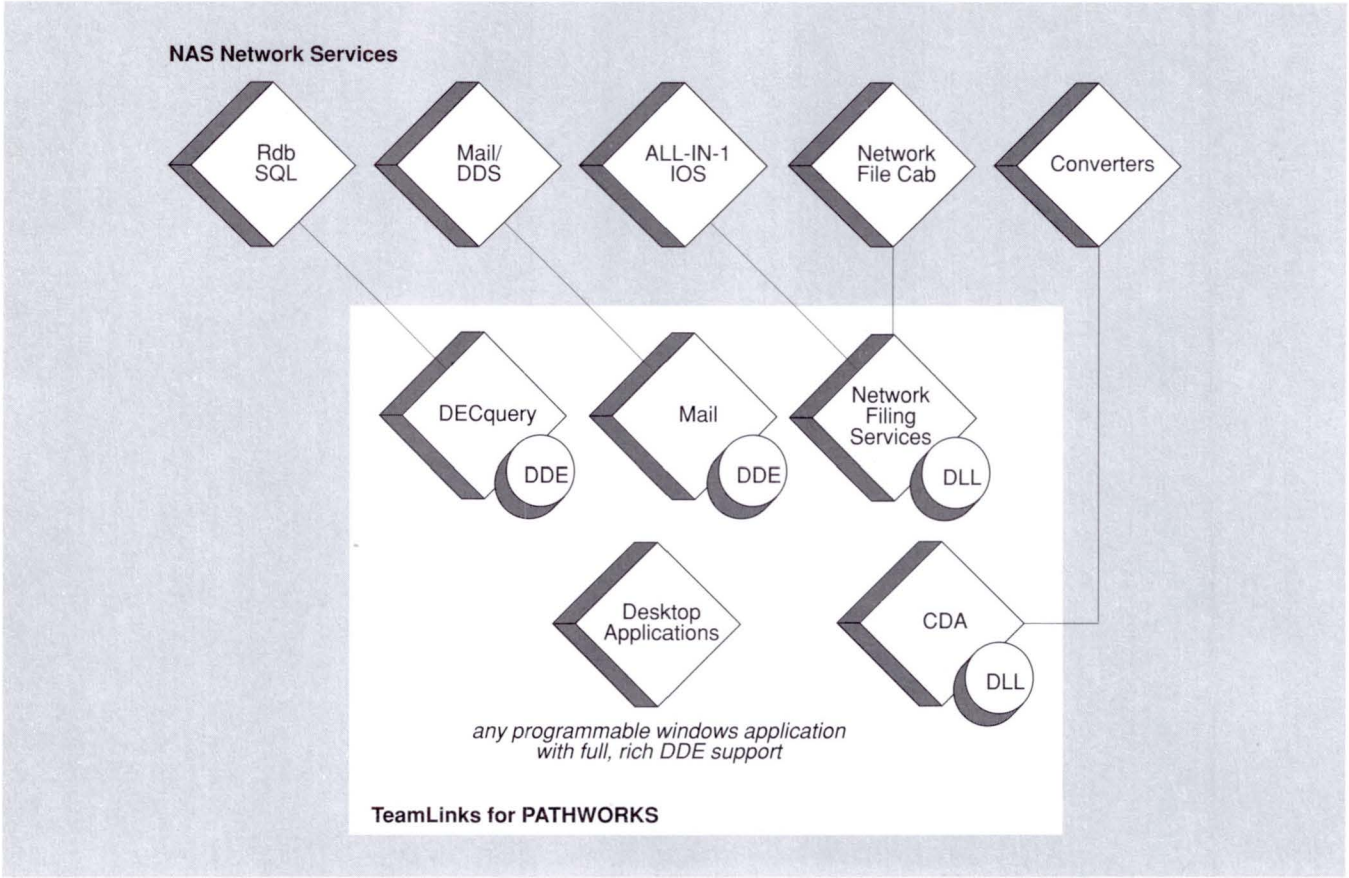

TBG-187–00

Features

- Electronic Mail:

  X.400 Mail — Provides customizeable client, complies with X.400 standards, includes distributed directory services, and integrates with Microsoft Windows applications. This is the only windows-based mail product that allows customization of the look, feel, and function of the mail user interface. In addition, the distributed file cabinet allows you to organize electronic messages for easy future retrieval.

- Electronic conferencing — Share information and discuss issues with users who are separated by space and time, and keep an audit trail of your discussions. Conference entries can be shared with non-participants via electronic mail.

- Browsing — A simple way to view and use information, such as content-based retrieval for searching by subject, plus copy, mail, and delete operations.
- Group Filing — Sharing of PC- and server-based files including ALL-IN-1 IOS Server V3.0 files; efficient sharing in real time of data and documents across and between work groups, and across and between multiple LANs.
- Document Conversion — Full set of converters that enable you to view and use information found on the LAN. For example: Digital's CDA Converter Library, KEYpak, and Halcyon.
- Work-flow automation and document routing — Starter applications for: Action Item Tracking; Purchase Order Request; Document Review and Signoff; Delegation/Please Handle; Meeting Announcement; Travel Authorization; and Automatic File and/or Software distribution. TeamRoute provides a means for routing, tracking, and managing live forms, and can help to streamline your business practices.
- Personal Productivity — Integration of Microsoft Word for Windows, PowerPoint, and Excel with X.400 Mail services; simplified data access and retrieval, and information organization.

The Information Manager

The Information Manager is the primary user interface for all electronic mail and file cabinet operations in TeamLinks for PATHWORKS. With the Information Manager, each user can create unique, personalized ways to access and organize data, documents, files, and other information.

From within the Information Manager, users have a fully functional, X.400-based electronic mail service, which also provides access to Digital's Distributed Directory Services. A Personal Address Book is provided for easy maintenance of mail addresses and nicknames. Users can create mail using their editor of choice and mail native document formats to other mail users. Users can send multiple binary attachments, and mix and match binary and text attachments in the same mail message.

Application launchers are supported within the file cabinet, enabling a user to select a document and automatically call the application that created the document. For example, a user can store a Microsoft Excel spreadsheet in the file cabinet and by simply double-clicking on the name of the spreadsheet, the user can view or edit the spreadsheet.

Distributed File Cabinet Access and Navigation

Distributed file cabinet access allows integrated Microsoft Windows applications to have access to a single logical file cabinet. Integrated applications (such as electronic mail) make file cabinet requests through a file cabinet Dynamic Link Library (DLL). When a user requests the file, the desired file format is automatically requested. For example, if the calling application is Microsoft Word for Windows, it is implicitly requesting that the file be delivered in Rich Text Format (RTF) format. If the file is not already in this desired format, a conversion service (such as the CDA Converter Library or Keyword's KEYpak) will automatically be called to make the necessary conversion.

Users can store information as MS-DOS files, in local or remote drawers of the TeamLinks file cabinet, or in an ALL-IN-1 IOS Server V3.0 file cabinet. When MS-DOS storage is selected, users are presented with a navigation structure similar to that which is presented in Windows applications. When users select TeamLinks storage, they are presented with the TeamLinks for PATHWORKS drawer/folder/document structure.

Prerequisite Hardware

DOS PC environment:

- 386-class DOS based PC
- 4 MB system memory
- Ethernet connection
- One diskette drive
- Hard disk

VAX VMS environment:

- NAS 300 server (MAILworks Server, PATHWORKS for VMS, VAX VMS V5.4, VAX Rdb/VMS V4.0 Run-time Library)
- TeamRoute Server V1.0
- VAX Notes V2.1

Prerequisite Software

DOS PC environment:

- MS-DOS V3.3 or later

VAX VMS environment:

- MAILworks Server V1.1
- PATHWORKS for VMS V4.0 or later
- VAX VMS V4.0 or later

Optional Software

- ALL-IN-1 IOS Server V3.0
- VAX Rdb/VMS V4.0 or later
- TeamRoute Server V1.0
- VAX Notes V2.1 or later
- DEC VTX V4.1 or later

Ordering Information

TeamLinks for PATHWORKS Order Codes	
Option	**Order Code**
TeamLinks Information Manager	QB-MDAAA-A*
Includes X.400 Mail Client with customizeable user interface; MAILworks Server license; Local (PC) and Server (LAN WAN) distributed File Cabinet; Read/Write access to ALL-IN-1 IOS Server V3.0 file cabinet; Document conversion services; Electronic Routing and Approval (TeamRoute)	
TeamLinks for PATHWORKS for Windows	QB-MHKAA-A*
Includes the Information Manager, plus a conferencing client for Windows, and working "as is" models of Microsoft Excel, Microsoft Word for Windows, Microsoft PowerPoint, DECquery, DECreport, and DECwrite	
TeamLinks for PATHWORKS for Word, Excel, and PowerPoint	QB-MHHAA-A*
Includes all the features of TeamLinks for PATHWORKS for Windows, plus full working versions of Microsoft Word for Windows, Microsoft Excel, and Microsoft PowerPoint.	
* Replace the * with one of the following codes: A = 3.5-in diskette B = 5.25-in diskette	

▲ Refer to the following sources for supported processors and operating systems:

- Software Product Description 37.36.00
- Unique Product Identifiers MDA, MHK, and MHH

PATHWORKS Links for Windows

PATHWORKS Links for Windows is a set of Microsoft Windows applications that run on PATHWORKS for DOS. PATHWORKS Links includes two components: PATHWORKS Conferencing for Windows and PATHWORKS Browser for Windows.

When these components are integrated into a PATHWORKS LAN, users receive benefits that surpass the sum of the parts. PATHWORKS Links for Windows enables users to improve personal productivity and improve their ability to navigate the network, and to work as a team with other users on the network.

PATHWORKS Conferencing for Windows, also available separately, is a client to the VAX Notes services available on the PATHWORKS server. This product enables groups to set up electronic conferences for sharing information regardless of time, location, or type of desktop.

PATHWORKS Browser for Windows, also available separately, allows a user easy access to DOS files anywhere on the wide-area network, regardless of the application used to produce the information. This product provides users with a global view of their files across multiple disks and directories. PATHWORKS Browser provides simple information retrieval capabilities as well as more sophisticated browsing based on content.

PATHWORKS Browser includes viewing and conversion services for the PC environment. It can handle all the intricacies of determining how and when conversions take place. ▲ Refer to the PATHWORKS for Browser Software Product Description 37.42.00 for a complete list of supported viewers and converters.

PATHWORKS Links for Windows with Mail option provides X.400 mail capabilities to Microsoft Windows users. This component enables Microsoft Windows users to exchange electronic mail with PC, Macintosh, workstation, and video terminal users. In addition, users can exchange mail with users of the ALL–IN–1 Integrated Office System, ULTRIX, VMSmail, PROFS, SNADS, DISOSS, and other mail systems that support the X.400 standard or Digital's MAILbus.

Prerequisite Software

To use PATHWORKS Links for Windows, users need PATHWORKS for DOS client software, Microsoft Windows V3.x, PATHWORKS for VMS server software, and the VMS Notes Server. Additionally, if you have PATHWORKS Links with MAIL for Windows, the MAILworks Server and VAX Message Router are required.

Ordering Information

PFATHWORKS Links for Windows Order Codes	
Option	**Order Code**
License	
PATHWORKS Links for Windows (includes PATHWORKS Browser and Conferencing) personal use license	QL-MEBAG-2B
PATHWORKS Links for Windows with MAIL (includes PATHWORKS Browser, PATHWORKS Conferencing, and MAILworks for Windows) personal use license	QL-MCUAG-2B
Media and Documentation	
PATHWORKS Links (includes PATHWORKS Browser and PATHWORKS Conferencing) media, documentation, and personal use license	QB-MEBAA-AA
PATHWORKS Links (includes PATHWORKS Browser and PATHWORKS Conferencing) media and documentation	QA-MEBAA-HB
PATHWORKS Links (includes PATHWORKS Browser, PATHWORKS Conferencing, and MAILworks for Windows) media, documentation, and personal use license	QB-MCUAA-AA
PATHWORKS Links (includes PATHWORKS Browser, PATHWORKS Conferencing, and MAILworks for Windows) media and documentation	QA-MCUAA-HB
Documentation Only	
PATHWORKS Links (includes PATHWORKS Browser and PATHWORKS Conferencing) documentation	QA-MEBAA-GZ
PATHWORKS Links (includes PATHWORKS Browser, PATHWORKS Conferencing, and MAILworks for Windows) documentation	QA-MCUAA-GZ

PATHWORKS Desktop Backup

Digital's PATHWORKS Desktop Backup product is a high-performance, low-cost, easy-to-use network backup solution providing backup and restore services to network-attached personal computers.

PATHWORKS Desktop Backup uses a client/server layered software approach to provide unattended backup of multiple PCs to one or more servers. Typical clients are IBM or IBM compatible PCs that have local disks with backup requirements. For V1.0, clients must use MS–DOS as an operating system and can optionally use Windows 3.0. A typical server is a VAX VMS platform with any supported tape drive; multiple clients on the network can be backed up by a single PATHWORKS Desktop Backup Server system. The server writes VMS Backup compatible save sets.

Features

- Easy to use graphical user interface.
- Supports both unattended or attended backup.
- Allows you to group several client backups into a single backup job.
- Flexible backups scheduling with automatic rescheduling.
- Backup history database for lookup of previously saved files.
- For each client, files can be specified to be backed up or restored or can be specifically excluded from the backup process.
- Backup administrator can access system logs of events, such as when backups occurred.
- System security features to maintain confidentiality of data.

PATHWORKS Desktop Backup Benefits

For the End-User	For System Managers
Relieves the PC user of the burden of backing up their own PC and thus increasing productivity.	Attended or unattended backup that can be scheduled when applications are not running.
Users can abort backup process to do work if needed.	Uses existing backup hardware attached to VAX processor.
For the client, it's "set up once and forget." After installation, backups occur automatically according to a schedule determined by the network administrator and the user.	VMS Saveset format allows restoration on alternative systems if necessary.
	Allows distributed backup over LANs and WANs with centralized control.

Prerequisite Hardware

- VAX VMS servers

Prerequisite Software

- PATHWORKS for VMS V4.0
- PATHWORKS for DOS clients
- PATHWORKS for DOS with Microsoft Windows 3.0 clients

Ordering Information

▲ For information on how to order the PATHWORKS Desktop Backup, consult your local Digital sales representative, or Digital Services Sales Support in the U.S. at 1-800-832-6277.

PATHWORKS Browser for Windows

PATHWORKS Browser for Windows extends the file management capabilities for navigating PC and/or network drives. The PATHWORKS Browser lets users access, view, convert, and locate information anywhere on their system.

Users can access files on the local PC as well as on disk anywhere in a LAN-based network, thus offering true distributed processing capabilities. (A LAN connection is required for this support.)

The PATHWORKS Browser viewing and conversion services will integrate leading converter products (e.g., KEYPak and DoDot). A common user interface is presented that "front-ends" the appropriate viewing and conversion service for that format. ▲ For a complete list of viewers and converters, see SPD #37.42.

PATHWORKS Browser provides many ways to locate information. Filters mask (block out) unwanted information and allow users to obtain detailed information quickly. For example, filtering is used in a large directory containing many file types when users want to see only specific file types.

Features

- Easy-to-use menus and online help.

  PATHWORKS Browser is layered on Microsoft Windows. All functions can be accessed by easy-to-use pull down menus or push buttons. Dialog boxes are used to input information.

- Mail integration.

  PATHWORKS Browser supports MAILworks for Windows or PATHWORKS MAIL to enable users to send mail messages to other users on the network.

- Use in a network or on a standalone PC.

  PATHWORKS Browser is an application that is layered on Microsoft Windows. Optionally, the PATHWORKS Browser software is also designed for use in a server/client environment. A DECnet connection is not required by PATHWORKS Browser for Windows unless users wish to browse in areas off the PC.

- Accelerator buttons.

  Accelerator buttons give users quick access to frequently used menu options.

- Ability to customize the environment.

  Users can customize PATHWORKS Browser to fit their needs and computing style.

- Flexible file filtering and searching.

  The PATHWORKS Browser search capability facilitates locating information within files located on multiple directories, including network drives. Users can search for:

  - Partial file names (starts/ends with, contains)
  - File content (contains/equals)
  - Creation dates (on, before, or after a specified time)
  - File size (equal to, greater than, smaller than)

Ordering Information

PATHWORKS Browser for Windows Order Codes	
Option	**Order Code**
License	
PATHWORKS Browser for Windows personal use license	QL-MCVAG-2B
Media and Documentation	
PATHWORKS Browser for Windows personal use license, media, and documentation	QB-MCVAA-AA
PATHWORKS Browser for Windows media and documentation	QA-MCVAA-HB
Documentation Only	
PATHWORKS Browser for Windows documentation	QA-MCVAA-GZ

PATHWORKS Conferencing for Windows

PATHWORKS Conferencing for Windows enables Microsoft Windows users to set up an electronic conference for sharing information regardless of time or location. Computer conferencing is a proven, computer supported, electronic messaging technology. Conferencing can be used for a variety of applications such as an electronic bulletin board, collaborative document authoring and review, and internal classes or seminars.

Features

- Distributed Access.

  PATHWORKS Conferencing clients can access VAX Notes conferences on any VAX Notes server node in a DECnet network, thus offering true distributed processing capability.

- Easy-to-use.

  PATHWORKS Conferencing is layered on Microsoft Windows. All functions can be accessed by easy-to-use pull down menus or push buttons. Dialog boxes are used to input information.

  PATHWORKS Conferencing is designed for inexperienced users. Online Help and tutorial documentation assists in familiarizing new users with PATHWORKS Conferencing quickly and easily.

- Built-in Editor.

  The PATHWORKS Conferencing client has a built-in editor, so users can create their own topics and replies without leaving the application.

- Imported Text.

  PATHWORKS Conferencing allows topics and replies to be created outside of the PATHWORKS Conferencing application (using any editor that can produce ASCII output files) and then later imported into the conference.

- Mail Integration.

  PATHWORKS Conferencing supports MAILworks for Windows or PATHWORKS MAIL to allow users to send notes to other users from within VAX Notes.

PATHWORKS Conferencing, one of the components of PATHWORKS Links for Windows is also available separately.

Prerequisite Software

The PATHWORKS Conferencing software is designed for use in a client/server environment. The following server products are required:

- VAX Notes
- PATHWORKS for VMS

A DECnet connection to a VAX Notes Server is required. The following communication software is required:

- PATHWORKS for DOS

Ordering Information

Order Codes

Option	Order Code
License	
PATHWORKS Conferencing for Windows personal use license	QL-MCWAG-2B
Media and Documentation	
PATHWORKS Conferencing for Windows personal use license, media, and documentation	QB-MCWAA-AA
PATHWORKS Conferencing for Windows media and documentation	QA-MCWAA-HB
Documentation Only	
PATHWORKS Conferencing for Windows documentation	QA-MCWAA-GZ

eXcursion for Windows

The eXcursion for Windows server enables Microsoft Windows users to display and control X Window applications on a PC within the Microsoft Windows environment. This product is a full implementation of the MIT X Windows Version 11 Release 4 server and provides local Microsoft Windows window management and control for applications based on DECwindows Motif, Open Look, or other X–11 toolkit implementations.

Components

- eXcursion for Windows server software
- Installation utility
- Program start utility for DECnet
- Dynamic Link Libraries (DLL) for network communications
- eXcursion for Windows User Guide, Quick Start Card, plus extensive online help
- DECwindows, MIT, and Open Look fonts
- Keyboard mapping files
- Template initialization file

Features

- Separate application windows for each X application displayed by the X server.
- eXcursion Setup Utility for installing eXcursion under Microsoft Windows.
- Option to add X application icons to a Microsoft Windows Program Manager group.
- eXcursion Control Panel for easy access to X applications and customization features.
- Extensive online help. With eXcursion for Windows online help you can get answers to your questions about setting up or using eXcursion.
- Cut and paste text or graphics between X applications and Microsoft Windows applications.
- Support for VGA and higher resolution monitors.
- Display up to 256 colors with the appropriate graphics controller.
- Complete library of fonts to use with X applications (both 75 and 100 dpi).
- Compile new fonts from source files, if needed for a particular application.
- Redefine the use of one or more keys on the keyboard.
- Specify a personal password for access to eXcursion.
- Microsoft Windows manages X window applications.
- Three button mouse emulation.

eXcursion for Windows application software is layered on Microsoft Windows, creating a unified operating environment where PC users can take advantage of X applications without learning a new interface.

eXcursion for Windows allows a personal computer running the DOS Operating System and Microsoft Windows to use X client applications available from a remote system, using DECnet or TCP/IP protocols. eXcursion for Windows supports PATHWORKS for DOS (TCP/IP), 3Com TCP with Demand Protocol Architecture, or FTP PC/TCP TCP/IP stacks. eXcursion for Windows supports PATHWORKS for DOS using the DECnet protocol.

Prerequisite Software

eXcursion for Windows is a layered application on Microsoft Windows. eXcursion for Windows requires Microsoft Windows V3.0 or V3.0a.

The eXcursion for Windows software supports DECnet and TCP/IP communication environments. One of the following communications software packages is required:

- DECnet using PATHWORKS for DOS (V4.0 or higher)
- TCP/IP using PATHWORKS for DOS (TCP/IP) (V1.0 or higher)
- TCP/IP using PC/TCP from FTP Software, Inc. (V2.05 or higher)
- TCP/IP using 3Com TCP with Demand Protocol Architecture (V1.2 or higher)

Ordering Information

eXcursion for Windows Order Codes

Option	Order Code
eXcursion for Windows on 3.5-in low-density (720 KB) diskettes	QB-MG7AA-AA
eXcursion for Windows on 5.25-in high-density (1.2 MB) diskettes	QB-MG7AA-AB

Digital offers both 802.3/Ethernet and 802.5/Token Ring network interface cards. The 802.3/Ethernet cards are described here. ▲ Refer to Section 5 for information on the 802.5/Token Ring interface cards.

DEC EtherWORKS Network Interface Cards

The DEC EtherWORKS family of network interface cards gives personal computers access to Ethernet networks and enables PCs to access the file, disk, application, print, and network services of the PATHWORKS network personal computing products.

Software drivers included with all DEC EtherWORKS products have been certified by Novell and Microsoft Corporation for compatibility with NetWare V2.15 DOS Client and NDIS V1.0.

Features

- Comprises a complete line of 8- and 16-bit network interface cards for ThinWire, thick wire, and unshielded twisted-pair (10BaseT) Ethernet.
- Supports multivendor PC LAN software.
- Supports PATHWORKS PC networks.
- Provides high performance and increased productivity for networked PCs.
- Connects PCs using Ethernet V2.0, IEEE 802.3, and 10BaseT standards.
- Requires only one PC slot.
- Supports remote boot capability of PATHWORKS software.
- Provides compatibility through built-in configurators.
- Allows flexible network topologies for a wide range of networking options.
- Provides multiple transmit and receive buffers and multicase address filtering to ensure performance during heavy network traffic times.

The seven members of the DEC EtherWORKS family are

- DEC EtherWORKS LC (DE100)
- DEC EtherWORKS LC/TP (DE101)
- DEC EtherWORKS Turbo (DE200)
- DEC EtherWORKS Turbo/TP (DE201)
- DEC EtherWORKS Turbo TP/BNC (DE202)
- DEC EtherWORKS MicroChannel (DE210)
- DEC EtherWORKS MicroChannel/TP (DE212)

The following chart shows how these products compare:

Comparison of DEC EtherWORKS Product Family

Description	DEC EtherWORKS LC (DE100) and LC/TP (DE101)	DEC EtherWORKS Turbo (DE200)*, Turbo/TP (DE201)*, and Turbo TP/BNC (DE202)	DEC EtherWORKS MicroChannel (DE210) and MicroChannel/TP (DE212)
Bus Architecture(s) Supported	XT	AT	MicroChannel
	AT	EISA	
Data Path	8 bits	16 bits	16 bits
Network Buffer RAM	64 KB	64 KB	64 KB
Slot Size	Half	Half	Full
Cable Connectors			
BNC and AUI	LC	Turbo	MicroChannel
	ThinWire (BNC)	ThinWire (BNC)	ThinWire (BNC)
	Thick wire (AUI)	Thick wire (AUI)	Thick wire (AUI)
TP and AUI	LC/TP	Turbo/TP	
	Twisted-pair (RJ45)	Twisted-pair (RJ45)	
	Thick wire (AUI)	Thick wire (AUI)	
TP and BNC		Turbo TP/BNC	MicroChannel/TP
		Twisted-pair (RJ45)	Twisted-pair (RJ45)
		ThinWire (BNC)	ThinWire (BNC)
PC Operating Systems Supported	DOS	DOS	DOS
	OS/2	OS/2	OS/2
PC LAN Compatibility	PATHWORKS	PATHWORKS	PATHWORKS
	Any IPX or NDIS-compliant NOS	Any IPX or NDIS-compliant NOS	Any IPX or NDIS-compliant NOS
Standards Supported	Ethernet V2.0	Ethernet V2.0	Ethernet V2.0
	IEEE 802.3	IEEE 802.3	IEEE 802.3
	10BaseT (DE101)	10BaseT (DE201)	10BaseT (DE212)
Remote Boot Support	Yes	Yes	Yes
FCC/VDE			
DE100	Class B		
DE200-AB		Class B	
DE210			Class B
FCC DE101	Class A		
FCC DE201		Class B	
FCC DE202		Class A	
FCC DE212			Class A
Customer-Installable	Yes	Yes	Yes

Comparison of DEC EtherWORKS Product Family (Continued)

Description	DEC EtherWORKS LC (DE100) and LC/TP (DE101)	DEC EtherWORKS Turbo (DE200)*, Turbo/TP (DE201)*, and Turbo TP/BNC (DE202)	DEC EtherWORKS MicroChannel (DE210) and MicroChannel/TP (DE212)
Documentation Included	User manual	User manual	User manual
Cable Included	No	No	No
License for PATHWORKS Software Included	No	No	No
Recommended Use	Low-cost controller; DEPCA-AA replacement	High-performance, high-traffic networks	High-performance MicroChannel bus
Target	Twisted-pair LANs (DE101)	Twisted-pair LANs (DE201 or DE202)	Twisted-pair LANs (DE212)

* The DE200-AB and DE201-AA are specified to operate correctly in PCs with I/O bus speeds equal to or below 8.33 MHz (AT/EISA Specifications). If I/O bus speed exceeds 8.33 MHz, in U.S. only call Technical Assistance at 800-DIGITAL for an alternative Digital product.

Ordering Information

DEC EtherWORKS Controller Order Codes

Option	Order Code
DEC EtherWORKS LC — Ethernet card with terminator and T-connector	DE100-AA**
DEC EtherWORKS LC/TP — Unshielded twisted-pair Ethernet card	DE101-AA**
DEC EtherWORKS Turbo — High-performance Ethernet card with terminator and T-connector	DE200-AC**
DEC EtherWORKS Turbo/TP — Unshielded twisted-pair Ethernet card	DE201-AA**
DEC EtherWORKS Turbo TP/BNC — High-performance twisted-pair (RJ45) or ThinWire (BNC) Ethernet card	DE202-AA**
DEC EtherWORKS MC — MicroChannel Ethernet card with terminator and T-connector	DE210-AA**
DEC EtherWORKS MC/TP — High-performance MicroChannel Ethernet card with BNC terminator and T-connector	DE212-AA**
Optional Hardware	
ThinWire Ethernet single-port repeater; connects one ThinWire segment with up to 29 daisy-chained PCs to an Ethernet backbone.	DESPR-AA
ThinWire Ethernet multiport repeater; provides ports to connect eight ThinWire segments and a port for connecting to standard baseline cable.	DEMPR-AA

** Notes:

1. Cables are not included. Order BNC, twisted-pair, and AUI cables separately.
2. PATHWORKS software for DOS and for OS/2 must be ordered as separate line items.
3. DEC EtherWORKS Ethernet network interface cards do not offer support for the Digital mouse. In the PATHWORKS environment, DEC EtherWORKS should be used only with 100 percent Microsoft compatible mouse devices.

EtherWORKS Router DECnet

The EtherWORKS Router DECnet V1.0 addresses the DECnet connectivity needs of small PC local area networks (LANs) in remote branch office locations usually found in retail, banking, service, and insurance businesses.

The EtherWORKS Router DECnet connects PC LANs to your DECnet wide-area network. By adding a DECnet router on an Ethernet/802.3 LAN, your PC (and other PCs on the LAN) can communicate with other DECnet nodes over asynchronous or synchronous connections that support the Digital Data Communications Message Protocol (DDCMP). The DDCMP ensures integrity and correct sequencing of messages between adjacent nodes.

The result is full access to a robust, wide-area network for file and print services and for client-server applications such as mail, conferencing, and browsing. In addition, your file and print services will work transparently over the WAN on other servers, helping you to get optimal use from your key resources.

The user can downline load the router software from any PC system running DOS and PATHWORKS for DOS software on the same Ethernet segment with the EtherWORKS Router. This includes the same PC system housing the EtherWORKS Router card as long as that PC has an additional Ethernet interface card.

Features

- Provides cost-effective routing for branch offices within a DECnet area as well as between DECnet areas.
- Combines PC-card hardware and routing software to run on your personal computers with no performance impact.
- Offers expandable memory (from 0.5 to 2.5 MB) to protect your investment through future software upgrades.
- Uses asynchronous and synchronous connections, allowing you to choose low-cost services.
- Selects the least-cost path and reroutes traffic if there is a line failure in the DECnet network.
- Supports up to 2 x 64 Kb/s, providing full backup line and growth capabilities plus the opportunity to move from low- to high-speed connections.
- Features easy-to-use DOS-based installation and single-box packaging.

Prerequisite Hardware

Note: The hardware and software can be configured on the same system if there is a separate connection to Ethernet in addition to the EtherWORKS Router connection.

- Any PC/AT-compatible personal computer to run the router software and hardware
- A minimum of one drive (3.5-inch 720 KB or 5.25-inch 360 KB) for software installation
- Optional adapter cables for high-speed ports

Prerequisite Software

- Valid configuration of the DOS operating system and PATHWORKS for DOS networking software

Disk Space Requirements for Load Host PC

- 1,250 blocks (640 KB) for installation
- 530 permanent blocks (270 KB) per router for use

Optional Hardware

- Modem (Digital's DF03, DF112, or DF224; Hayes SmartModem 2400; CODEX 2233/2260)

Licensing

A separate license is required for each EtherWORKS Router DECnet hardware unit on which the EtherWORKS Router DECnet software product will be used.

Ordering Information

EtherWORKS Router DECnet Order Codes

Option	Order Code
EtherWORKS Router DECnet kit includes the hardware module, software media, documentation, software license and associated cables.	DE206-AA
Additional cables	BC09R-03 BC09S-03 BC09T-03

7

Distributed Applications

This section contains the following topics:

Distributed Applications Overview	7-1
DECnet System Services	7-2
Business Communications	7-14
Electronic Data Interchange	7-28
Electronic Messaging	7-31
Electronic Messaging — MAILbus	7-34
Electronic Messaging — Services	7-48
Electronic Messaging — Enterprise Messaging Server	7-60
Electronic Messaging — User Agents	7-62
Electronic Messaging — ULTRIX	7-87

Distributed Applications

Distributed applications support large network environments, allowing network resources to be accessed as readily as if they were on a single system.

This section describes the following distributed applications that enhance the value and usefulness a network delivers:

- **DECnet System Services** — These services simplify network use and allow a user to access network resources as if those resources were on the user's system. They also allow a system manager to manage many remote VMS and ULTRIX systems in the network efficiently.
- **Business Communications** — These applications allow users to exchange information in a multivendor environment, to participate in online conferencing, and to share videotex information-retrieval services.
- **Electronic Data Interchange** — Digital's Electronic Data Interchange (DEC/EDI) increases the speed and accuracy of business transactions with trading partners, customers, suppliers, and subsidiaries.
- **Electronic Messaging** — These services allow users and application programs to exchange mail or messages in a multivendor environment. These services are based on the CCITT X.400 Recommendations for message handling.

Because customers must access and retrieve information easily, they require high performance regardless of network topology and a consistent interface for distributed resources. Digital's distributed applications provide efficient access to information in Digital and multivendor networking environments.

DECnet System Services is a set of networking products that make a network of VAX systems — including single systems, VAXclusters, and Local Area VAXclusters (LAVCs) — appear to be a single system for many key functions. DECnet System Services allows users to share and manage network resources as easily as if these resources were directly attached to the local system. DECnet System Services products include:

- VAX Distributed File Service (DFS) — Offers high-performance, network-wide file operations.
- VAX Distributed Queuing Service (DQS) — Provides distributed use and management of network printing resources.
- Remote System Manager (RSM) — Enables one system manager to efficiently and easily manage multiple distributed VMS and ULTRIX systems.
- DECdns — Provides a consistent, network-wide set of names for distributed applications.

Because DECnet System Services products are transparent to existing applications, applications do not have to be rewritten. Also, the average VAX user does not have to be retrained to use the DECnet System Services facilities.

Features

- Allows individual systems, VAXclusters, and Local Area VAXclusters to share data, printers, and system management resources.
- Files and printers do not have to be duplicated throughout a network because these resources can be made available to anyone needing access.
- One system manager can manage multiple networked systems.
- Transparency to applications makes it unnecessary to rewrite programs to take advantage of DECnet System Services.
- Provides for various management styles ranging from fully-centralized to fully-distributed network management.
- Provides network transparency to both users and applications.
- Supports local and wide area networks, and cluster topologies.
- Efficient management of PCLAN servers through software distribution and backup and restore services.

DECnet System Services Configuration

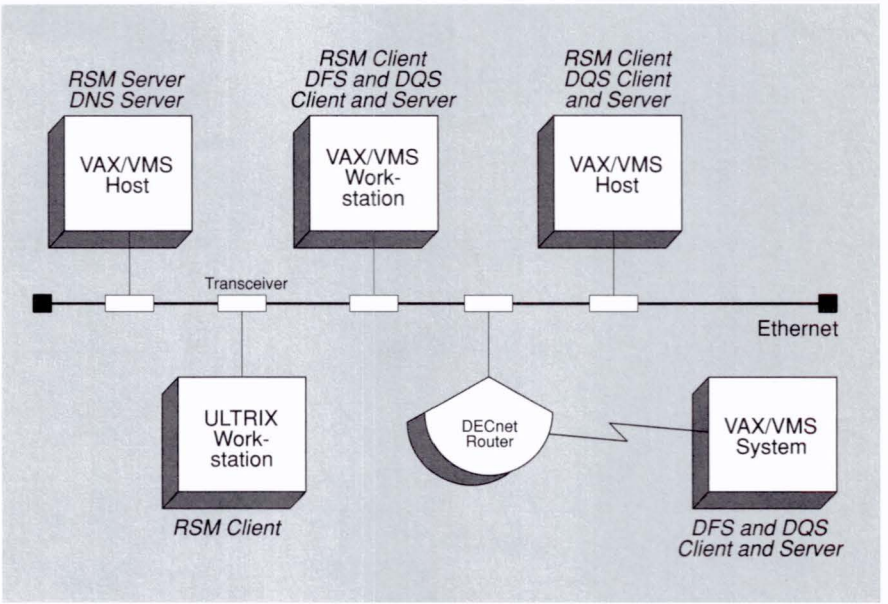

TBG-082-00

VAX Distributed File Service (DFS)

The VAX Distributed File Service (DFS) is a VMS layered product that provides DECnet VAX users with high-speed, transparent access to files stored on remote VMS disks as if they were on local disks. The DFS software supports applications that use virtual I/O and do not require write sharing.

Using the DFS software, directory structures (a directory and all of its subdirectories) and files can be made available to other DFS nodes. These directory structures are given names that are registered with the DECdns product. ▲ Refer to "DECdns," discussed later in this chapter for more information. The DECdns product provides location independence between the name that is associated with a directory structure and the physical location of that directory structure. If this directory structure were moved to a different location, only a single update would be required. After this single update, all DFS nodes automatically use the new location.

DFS nodes that wish to access distributed directory structures simply specify the name of the directory structure, using the MOUNT command supplied with the DFS software. The user can access files in that directory as though they were on the local system's disk.

A DFS license is required on each VMS node that either makes a directory structure available to other users, or wants to access remote directory structures. Any node with DFS software can be configured to operate as client-only or as both client and server. The DFS software does limit the number of client or server nodes.

VAX Distributed File Service

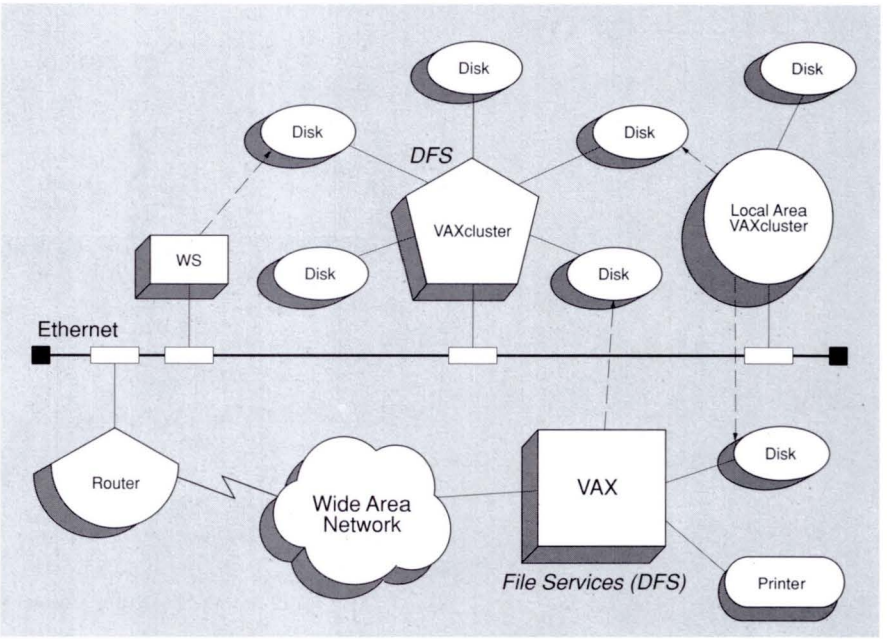

TBG-083-00

Features

- Provides users with high-performance file access while using fewer CPU resources than standard DECnet VAX file access.
- Use and management are similar to the use and management of a local disk.
- Supports all VMS file types.
- Supports the following VMS file operations:
  - Shared access (read)
  - Exclusive access (read and write)
  - All VMS Directory operations, including the creation and deletion of directories
  - Virtual I/O
  - Mapped I/O
- Transparent to VMS DCL commands that do not manipulate identifiers, or use logical, physical, or write-shared I/O.
- Uses the DECdns to provide location independence of data.
- Can be used in any DECnet environment, including local area networks and wide area networks. (Optimum performance for directory operations requires a link speed of at least 56.0 Kb/s.)
- Provides file security through standard VMS proxy mechanism.
- Performs end-to-end checksum to guard against network faults.
- Provides a management utility to control DFS components and to display statistical and error information.

Prerequisite Hardware

Any valid VAX or MicroVAX system with VMS or MicroVMS configured to operate on a DECnet network.

Prerequisite Software

- VMS operating system V4.4–V5.0 or MicroVMS V4.6–V4.7
- DECnet VAX V4.4 or later
- DECdns V1.0

Ordering Information

▲ Refer to the following sources for further information on supported processor and services.

- Software Product Description 28.78.00
- Unique Product Identifier VEQ

VAX Distributed Queueing Services (DQS)

The VAX Distributed Queueing Service (DQS) uses the DECnet software to extend the standard VMS print queue service, enabling users to print jobs on printers distributed across a local or wide area network. Users can also monitor or change parameters of the job after it is queued.

The DQS software operates within the client-server environment; print requests originate from a client node and are directed to server nodes that provide print services. Any node with DQS software can be configured to operate as client-only or as both client and server. The DQS software does not limit the number of client or server nodes, or queues. The system manager creates the queues and establishes the correspondence between client queues and queues on server nodes.

Features

- Supports local and wide area networks, allowing multiple VMS systems to share printers.
- Provides completely transparent support for most qualifiers of the VMS PRINT command.
- Attempts to transfer a print job whenever a server becomes available if it was previously inaccessible.
- DQS server queues can be configured to direct print jobs to a different queue if a printer is unavailable.
- Allows additional DQS queues and DQS nodes to be added without reinstalling the DQS software.
- Can be configured to limit access to servers, and to keep usage records.
- The DQS software can be used in any DECnet environment, whether wide area or local area network.

VAX Distributed Queueing Service

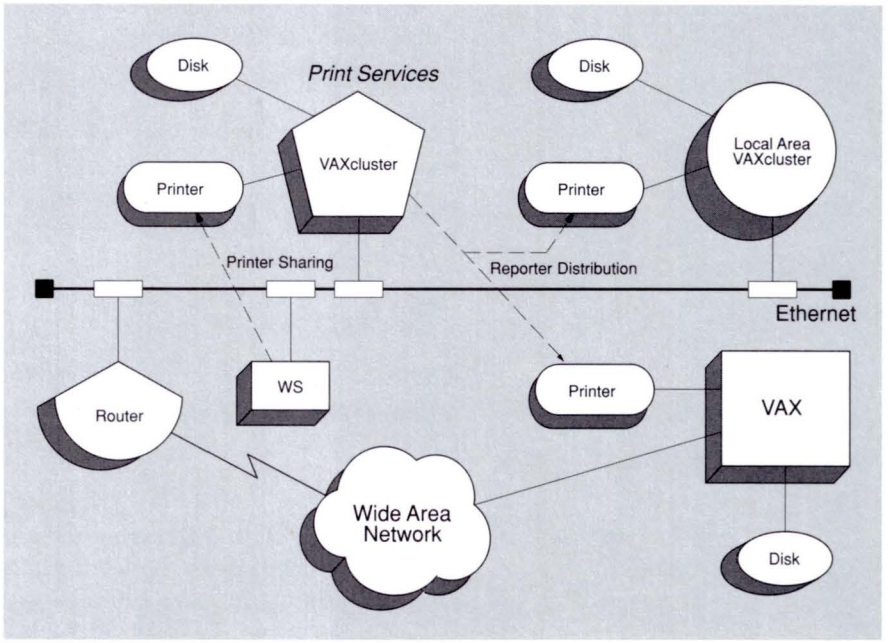

TBG-084-00

Prerequisite Hardware

Any valid VAX or MicroVAX system with VMS or MicroVMS configured to operate on a DECnet network.

Prerequisite Software

- VMS operating system or MicroVMS V4.4 or later (MicroVMS Base Component required)
- DECnet VAX V4.4 or later

Ordering Information

▲ Refer to the following sources for further information on supported processor and services:

- Software Product Description 28.80.00
- Unique Product Identifier VEN

DECdns

The DECdns software is a VMS layered product that provides distributed applications with a consistent, network-wide set of names called namespace. This corporate namespace makes it possible for users and applications to refer to resources in the network — like files, disks, and nodes — by using a single name, without having to know where the resource is located.

The DECdns software uses a client-server model. A DECdns server is a node that physically holds some or all of the DECdns database of names. DECdns clients are applications like the VAX Distributed File Service, Remote System Manager, and customer applications that use the DECdns software for storing and retrieving names. The DECdns software these client applications use is called the DECdns clerk. The DECdns clerk is distributed with VMS and uses DECnet software for its transport.

The DECdns software stores name information in databases on DECdns server nodes. The DECdns database can be distributed across the network on more than one node to provide availability and performance benefits. When more than one DECdns server is present in the network, the DECdns software coordinates the databases for consistency. As a general rule, two nodes configured as DECdns servers in each local area network should provide adequate performance and redundancy.

DECdns Configuration

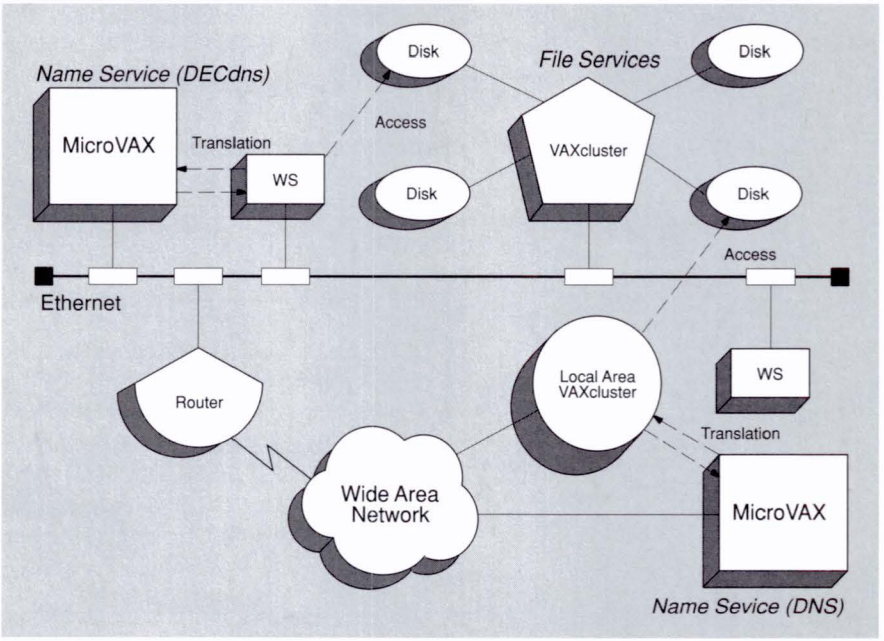

TBG-085-00

Features

- Provides a consistent network-wide set of names that allows applications to refer to network resources using the same name from any node in the network.
- Provides access control to each name stored in the name service on a per-user basis.

- Includes a DECdns management-control program to control DECdns operation and display statistical and error information.
- Provides network event logging using the DECnet VAX event logging facility (the DECnet VAX NCP utility can be used to enable and disable name service events).
- Supports both wide area and local area networks.
- Stores and manages a large number of names for easier network growth.
- Ensures namespace consistency across all DECdns server nodes.

Prerequisite Hardware

Any valid VAX or MicroVAX system with VMS or MicroVMS configured to operate on a DECnet network.

Prerequisite Software

- VMS operating system V4.6–V5.0
- DECnet VAX V4.4–V5.0

Ordering Information

▲ Refer to the following sources for further information on supported processor and services:

- Software Product Description 28.79.00
- Unique Product Identifier VER

DECmessageQ Message Bus

DECmessageQ provides a powerful, yet easy to use, set of tools for building distributed software solutions for heterogeneous, multivendor distributed computing environments. DECmessageQ features message recovery services, selective broadcast services, productivity tools and integration features that allow for efficient and effective development of distributed applications. DECmessageQ supports both asynchronous and synchronous client/server interprocess application models, and is currently used in mission critical applications in the manufacturing, process control, financial and defense industries.

DECmessageQ is supported on the following software architectures: VMS (development and run-time only, DECnet and TCP/IP server), VMS LU6.2 Services for IBM CICS and IMS Interconnect (client), ULTRIX VAX V1.0 (DECnet based client), ULTRIX VAX V2.0 (TCP/IP-based server), ULTRIX RISC V1.0 (DECnet-based client), ULTRIX RISC V2.0 (TCP/IP-based server), MS-DOS (client), OS/2 (client), and Macintosh (client). Also, for multivendor UNIX platforms DECmessageQ supports the HP UX (server), SYSTEM V/88 (server), and SUN (server) computing environments.

DECmessageQ simplifies the problem of integrating existing and/or new distributed applications in a heterogeneous, multivendor environment. DECmessageQ enables developers to save time and money in building and integrating modular distributed applications on heterogeneous and multivendor platforms, reducing time to market for software efforts.

DECmessageQ Architecture

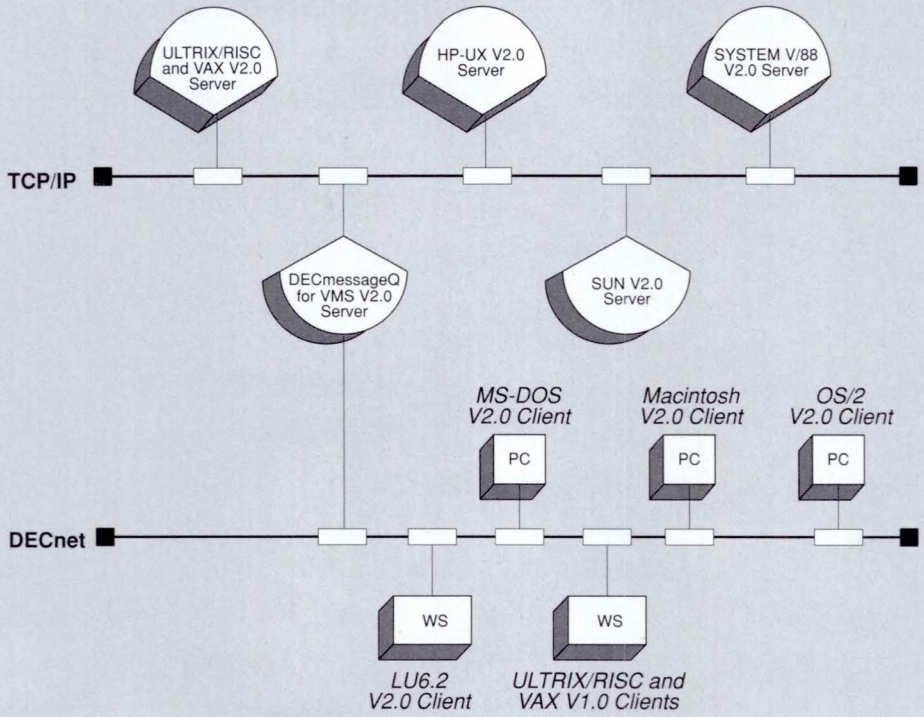

TBG–191-00

Features

- Message sizes up to 32,000 bytes and priority queuing of messages.
- Message recovery services and selective broadcast services (VMS only).
- Use of intra-CPU naming through high-speed global sections and inter-CPU naming through distributed name service (VMS only). Use of intra-CPU naming through a local name service (UNIX).
- A maximum of 999 queues per DECmessageQ group and a maximum of 32,000 DECmessageQ groups.
- Portable call interface with utilities for monitoring the network configuration and flow of messages.

Prerequisite Software

VAX VMS software requirements for systems using terminals (no DECwindows interface):

- VMS Operating System V5.3 – V5.5
- VMS ULTRIX Connection V1.3A or DEC TCP/IP Services for VMS V2.0
- DECnet SNA VMS APPC/LU6.2 Programming Interface V2.2, at a minimum (for LU6.2 Services option only)

UNIX and ULTRIX software requirements for systems using terminals (no DECwindows interface):

- ULTRIX Operating System, Version 4.1
- HP UX Operating System, Version 7.05
- SYSTEM V/88 Operating System, Version R3.2V2 with all fixes through fix tape FH32.20 applied
- SunOS Operating System, Version 4.1.1

Ordering Information

DECmessageQ Order Codes	
Option	**Order Code**
VMS V2.0 Dev — Server	QL–GKPA9–J*
VMS V2.0 Rto — Server	QL–GHVA9–J*
VMS LU6.2 Services V2.0 — Client	QL–GKQA9–J*
ULTRIX VAX V1.0 — Client	QL–GHUA*–AA
ULTRIX VAX V2.0 Dev — Server	QL–MK5A*–AA
ULTRIX VAX V2.0 Rto — Server	QL–MKBA*–AA
ULTRIX RISC V1.0 — Client	QL–GHTA*–AA
ULTRIX RISC V2.0 Dev — Server	QL–MK6A*–AA
ULTRIX RISC V2.0 Rto — Server	QL–MKCA*–AA
SYSTEM V/88 V2.0 Dev — Server	QL–MK7AX–AA
SYSTEM V/88 V2.0 Rto — Server	QL–MKDAX–AA
HP–UX V2.0 Dev — Server	QL–MK8AX–AA
HP–UX V2.0 Rto — Server	QL–MKEAX–AA
Sun V2.0 Dev — Server	QL–MK9AX–AA
Sun V2.0 Rto — Server	QL–MKFAX–AA
Macintosh V2.0 — Client	QL–MK4AW–AA
MS-DOS V2.0 — Client	QL–GHRAW–AA
OS/2 V2.0 — Client	QL–GHSAW–AA
DECmessageQ DECstart (On-site Custom Training)	QS–GKPAA–4R
DECmessageQ Ed Services (Customer Training)	EY–D610E–LO
* Processor code	

Remote System Manager (RSM)

The Remote System Manager (RSM) product is a network layered product that enables one system manager to efficiently and easily manage many VMS and ULTRIX computer systems. Operating across a DECnet environment, a VMS based RSM server automates the recurring system management tasks of:

- Operating system installation
- Layered software distribution
- File backup and restore
- System administration

The Remote System Manager environment consists of one or more VMS based server systems and multiple VMS or ULTRIX client systems connected by means of DECnet software in a local or wide area network. The system manager, operating from the RSM management server, can remotely install software and schedule or initiate backups for the remote client's systems. This allows the system manager to manage more systems and offloads system management tasks from users so that they can be more productive on the job. The RSM product supports a wide variety of client systems, from single workstations to cluster members to PC LAN servers.

RSM server software has both a menu interface and a command line interface to the management tools that install software, control backup-and-restore services, and perform administrative tasks like distributing RSM logical names. You can, for example, create a client group or an application set by making menu choices or by issuing a series of RSM commands to suit your system management style.

Remote System Manager Configuration

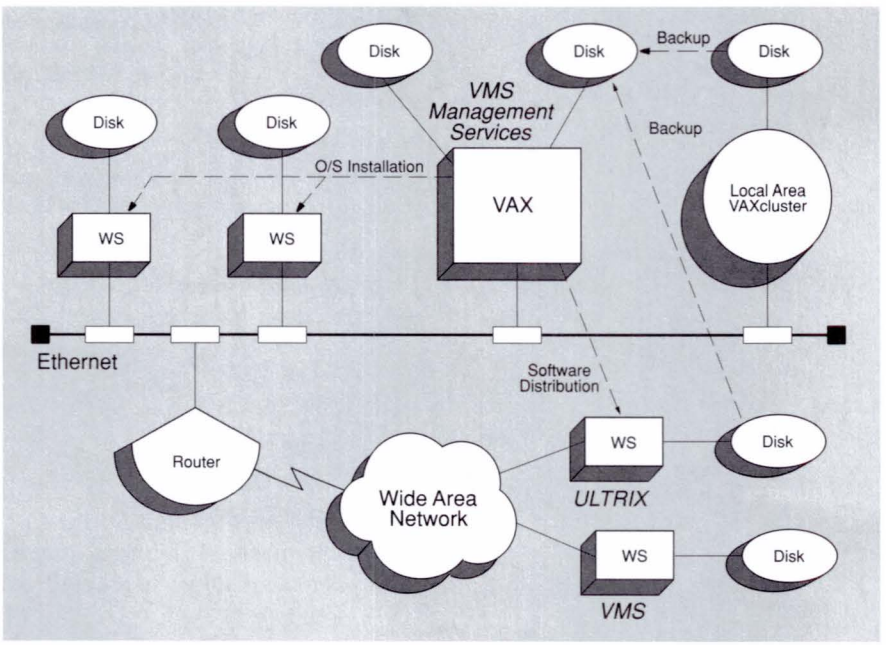

TBG-086-00

Features

- Centralized software installation and updating relieve users of system management responsibilities and ensure that they always have the latest versions of operating system software, applications, and tools.
- Centralized file backup allows for remote and unattended execution of backup operations and eliminates the need for users to perform their own backup.
- Centralized system management reduces the need for system support resources at remote sites, increases flexibility, and helps lower operating costs.
- Centralized name management, through use of the DECdns software, allows the system manager to define and deal with a group of clients as a single entity. With just one command, the system manager can initiate a task to run simultaneously on multiple clients.
- Centralized distribution and updating of VMS logical names and symbols, the DECnet database, and VMS license information helps guarantee accurate and simple access to network resources for users.
- Supports installation of layered software and backup-and-restore services in both a local area and a wide area network.
- Supports installation of VMS and ULTRIX operating systems in a local area network or an extended local area network.
- Supports clusters and PC LAN servers as clients.

Prerequisite Hardware

- For the RSM server, refer to Software Product Description 29.59.00 for supported processors.
- For the RSM client, all VAX and MicroVAX systems; at least one client must have a load device, such as a TK50 tape drive. Refer to Software Product Description 29.59.00 for supported processors, specific system and disk storage requirements.

Prerequisite Software

- For VMS servers:
  - VMS operating system V5.0–V5.2 or MicroVMS V4.6–V4.7
  - DECnet VAX V5.0–V5.2
- For VMS clients:
  - VMS operating system V4.6–V5.2 or MicroVMS operating system V4.6–V4.7
  - DECnet VAX V4.6–V5.2
- For ULTRIX clients:
  - ULTRIX V2.0–V3.0
  - DECnet-ULTRIX V2.0–V3.0
  - ULTRIX Worksystem software V1.1–V2.0
- DECdns V1.0 or V1.1 must be installed on at least one node in the network and accessible by means of DECnet from RSM server nodes. Installation on two systems is recommended to provide redundancy in the event of failure of one node.

A Remote System Manager server license is required on each VMS node configured as a server. A Remote System Manager client license is required on each VMS and ULTRIX system configured as an RSM client. Remote System Manager server and client nodes must be configured to operate in a DECnet network.

Ordering Information

▲ Refer to the following sources for further information on supported processors and services:

- Software Product Description 29.59.00
- Unique Product Identifier
  - VMS Server B13
  - VMS Client B14
  - ULTRIX Client ZEZ

Overview

Different electronic communications solutions are available to address virtually any user's communication need.

- VAX Notes — A computer conferencing software product.
- DEC VTX — Videotex is a distributed information retrieval service.
- TeamRoute — Workflow automation that routes ands tracks documents and forms through approval cycles.
- Computer Integrated Telephony (CIT) — Enables users to integrate telephone-switching with the data-processing capabilities of computer equipment into a single application.
- VOICEmail for VAX VMS Systems — A strategic solution for voice mail and call processing.

Other packages are also available:

- FAX Network Gateway — A PC-based solution for sending and receiving facsimile transmissions via PCmail, ALL–IN–1, and most mail systems using MRGATE, the VMSmail gateway.
- VICfax — Allows users to send and receive facsimile messages using a VAX computer running VMS, ALL–IN–1, or other mail utilities.

VAX Notes

VAX Notes is a client/server computer conferencing software product that allows users to create and access on-line conferences or meetings. Computer conferencing lets users conduct meetings with people in different geographic locations via computer so that participants can join in a discussion from their location at any time. It also keeps a detailed record of the proceedings of a meeting, which can be searched by a variety of criteria such as the name of a participant, subject, or keyword.

VAX Notes can also be used as an "electronic bulletin board" or collaborative document for authoring, reviewing, problem-solving, or for tapping resources that are available across a corporation. It can be used for internal classes or seminars, and can provide expertise to groups that lack resources in a given area by referencing expert resources in a company. VAX Notes provides an efficient communication flow across the corporate hierarchy. ▲ Refer to Software Product Description 27.06.00 for detailed information.

Features

- Distributed access — VAX Notes has been designed for optimal multinode access in a DECnet network, using server technology to achieve rapid response, even from distant nodes. VAX Notes conferences can exist on and be accessed from most desktop devices connected to a VMS node in a DECnet network via terminal emulation, offering true distributed processing and access capabilities. Users on remote nodes need not have an account on the node where the conference is located. VAX Notes can also be accessed from a Macintosh using MAX notes (order number QB-YYAAM-WA).

- Moderator support — A moderator is a person responsible for managing a conference, which can be public or private. For private conferences, the moderator can restrict access to a specific group of participants by specifying name and network location. Public conferences have no restrictions on who may participate. The moderator may send announcements of new conferences to participants, and has the ability to delete notes entered by other participants. Moderators can also create special notices that are displayed for all participants each time the conference is accessed.
- Ease-of-use — All functions can be accessed by easy-to-use commands, supported with on-line contextual help. This form of documentation quickly familiarizes new users with VAX Notes.
- Choice of editor interfaces — VAX Notes provides three screen-oriented user interfaces for editing, allowing users to specify EVE (an extensible interface), EDT-style keypad interface, or WPS-style Gold Keypad interface on ANSI-compatible terminals. VAX Notes also includes a line-mode editor for use on non-ANSI terminal devices.
- Topics and replies — VAX Notes uses a simple topic-and-replies structure to maintain conferences, with no difficult hierarchy to navigate. Directory listings show all topics by author, title and date, and the number of replies. All notes can be read either sequentially or at random. Also, users may read only those notes which they have not yet seen. VAX Notes allows participants to search for various topics and replies using the DIRECTORY and KEYWORD commands.
- Imported Text — VAX Notes allows notes and replies to be created outside VAX Notes (using any editor that can produce ASCII output files), then later imported to the conference.
- Mail Integration — VAX Notes uses VMSmail (included in the VMS operating system) to allow users to send notes or messages to other users from within VAX Notes.

Prerequisite Hardware

- VAX, MicroVAX or VAXstation configurations as specified in Software Product Description 27.06.00.
- Line-mode editing is provided for non-ANSI terminals supported by the VMS operating system.

Note: VAX Notes supports screen-oriented editing only on terminals that respond to ANSI control functions and that operate in ANSI mode. VAX Notes screen-oriented editing optimizes the features of the Digital VT100 and VT200 families of terminals.

Prerequisite Software

- VMS operating system V5.0, VAX workstations require VMS Workstation software.

Note: optional software includes DECnet VAX, ALL–IN–1 IOS Server, and VAX DECspell.

Ordering Information

VAX Notes contains three licensing options: a full-function server, a reduced-function client, and a user-based option. The server and user-based options allow access to all VAX Notes capabilities; the user-based option restricts the number of simultaneous users on the node or VAXcluster where the user-based option is installed. The client option contains the majority of VAX Notes functions, but prevents the creation of conferences. The VAX Notes client does not function without a VAX Notes server installed in the network. Use of the VAX Notes client and user-based options within the same cluster is prohibited.

Use the software order code template in Section 5 when building an order code number from the software's Unique Product Identifier. ▲ Refer to the Software Product Description, or consult your local sales representative to determine whether the software application ordered is supported by the processor for which it is intended.

- Software Product Description 27.06.00
- Unique Product Identifier 960

DEC VTX

DEC VTX is a software package layered on VMS that provides videotex services compliant with CCITT F.300 Recommendations. Videotex is a distributed information retrieval service that uses a tree-structured database through which the user navigates by selecting choices from a menu. The content of the videotex information base consists of full-screen "pages" of information.

The information contained in the infobase is prepared using standard Digital editors (DECwrite, WPS-PLUS, TPU, and EDT) and publishing applications that support DDIF output natively or through converters. DEC VTX provides:

- A distributed videotex service on VAX or MicroVAX systems and Digital networks.
- Access through terminals, PCs, and workstations.
- Page- and menu-oriented navigation through text and graphics information bases.
- An application-level protocol that permits communication between DEC VTX and transaction-oriented "remote" applications.

DEC VTX services users with both quick access to the system and the ability to peruse on-line information without training. DEC VTX provides services to two primary categories of user:

- The Information Provider (IP) prepares page-oriented information for entry into a DEC VTX infobase.
- The enduser or subscriber views, extracts, and uses the information stored in the DEC VTX infobase.

DEC VTX consists of several components, including VTX Server (SRV), Terminal Control Protocol/Concentrator (TCP/CON), Terminal Specific Module (TSM), VTX Update utility (VTXUPD), DEC VTX Workbench utility, External Link interface (ELK), VTX Application Service (VAS), and Remote Update Server Link (RUSL). The ELK, VAS, and RUSL utilities enable the programmer to build linkages to other applications or databases within VMS or other environments. ▲ Refer to Software Product Description 26.57.00 for further information.

Features

- DEC VTX Workbench provides an environment in which the Information Provider (IP) can storyboard, design, build, and maintain a VTX infobase. The IP can build a complete menu structure through a simple pictorial interface.
- Provides concentrator support for X.29 virtual devices, construction of X.25-based gateways, 3270-class terminals based on the use of the DECnet SNA VMS 3270 Data Stream Programming Interface, and customer-written IBM applications.
- The Terminal Specific Module (TSM) allows for changes in keypad to function mapping, to modify the Terminal Control Program.
- Supports CDA and the DECwindows user interface. Compound documents include text, graphics, images, and charts that can be stored in a DEC VTX infobase and viewed on a workstation. With DECwindows the user can navigate with the mouse and open two VTX DECwindows sessions to simultaneously view a menu and display a page.
- Document Paginator allows the VTX Information Provider to paginate documents for subsequent use by the VTX Update utility or the DEC VTX Workbench utility. The document paginator allows pagination of WPS-PLUS files, ASCII files, and DDIF documents.
- Template files enable a VTX Information Provider to associate some background set of information (usually containing company logos and other static information) with the page of information that is currently being entered.
- Context-sensitive keywords — Segmented keyword files allow for keyword matches based on the subscriber's current page context.
- The ALL–IN–1 Terminal Control Program is Included in the VTX base product and fully integrated with the ALL–IN–1 IOS Server as part of ALL–IN–1 V2.2 and later releases. It enables the ALL–IN–1 user to access DEC VTX using Gold Key mappings for the standard DEC VTX functions, and allows for integration with the ALL–IN–1 interrupt and scratchpad menus.
- Extensive on-line help is available whenever the end-user requests input.
- Support for the common user interface feature enables a customer site to establish a common user interface (whether it be PCs, workstations, or video display terminals) across the entire range of DEC VTX information retrieval applications.

Prerequisite Hardware

- Any valid VAX system configuration running VMS with at least 2 MB of dedicated memory.
- MicroVAX II systems must have
  - Minimum of 1 MB of memory
  - TK50 tape drive for installation of the software
  - RD-series system disk
- VAXstation II systems must have
  - Minimum of 1 MB of memory
  - TK50 tape drive for installation of the software

▲ Refer to Software Product Description 26.57.00 for block space requirements and supported terminals.

Prerequisite Software

VMS operating system V5.0 or later

Optional Software

VTXpress for access from a Macintosh, 3.5 inch media (QB-GLYAM-WA)

▲ For information on VMS classes and tailoring, refer to Software Product Description 25.01.00 and to Software Product Description 26.57.00.

Ordering Information

- Order a DEC VTX full license for the CPU on which the VTX information base will be developed and run. This license provides a functionally complete system containing all five VTX components.
- Order a Terminal Control/Concentrator license for each additional CPU that needs to access the information base over the network. This license provides only the TCP/CON and the TSM components. No information base development can be done with the TCP/CON license. A DEC VTX full license on another CPU is a prerequisite.
- Order the DEC VTX Remote Update license (QL-VZ4Ax-xx) to enable an Information Provider to update remote infobases over the network.
- Order the VAX VALU run-time license to copy a VALU application to another CPU.

Use the software order code template in Section 5 when building an order code number from the software's Unique Product Identifier (UPI). ▲ Refer to the Software Product Description (SPD), or consult your local sales representative to determine whether the software application ordered is supported by the processor for which it is intended.

- DEC VTX
  - SPD 26.57.00
  - UPI 031
- Terminal Control/Concentrator
  - UPI 033
- Run-Time Only Option
  - UPI VMB

TeamRoute V1.0

TeamRoute V1.0, from Digital Equipment Corporation, is designed to address a common business problem — how to improve and manage the process of routing forms, documents, and other types of information for review and needed approvals. TeamRoute brings the advantages of high-speed electronic networks to improve the business work flow process.

TeamRoute is capable of routing forms, word processing documents, images, CAD drawings, or spreadsheets to any person on the network. Whatever the item, TeamRoute will move it through a user-specified list of people and permit recipients to note their approval or disapproval. During the process, the item can be tracked and its status monitored.

The following figure illustrates typical TeamRoute workflow management.

TeamRoute Workflow Management

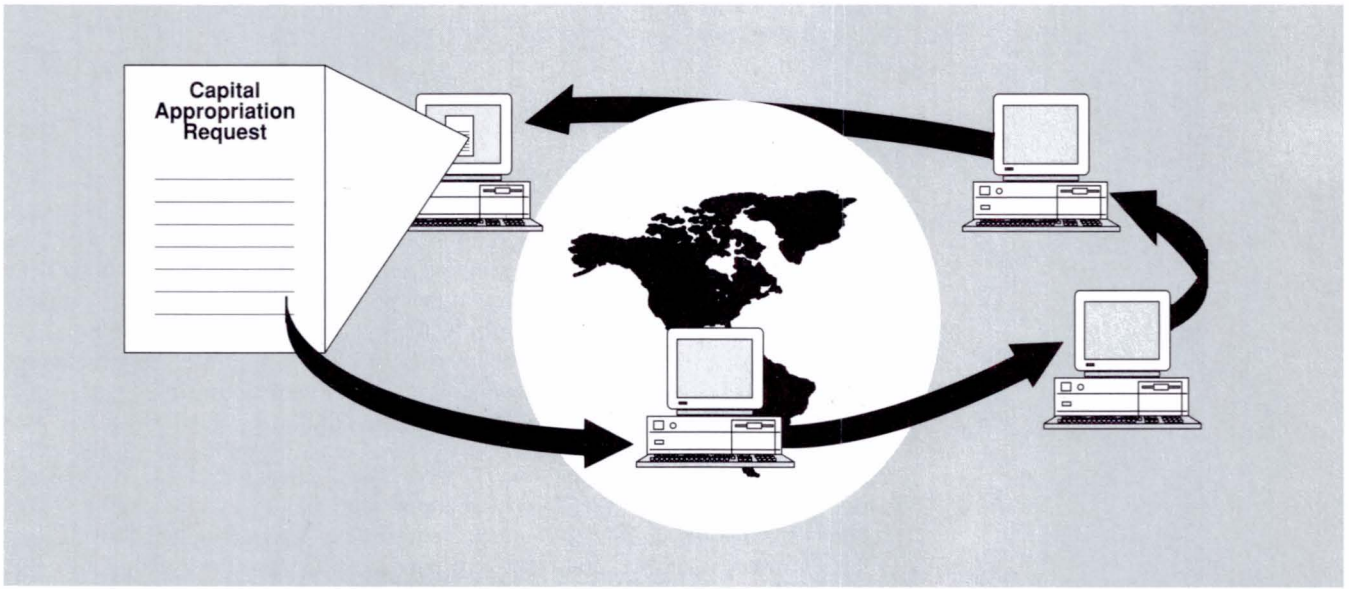

TBG-188–00

Features

- Streamlines business processes for reduced costs.
- Enables users to electronically route forms, word processing documents, images, CAD drawings, or spreadsheets for approvals.
- Tracks the progress and status of routed items.
- Uses a client/server architecture for video terminals, MS-DOS, and Microsoft Windows clients and the ALL–IN–1 IOS Server.
- Provides a set of ready-to-use applications (such as Purchase Order Request, Document Review, and Action Item Tracking) for immediate use.
- Offers an Application Programming Interface plus examples of applications, allowing programmers to develop new networked applications.

TeamRoute offers a set of ready-to-use applications allowing people to expedite the business workflow process quickly and easily. In addition to the ten out-of-the-box applications supplied (including Purchase Orders, Travel Authorization, and File Distribution), TeamRoute provides a template library that you can use to easily create forms and applications. Or, you can use your own forms package of choice since TeamRoute is form independent.

How TeamRoute Works

You can use a library of included templates to create a TeamRoute application, or design your own. Sample templates include the following:

Action Item Tracking
Document Review and Sign off
Read and Acknowledge
Telephone Slip
Account Request Form
Meeting Announcement
Answer a Question
Travel Authorization
Expense Voucher
Workgroup Sharing Request
PC Configuration Survey
File Distribution

A user creates a TeamRoute document by selecting a template, filling out a routing list, adding attachments, "signing" it, and sending it out to the routing list. The document becomes a Master Copy at this point and is stored in a file cabinet. The Master Copy gets updated through the life cycle of the document, and the user specifies that the TeamRoute document be tracked as it moves from recipient to recipient. TeamRoute also handles the routing of live data forms so that recipients can modify the information if authorized to do so.

TeamRoute can be used in environments where ALL–IN–1 IOS, DEC MAILworks, or TeamLinks for PATHWORKS are present, and uses a client/server architecture. The ALL–IN–1 IOS client requires the ALL–IN–1 IOS Server. DOS, Microsoft Windows, and video terminal clients require the appropriate DEC MAILworks client, the DEC MAILworks Server, and the TeamRoute Server for VMS.

Prerequisite Software

- VMS V5.2 or later
- ALL–IN–1 IOS V2.4 or later (for the ALL–IN–1 IOS Client)
- DEC MAILworks for DOS V1.1 (for the DOS Client)
- DEC MAILworks for Video Terminals V1.1 (for the VT Client)
- TeamLinks for PATHWORKS V1.0 (for the Microsoft Windows Client)
- DECnet VAX V5.2 or later

Ordering Information

TeamRoute offers a Traditional Use License for customers who want guaranteed access to the application by all users. Digital also provides a Personal Use License for customers who want to grow enterprise-wide applications from pilots with a predictable growth rate after they are out of the pilot stage.

TeamRoute Order Codes (Personal Licenses)

Option	Order Code
VT	QL-GEXAA-2B
VT 16MT9	QA-GEXAA-HM
VT TK50	QA-GEXAA-H5
VT DOC	QA-GEXAA-GZ
ALL–IN–1	QL-GEZAA-2B
ALL–IN–1 16MT9	QA-GEZAA-HM
ALL–IN–1 TK50	QA-GEZAA-H5
ALL–IN–1 DOC	QA-GEZAA-GZ
DOS	QL-GHDAF-2B
DOS RX23	QA-GHDAA-HC
DOS RX33	QA-GHDAA-H7

DOS users must also order the VT Client License (QL-GEXA*-**) in order to obtain the VMS Server.

Use the software order code template in Section 5 when building an order code number from the software's Unique Product Identifier (UPI). ▲ Refer to the Software Product Description (SPD), or consult your local sales representative to determine whether the software application ordered is supported by the processor for which it is intended. ▲ For specific information about system licenses, refer to the following sources:

- Software Product Description 33.75.00
- Unique Product Identifiers GEX (VT), GEZ (A1), GHD (DOS)

TeamRoute does not support the following processors: VAX-11/725, VAX-11/730,VAX-11/782, MicroVAX I, VAXstation I, and VAXstation 8000.

DEC Computer Integrated Telephony Server for VMS, V3.0 (CITSR)

The DEC Computer Integrated Telephony Server (CITSR) is a software product that links the Digital computing environment to a CIT-compatible voice switch. The CITSR supports the "request and status" communications link between the processor and several voice switches, including the AT&T DEFINITY Communications System, the Northern Telecom Meridian 1, the Mitel SX-2000, the Siemens Hicom 300, and the ROLM 9750 Business Communication System. This software version also implements the Computer-Supported Telecommunications Applications (CSTA) protocol, the emerging industry standard for switch-to-computer links, which has been defined by the European Computer Manufacturers Association (ECMA). Digital's implementation of CSTA enables a telecom equipment manufacturer to provide a connection from a CSTA-compliant voice switch to the CIT platform. The CITSR also supports multiline DECvoice, Digital's voice response system.

In the Digital computing environment, access to the CITSR is through the CIT Applications Interface software. The CITSR communicates with the CIT-compatible voice switch and the CIT Application Interface nodes by acting as an intermediary and passing messages between the switch and the CIT Applications Interfaces.

Features

- Manages the link between the voice switch and Digital's VAX VMS computing environment.
- Allows bidirectional communication of "request and status" information between the voice switch and the CIT Application Interfaces on client nodes.
- Is compatible with widely used voice switches.
- Offers a standards-based, open environment through the implementation of CSTA.

Prerequisite Hardware

- A VAX processor (for exceptions, read the SPD)
- For connection to voice switches (except AT&T DEFINITY — a synchronous communications device)
- For connections to AT&T DEFINITY: DIV32 ISDN controller
- DECvoice (optional): DTCN5/DTC05 options with appropriate VAX processor
- CIT-compatible voice switch configured to support the switch link protocol

Prerequisite Software

- VMS Operating System V5.0 or later
- DECnet VAX V.5.0 or later (end-node or full-function node license if more than one VAX computer is part of the configuration)
- VAX wide area network (WAN) device drivers V1.2 (not required with AT&T DEFINITY switch)
- DEC CIT Applications Interface for VMS or ULTRIX V3.0

Ordering Information

Use the software order code template in Section 5 when building an order code number from the software's Unique Product Identifier (UPI). ▲ Refer to the Software Product Description (SPD), or consult your local sales representative to determine whether the software application ordered is supported by the processor for which it is intended.

- Software Product Description 29.91.00
- Unique Product Identifier VGY

DEC Computer Integrated Telephony Server 100/500 V1.0 (CITSR 100/500)

The DEC Computer Integrated Telephony Server 100/500, Version 1.0 (CITSR 100/500) is a hardware/software package that includes the CIT Server software license and a DEC MicroServer hardware unit. The CITSR 100/500 runs on either the DEC MicroServer-SP (DEMSB) or DEC MicroServer (DEMSA) hardware units.

The CITSR 100/500 software image is installed and configured on a VAX VMS, VAX ULTRIX, or RISC ULTRIX system (termed a load host) on the same LAN as the DEMSA or DEMSB. The software image is then downloaded to the DEMSA or DEMSB hardware unit from the load host.

The CIT Server is software that links the Digital computing environment to a CIT-compatible voice switch. The CITSR 100/500 supports the "request and status" communications link between the processor and several voice switches, including the Northern Telecom Meridian 1, the Mitel SX-2000, the Siemens Hicom 300, and the ROLM 9750 Business Communication System. This software version also implements the Computer Supported Telecommunications Applications (CSTA) protocol, the emerging industry standard for switch-to-computer links, which has been defined by the European Computer Manufacturers Association (ECMA). Digital's implementation of CSTA enables a telecom equipment manufacturer to provide a connection from a CSTA- compliant voice switch to the CIT platform. The CIT Server also supports multiline DECvoice, Digital's voice response system.

In the Digital computing environment, access to the CIT Server is through the CIT Applications Interface software (described elsewhere in this section). The CITSR communicates with the CIT-compatible voice switch and the CIT Application Interface nodes by acting as an intermediary and passing messages between the switch and the CIT Applications Interfaces.

Features

- A combination hardware/software package that includes the CIT Server software and the DEC MicroServer hardware unit.
- Supported in RISC ULTRIX and VAX ULTRIX environments.
- Compatible with widely used voice switches.
- Offers a standards-based, open environment through the implementation of CSTA.

Prerequisite Hardware

- Any VAX or RISC processor as load-host, with Ethernet connection to the DEC MicroServer (included in DEC CIT Server 100/500)
- For connection to voice switches: a synchronous communications device (**Note**: AT&T DEFINITY is not supported with the DEC CIT Server 100/500, Version 1.)

▲ For any exceptions refer to the Software Product Description.

Prerequisite Software

- VAX VMS load-host processor: VMS operating system V5.0 or later; DECnet VAX V5.0 or later
- VAX ULTRIX load-host processor: ULTRIX operating system V4.0–V4.2; ULTRIX worksystem software V4.0–V4.2; DECnet for ULTRIX V4.0–V4.2
- RISC ULTRIX load-host processor: ULTRIX Operating System V4.0–V4.2; ULTRIX worksystem software V4.0–V4.2; DECnet for ULTRIX V4.0–V4.2

Ordering Information

Use the software order code template in Section 5 when building an order code number from the software's Unique Product Identifier (UPI). ▲ Refer to the Software Product Description (SPD), or consult your local sales representative to determine whether the software application ordered is supported by the processor for which it is intended.

- Software Product Description 33.36.00
- Unique Product Identifier XNQ

DEC Computer Integrated Telephony Applications Interface for VMS, ULTRIX V3.0

The CIT Applications Interfaces (CITAI) for VMS and ULTRIX are software packages that provide programmers with a library of programming routines. These routines enable an application to initiate telephony functions and control and monitor communications channels between the voice switch, the CIT Server and client systems on which applications reside. In addition, the CITAI allows the programmer to establish channels with one or more DECvoice modules. (DECvoice is Digital's voice response system.) The CITAI passes the application requests to the DEC CIT Server software, which is connected to a CIT compatible voice switch.

The CITAI programming routines are can be grouped broadly according to the following functions:

- Control and monitor the communications channel:
  - Assign/deassign channel (for example, telephone line or extension, Automatic Call Distributor [ACD] queue, DECvoice line)
  - Set device attributes (monitor, call forward, do-not-disturb, set or cancel message waiting lamp, set ACD agent status)
  - Get device attributes (same as above)
  - Get channel information (channel type, device name and type, monitored functions)

- Get event (returns call progress information — including call states, events and call party information, such as Automatic Number Identification [ANI] and Dialed Number Identification Service [DNIS])

- Call processing:
  - Making and disconnecting calls
  - Holding and retrieving calls
  - Canceling calls and responding to incomplete calls
  - Transferring and conferencing calls
  - Predictive dialing
  - Routing calls
- DECvoice routines:
  - Voice digitization (recording voice)
  - Voice synthesis (converting text-to-speech)
  - Playing text or digitized voice messages
  - Voice message handling
  - Speaker-independent voice recognition
  - Generating and recognizing tones

Note: Actual functions may vary with the voice switch in use.

Features

- Comprehensive library of programming routines to invoke telephony features and control and monitor communications channels.
- Interface routines employ the same high-level calls to the CIT server software to invoke functions, regardless of the switch involved.
- Enables applications to control both voice switch channels and DECvoice channels through a single programming interface.

Prerequisite Hardware

- VMS: VAX processor
- ULTRIX: VAX or RISC processor

Prerequisite Software

- VMS Processors
  - VMS Operating System V5.0–V5.4
  - DECnet VAX V5.0–V5.4 (end-node or full-function node license if more than one VAX is part of the configuration)
  - DEC CIT Server for VMS V3.0 or DEC CIT Server 100/500
- ULTRIX Processors
  - For all systems: DECnet ULTRIX, V4.0–V4.2
  - For timesharing systems: ULTRIX Operating System V4.0–V4.2
  - For workstations: ULTRIX Worksystem Software V4.0–V4.2
  - DEC CIT Server for VMS V3.0 or DEC CIT Server 100/500

▲ For complete hardware and software requirements, refer to the Software Product Description.

Ordering Information

Use the software order code template in Section 5 when building an order code number from the software Unique Product Identifier (UPI). ▲ Refer to the Software Product Description (SPD), or consult your local sales representative to determine whether the software application ordered is supported by the processor for which it is intended.

- Software Product Description 34.25.00-A
- Unique Product Identifier GMU

Computer Integrated Telephony (CIT) Configuration

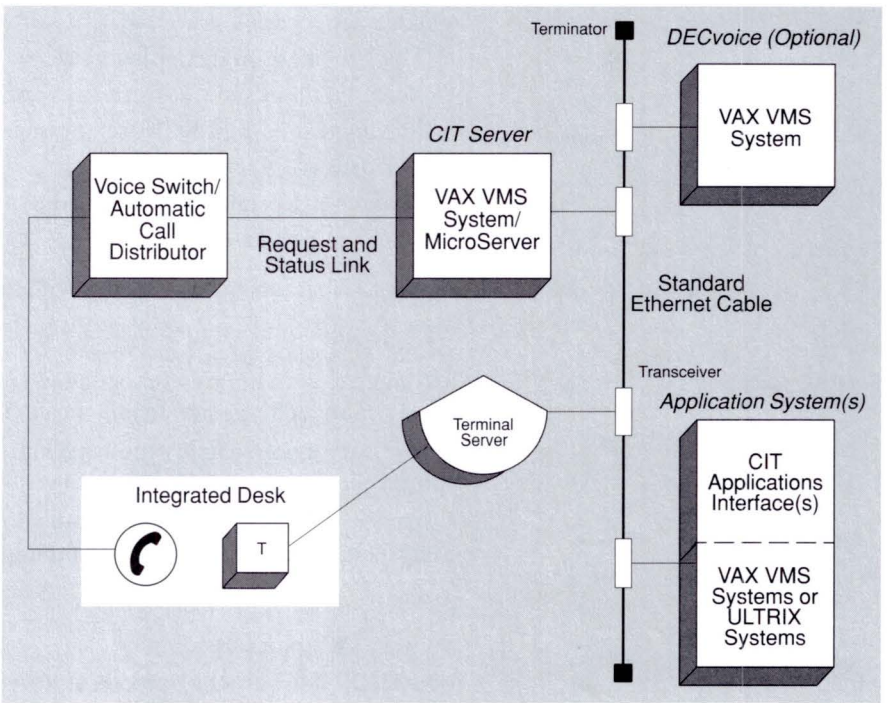

TBG-169–00

VOICEmail for VAX VMS Systems

VOICEmail, produced by VOICEsoft of Rocklin, CA, provides a strategic solution for voice mail and call processing using VAX VMS systems. VOICEmail handles voice messages like any other data type. The VOICEmail software has unique features and is designed to take advantage of Digital's current capabilities and key strategic directions, including ALL–IN–1 Phase II, the CDA architecture, Enterprise Networking based on Network Application Support (NAS), and Computer Integrated Telephony (CIT).

Features

- Is a complete voice mail and voice processing system. It provides voice file folders in the user's account.
- Provides selective receipt and review of messages. Message notification tools include paging and message forwarding to any phone.

- Integrates with all models of PBX systems. Integration includes direct connection to personal greetings, message waiting indication at the user's phone, and the ability to reach the operator. Integration methods include CIT.
- Is compatible with Digital's Office Information management. Both voice and data applications can be managed on one computer platform (VAX) rather than installing proprietary point solution products.
- Is built with a client server architecture. User files, voice files, and telephone linkage operate as services; VOICEmail and other applications operate as clients to these server functions. This client-server design allows the capability to distribute VOICEmail on a VAX network.
- Is a layered application in a VAX network. The voice messages can be managed along with other information in the enterprise. Voice messages can be stored, archived, and moved throughout the network. Any other applications running on the network can have access to the services of the VOICEmail product.
- Operation and maintenance of the VOICEmail system is compatible with existing VAX operations and does not require additional training, planning, and support.

Prerequisite Software

VOICEmail operates on VMS in VAX 4000, 3000, and MicroVAX II systems configured with DECvoice.

The trouble with paperwork is that it does not work well enough. It is a problem of flow; paperwork inevitably clogs its own pipelines. When that happens in your organization, it is time to turn to Digital's Electronic Data Interchange solution. EDI is the electronic exchange of structured business data — such as purchase orders, invoices, and shipping notices — between an enterprise and its trading partners: customers, suppliers, and subsidiaries.

Digital's EDI solution includes: EDI software (DEC/EDI), system integration tools, EDI-ready business applications, and a broad range of services to assist customers in implementing and maintaining an EDI system.

DEC/EDI

Digital's Electronic Data Interchange solutions increase the speed and accuracy of business transactions with your trading partners, customers, suppliers, and subsidiaries.

Features

- Streamlines business practices.
- Improves customer responsiveness.
- Reduces cycle times.
- Increases cost-effectiveness.

DEC/EDI Software

Digital offers DEC/EDI, the most comprehensive client/server-based EDI software available. DEC/EDI consists of three software components: DEC/EDI Application Server, DEC/EDI Translation Server, and DEC/EDI Communications Server. The DEC/EDI architecture enables you to distribute individual servers as needed around your organization rather than having to purchase the entire product each time your EDI business expands. This is illustrated in the *DEC/EDI Sample Solution* figure on the following page.

Extensive communications options give you the capability to connect with trading partners through EDI Value Added Networks (VANs) and directly using Open Systems Interconnect (OSI) protocols. DEC/EDI software supports international communications standards such as the International Standards Organizations OSI, CCITT's X.25, and X.400.

DEC/EDI software also supports national and international EDI standards such as ANSI X12, TDCC, EDIFACT, TRADACOM, and ODETTE. If your business requires adherence to industry-specific adaptations of standards, DEC/EDI provides the capability to support message format standards such as AIAG, WINS, CIDX, EIDX, and many others.

EDI-Ready Business Applications

Digital is actively working with leading software vendors to assist them in bringing to market "EDI-ready" business applications. Areas for which DEC/EDI-ready business applications are available include: Finance/Accounting, Purchasing, Publishing, Manufacturing/MRP, Telecommunications, Distribution/ Logistics, Retail, and Health Care. What this means to you is that Digital can assist in choosing a solution already proven to meet the electronic trading needs of the 90s.

DEC/EDI Sample Solution

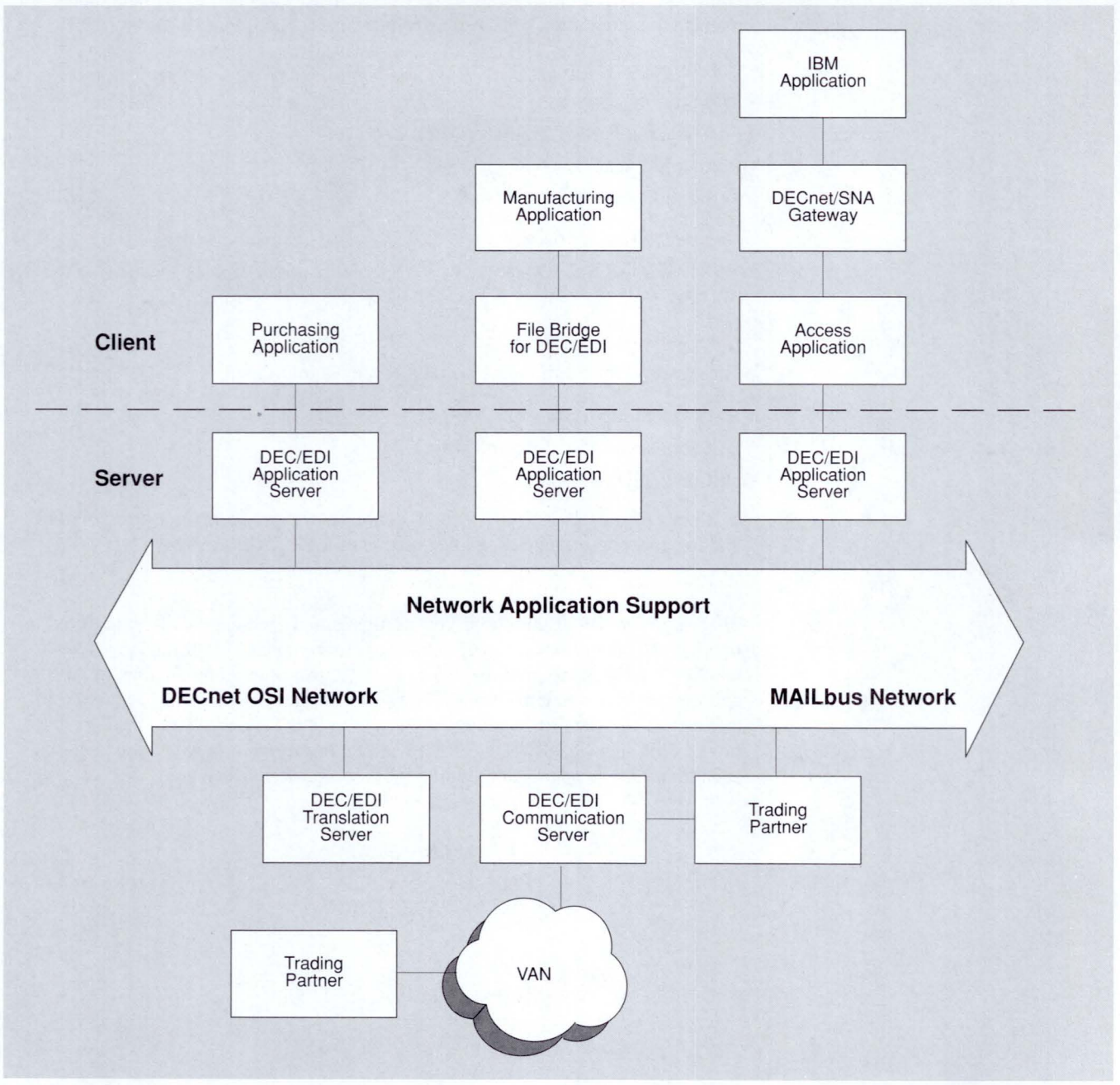

TBG-186–00

Digital Helps from Start to Finish

Digital provides a broad range of services to help you plan, implement, and manage the integration of EDI into your business operations, including:

- Consulting services
- EDI Start-up Services
- First Trading Partner Implementation Services
- Rollout Services
- System Integration Services

Prerequisite Hardware

VAX, MicroVAX, VAXstation, or VAXserver configuration as specified in the SPD 31.70.01-x.

Prerequisite Software

For systems using terminals (No DECwindows Interface):

- VMS Operating System V5.2 or later
- DECforms Run-time System (SPD 29.90.xx)
- DECnet (SPD 25.03.xx)

▲ Refer to the SPD 31.70.01-x for availability of prerequisite/optional software and for information regarding components of VMS DECwindows.

FileBridge for DEC/EDI

Filebridge for DEC/EDI allows you to substantially reduce the effort required to integrate EDI solutions into your business environment. Filebridge provides a table-driven "mapper" that maps data from your business applications to the appropriate EDI standard format. The software handles variations required by differences in standards, version levels, and unique trading partner implementations. This significantly reduces the need to modify your business applications each time EDI standards and trading partner relationships change.

Overview

In order to remain competitive or to accomplish more with fewer resources, organizations are recognizing the importance of improving an individual's access to and ability to share information. Organizations also are recognizing the need to collaborate as cross-functional teams. This requires establishing a messaging utility to facilitate information access and sharing in a multivendor environment.

A solution for this multivendor networking environment is provided by the CCITT X.400 Recommendations, an international standard for electronic message handling systems. The International Telegraphy and Telephony Consultative Committee (CCITT) creates internationally recognized Recommendations that are used worldwide. Any message handling system that complies with these Recommendations can communicate with all other message handling systems that comply with the same Recommendations. Digital's MAILbus complies with the X.400 Recommendations and therefore provides the capability to communicate and exchange messages in this diverse heterogeneous environment.

In accordance with its continuing commitment to open systems, Digital now offers an X.400 MAIL product for ULTRIX in addition to its VMS-based products.

The following sections discuss:

- Digital's implementation of the X.400 Recommendations
- MAILbus products
- MAILbus Integration Services products
- The Enterprise Messaging Server
- User Agent products
- ULTRIX product set

▲ Refer to Appendix A for information about capacity requirements for the Enterprise Messaging Server with the QUICKSTEP Configuration Tool.

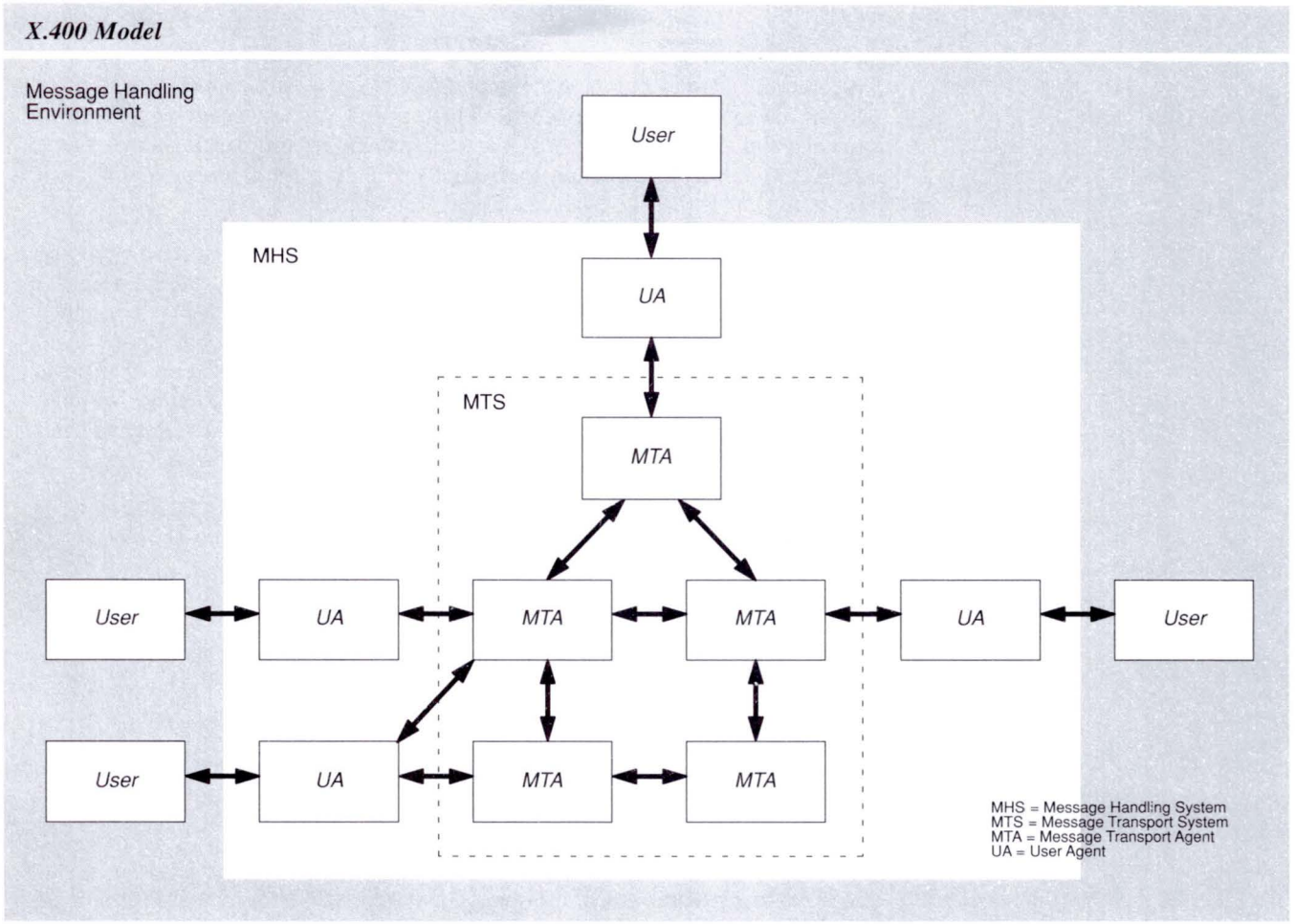

TBG-088-00

X.400 Model

The X.400 model for message handling systems identifies two components that are in all message handling systems: the Message Transfer Agent (MTA) and the User Agent (UA).

The MTA is the part of the message handling system that transfers messages from one place to another. A group of connected Message Transfer Agents forms a Message Transfer System (MTS). A message is transferred from MTA to MTA across the network from its start to its destination. Message Router, the base component of MAILbus, is Digital's MTA.

The User Agent is the part of the message handling system that people use to send and receive messages. ALL-IN-1 Electronic Messaging is Digital's most widely used User Agent.

When a user sends a message, the User Agent passes the message to the MTA using a protocol that both the User Agent and the MTA understand. The MTA passes the message to the next MTA using a protocol that both MTAs understand. When the message reaches its destination, the MTA passes it to the User Agent, again using a protocol that both the MTA and the User Agent understand.

Digital's Implementation of X.400 Model

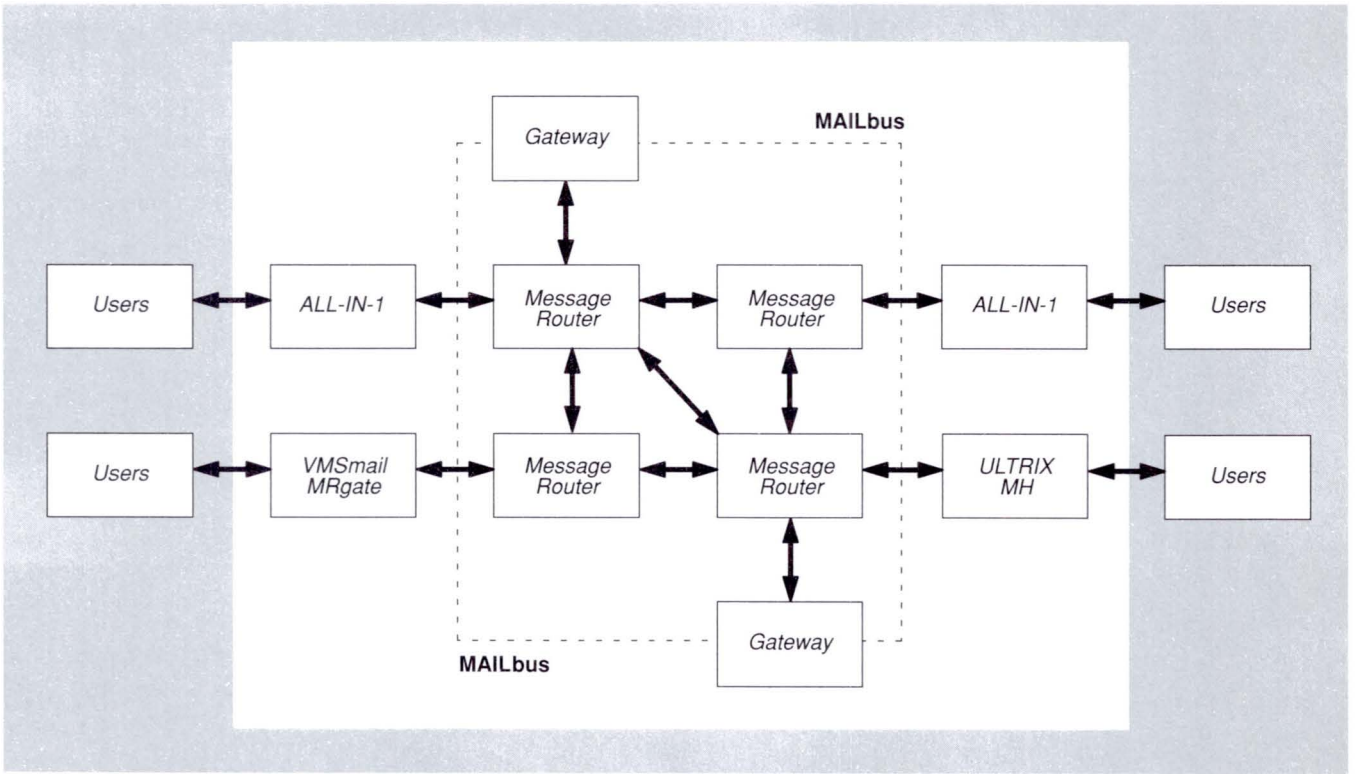

TBG-089-00

Digital's Implementation of the X.400 Recommendations

Digital's implementation of the X.400 model is precisely the same but includes some minor enhancements. Digital's Message Transfer Agent is called Message Router. Digital also recognized the need to exchange messages with proprietary networks. To facilitate message exchange with non-X.400 networks, a gateway function has been provided. In addition, an Application Programmer Interface (API) called the Message Router Programmer's Kit is available to provide the capability to write custom User Agents and gateways between the VAX Message Router and any messaging system or application.

MAILbus

MAILbus — the base of Digital's Electronic Messaging system — provides electronic mail and messaging services that allow users and application programs to exchange mail or messages in a multivendor environment.

MAILbus is a set of application software that links multivendor electronic mail systems and messaging applications into an enterprise-wide electronic messaging system. MAILbus provides the ability to tie mail systems together in a corporate-wide electronic mail backbone, and enables electronic mail exchange with public and private electronic mail systems.

MAILbus is Digital's Message Transfer Service and consists of:

- VAX Message Router
- VAX Message Router X.400 Gateway (MRX)
- VAX Message Router VMSmail Gateway (MRGATE)
- ULTRIX Mail Connection
- VAX Message Router/S Gateway (for IBM SNADS)
- VAX Message Router/P Gateway (for IBM PROFS)
- VAX Message Router Programmer's Kit (API)
- Retix OpenServer 400

MAILbus Integration Services are recommended for planning, designing, and implementing this product set. ▲ Refer to "MAILbus Integration Services," discussed later in this section, for more information.

Digital's Electronic Messaging Components

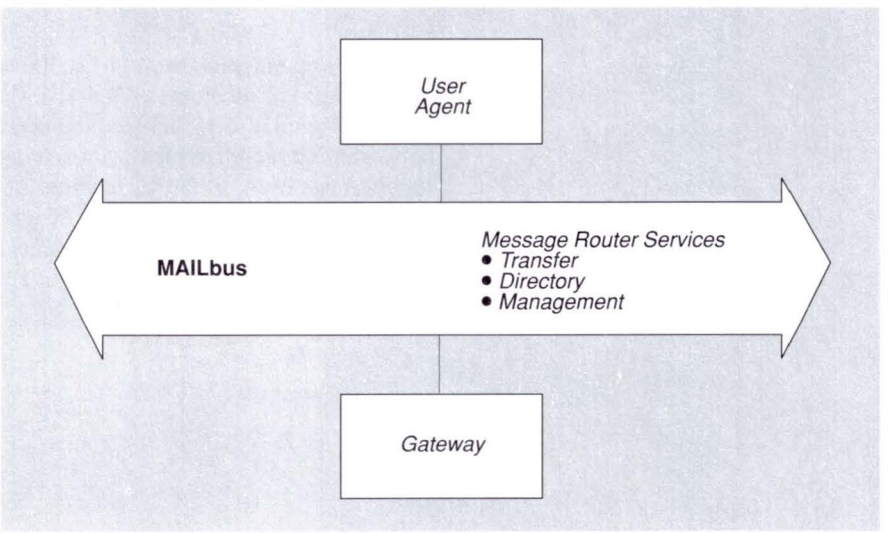

TBG-090-00

VAX Message Router

The base of Digital's MAILbus, or message handling system, is the Message Router. It is a layered VMS application that provides a store-and-forward messaging service, and provides the ability to transfer messages across the mail network. Messages can consist of any information including text, data, and arbitrary files, that need to be transferred within a network. In addition, Message Router can also maintain a list of the users in the mail system so that each user can be identified.

Message Router comprises three services: a transfer, a directory, and a management service.

Message Transfer Service

The VAX Message Router provides a reliable store-and-forward transfer service for messages through a DECnet network. These messages can contain any information needing transport within a DECnet network, and can include text, data, and arbitrary files. The structure of the messages conforms to the format specified by the CCITT X.400 Recommendations for Message Handling Systems. Message headers are constructed with fields defined by the National Institute of Standards and Technologies (NIST — formerly the National Bureau of Standards or NBS), Specification for the Message Format for Computer-Based Messaging Systems.

In addition to the Message Router, User Agents (application programs such as Digital's MAILworks and ALL-IN-1 Integrated Office System) are required for an originator to create a message or for a recipient to read a message when it is delivered. MAILbus Gateways connecting to other vendor's messaging systems or to public messaging networks can also be sources or destinations for messages. Organizations may develop their own applications (using the VAX Message Router Programmer's Kit) to send and receive messages through the Message Router.

The Message Router provides full support for delivery notification services and transmission of service and status messages. Network managers may establish routing schemes for messages by relying on default DECnet configurations, destination routing using route tables, or area routing for large, complex networks involving interconnected hub nodes for each area.

Directory Service

The Message Router contains the MAILbus Directory Service (DDS). DDS is a single logical directory of subscribers and other MAILbus network information that can be distributed across a number of Message Router systems. End users, through their user agents, may make inquiries of the directory to find the address of their correspondents. Most MAILbus gateways use DDS for address translation for message originators and/or recipients in other vendors' messaging networks or external networks. DDS has utilities to allow replication and automatic update of directory information across the Message Router nodes in a MAILbus network.

DDS will optimally support a population of up to 20,000 subscribers and/or 30 Message Router nodes. Consulting services from Digital are available to assist in directory service design and implementation. These consulting services are recommended where network population exceeds these numbers or is subject to frequent changes.

Management Service

The Message Router Management Service monitors the mail network for error and exception conditions and helps with routine management of the Message Router. Error and exception reports may be delivered to the Message Router network manager as events happen and/or on a scheduled basis. Management Action Procedures recommend corrective procedures for specific conditions. For complex networks, use of the MAILbus monitor, available from DIgital's services organization, is recommended to assist in the management of the messaging network.

User Agents and Gateways

Electronic mail User Agents, such as the ALL-IN-1 family, attach directly to MAILbus to access network store-and-forward and directory services. Other User Agents, such as VMSmail and PC Mail, attach to MAILbus through Gateway products. Additional gateway products are available that provide the ability to exchange mail with UNIX System V, IBM SNADS, and IBM PROFS. Custom gateways to other popular mail systems are also available. An additional product, the Message Router X.400 Gateway, adapts MAILbus to run in a fully-compliant OSI environment.

In order to access the store-and-forward services of Message Router, a User Agent or gateway must perform some or all of the following functions:

- Format and display messages.
- Interact with Message Router to send or receive messages.
- Convert a received message from Message Router format to the application format.
- Convert a sending application format into Message Router format.

Message Router should be installed on any local area network that contains User Agents or gateways. It is a standard component of the ALL-IN-1 family and all mail gateways, and the Message Router Programmer's Kit. ▲ For more information, refer to Software Product Description 26.33.00.

Features

- Used by Mail Agents and gateways to exchange messages in a Digital-only or multivendor environment.
- Logs the progress of messages and informs the sending application if not deliverable. Messages that cannot be immediately delivered are retained in a Message Router node until they can be forwarded. (The system manager controls the number and frequency of retries before the Message Router returns a message to the sender as undeliverable.)
- May be installed in selected VMS nodes along a routing path to store messages that may, for example, be retained for transmission at off-peak hours (maximizing transmission resources), or logged into a central, record-keeping node for accounting or statistical analysis.
- May be used by any application adhering to Message Router or X.400 Protocols that needs to transfer data in a multivendor environment.
- Used by mail gateways to convert message addresses between their MAILbus form and the form used in the foreign mail systems.

- Contains application-management services for automated system management, including exception reporting and Management Action Procedures (MAPs), which allow an organization to significantly reduce mail network-management.
- Provides a procedure to configure a simplified, low-management network with the ability to easily reconfigure the network to allow for expansion.

Availability

The VAX Message Router is available as a separate package for installation with customer-written Message Router applications. Also, it may be installed on selected VMS nodes along a routing path, wherever there is a need to store and log messages in transit. This allows for a centrally managed message transfer service.

Prerequisite Hardware

- Any valid VAX, MicroVAX, or VAXstation system configuration that supports the DECnet Phase IV network

Prerequisite Software

- VMS operating system or MicroVMS V5.4
- DECnet VAX V5.4

Ordering Information

▲ Use the software order code template in Section 5 when building an order code number from the software's Unique Product Identifier (UPI). Refer to the Software Product Description (SPD), or consult your local sales representative to determine whether the software application ordered is supported by the processor for which it is intended.

- Software Product Description 26.33.00
- Unique Product Identifier 732

VAX Message Router X.400 Gateway (MRX)

VAX Message Router X.400 Gateway (MRX) is a layered VMS application that provides a communication path between a Message Router-based network and any other message transfer service that conforms to the 1984 CCITT X.400 Recommendations for Message Handling Systems. The Message Router X.400 Gateway allows users of mail agents running on Message Router, such as ALL-IN-1, to communicate with X.400 mail systems either in other networks or within the same network.

Message Router supports messages constructed using the encoding defined by the National Bureau of Standards (NBS) Specification for the Message Format for Computer-based Message Systems. The structure of the messages follows the format specified in the CCITT X.400 Recommendations. The Message Router X.400 Gateway converts the messaging protocols between NBS and X.409 encoding.

The Message Router X.400 Gateway (together with Digital's OSI products) provides interconnection between Digital's mail systems and other X.400 systems, which may be within the same network or within private or public X.400 networks, providing full OSI interoperability.

Features

- Conforms to the CCITT X.400 Recommendations as defined in the profiles produced by CEPT (A311), CEN/CENELEC (A3211), and the NBS/X.400 profile.
- Includes Message Router Base and components of the VAX OSI Applications Kernel (OSAK), which includes the transport (VOTS). The Message Router X.400 Gateway can run on any node in the mail network, provided that it is connected to the mail system by Message Router and has access on the same node to Message Router and either VAX P.S.I. or VAX P.S.I. Access for wide area, X.25 communications, or 802.3/Ethernet for local area communications.
- Allows electronic mail to be exchanged with other electronic mail systems or public service providers that support the CCITT X.400 Recommendations.
- Provides for electronic mail and messaging interchange between DECnet networks and other X.400-compliant networks.
- Provides a directory service to translate between Digital addressing and CCITT X.400 Originator/Recipient name forms.
- Support for compound documents.
- Support for Bodypart 12 (ODA/ODIF documents).
- Support for National Institute of Standards and Technologies (NIST) Bodypart 14 (binary files).
- Organizational unit routing.
- Includes management tools to configure and operate the gateway.

Prerequisite Hardware

- Any valid VAX, MicroVAX II, VAXstation II system configuration that supports the DECnet Phase IV network
- A communications device supported by VAX P.S.I. for Packetnet (X.25) communication or a communications device supporting 802.3/Ethernet

Prerequisite Software

- VMS operating system or MicroVMS V5.4. or later
- DECnet VAX, VAX P.S.I. or VAX P.S.I. Access V5.4 (for Packetnet communication)
- Any mail system running on Message Router
- Message Router Base V3.2 or later (shipped with the Message Router X.400 Gateway)

Ordering Information

Use the software order code template in Section 5 when building an order code number from the software's Unique Product Identifier (UPI). ▲ Refer to the Software Product Description (SPD), or consult your local sales representative to determine whether the software application ordered is supported by the processor for which it is intended.

- Software Product Description 27.50.00
- Unique Product Identifier VDM

VAX Message Router VMSmail Gateway (MRGATE)

The VAX Message Router VMSmail Gateway (MRGATE), available as a separate layered product, provides an interface between the MAILbus Message Transfer Service and the VMS Personal Mail Utility. MRGATE provides conversion between the NIST protocols of the Message Router and the MAIL-11 protocols of VMS mail. Address conversion is accomplished through the use of an extended address syntax without reference to the DDS Directory Service.

Limited documentation content conversion is performed on messages passing from the Message Router to VMSmail. WPS-PLUS and DECdx formatted documents are converted to ASCII text format. Any other file type is passed through MRGATE unconverted. If a message contains multiple text attachments, these attachments are concatenated into a single ASCII text message for onward transmission through VMSmail. If the message contains unlike attachments, a set of predefined rules determines which attachments are forwarded to VMSmail and which are dropped, since VMSmail does not support multiple content types in a single message. Only text message transfer is supported when the message recipient's system is running the VMSmail Personal Mail Utility of the VMS operating system, Version 5.1 or earlier.

No content conversion is performed on messages passing from VMSmail to the Message Router.

In order to provide connection to the MAILbus, the VAX Message Router software is required by, and is included with, the software license and media kit for the VAX Message Router VMSmail Gateway.

Features

- Allows VMSmail and PC Mail users to exchange messages using Message Router store-and-forward management, thus ensuring guaranteed delivery.
- Allows VMSmail and PC Mail users to exchange messages with users of other mail agents on the MAILbus.
- Allows VMSmail and PC Mail users to exchange messages with the users of mail systems supplied by other vendors by means of gateways such as the VAX Message Router X.400 Gateway, Message Router/S Gateway, or Message Router/P Gateway.
- Converts incoming Digital Document Exchange (DX) format and WPS-PLUS documents into ASCII before delivering them to the VMSmail user.
- Limited Digital Document Interchange Format (DDIF) support (one DDIF or ASCII bodypart not converted to VMSmail).
- Additional addressing information (configurable).
- Includes management tools to configure and operate the gateway.

Prerequisite Hardware

- Any valid VAX, MicroVAX, or VAXstation system configuration that supports the DECnet Phase IV network

Prerequisite Software

- VMS operating system or MicroVMS V5.4
- DECnet VAX V5.4

Ordering Information

Use the software order code template in Section 5 when building an order code number from the software's Unique Product Identifier (UPI). ▲ Refer to the Software Product Description (SPD), or consult your local sales representative to determine whether the software application ordered is supported by the processor for which it is intended.

- Software Description 26.33.00
- Unique Product Identifier 730

ULTRIX Mail Connection

The ULTRIX Mail Connection, an electronic mail product layered on ULTRIX, provides high-performance, direct access to the VMS Message Router and thus to the MAILbus domain and all its gateways and User Agents. Users on ULTRIX and systems based on the UNIX operating system can use the ULTRIX Mail Connection as an exchange gateway between any of their UNIX based systems and MAILbus, enabling effective, simple mail communication between UNIX based systems and MAILbus-based systems.

The product allows ULTRIX users and users of the UNIX operating system to exchange mail messages with VMS based users (such as MAILworks and VMSmail users), IBM users (by means of Message Router/P and Message Router/S gateways), and X.400-based users (by means of Message Router/X.400 gateway). In addition to the gateway, the ULTRIX Mail Connection provides an enhanced mail User Agent.

Note that the ULTRIX Mail Connection gateway handles ASCII text: incoming mail messages with non-ASCII body parts, such as WPS-PLUS documents, cause a delivery message to be sent to the ULTRIX recipient with a brief description of the type of message and the sender's name/address, allowing users to make other arrangements.

Features

- Acts as a gateway between systems based on the UNIX operating system and MAILbus by providing connectivity between UNIX operating system-based mail and MAILbus.
- Allows ULTRIX users to exchange mail with MAILworks, VMSmail, and PC Mail users, as well as access X.400, IBM/PROFS, and IBM/SNADS gateways.

Prerequisite Hardware

- For ULTRIX, in addition to the minimum ULTRIX hardware requirements for the prerequisite ULTRIX and DECnet software, ULTRIX Mail Connection requires a minimum of 5 MB of disk space allocated permanently.
- For VMS, in addition to the minimum hardware requirements for the prerequisite VMS and Message Router software, ULTRIX Mail Connection requires 1,000 blocks (512 KB) of disk space allocated permanently.

Prerequisite Software

For the ULTRIX system:

- ULTRIX V2.2 or later, or ULTRIX Worksystem software V1.1 or later
- DECnet ULTRIX V2.2 or later

For the VMS system:

- VMS operating system V4.6, V4.7, or V5.0; or MicroVMS V4.6 or V4.7
- Message Router V3.0 or V3.1
- DECnet VAX V4.6, V4.7, or V5.0

Ordering Information

Use the software order code template in Section 5 when building an order code number from the software's Unique Product Identifier (UPI). ▲ Refer to the Software Product Description (SPD), or consult your local sales representative to determine whether the software application ordered is supported by the processor for which it is intended.

- Software Product Description 29.05.00
- Unique Product Identifier VFG

VAX Message Router/S Gateway (MR/S) for IBM SNADS

Message Router/S (MR/S) Gateway is a layered VMS application that allows the transparent exchange of electronic mail, messages, revisable- and final-format documents, MS-DOS files, and binary files between the users of Digital and IBM DISOSS networks. The Message Router/S Gateway links IBM systems into a multivendor office network using an international standard X.400.

The IBM DISOSS/370 contains the mainframe implementation of Systems Network Architecture Distribution Services (SNADS). IBM System 36 and 38, and IBM 5520 also support SNADS, with the connection between DECnet and SNA networks through an IBM mainframe. From the Digital office network, WPS-PLUS, ASCII, and Digital Document Exchange (DX) documents and messages are converted to DCA-revisable format for transmission to SNADS systems. Documents and messages in DCA format received by the Message Router/S Gateway from the SNADS environment are converted to the Digital DX document format for delivery within the MAILbus network. MS-DOS files are transferred with no conversion in either direction.

The Message Router/S Gateway need be installed on only one VAX/VMS system in the Digital network, where it serves all MAILbus network systems that send or receive messages to or from the SNADS environment. The Message Router Base must be installed on the same system as the Message Router/S Gateway.

Features

- Allows users in the IBM SNADS environment to communicate with any other Message Router User Agent or Gateway on the MAILbus network (once the appropriate entries are made in the MAILbus Distributed Directory Services).
- Mail senders only need to know the recipient's address. IBM users address Digital users following the conventions of the SNADS environment; Digital users address IBM users following the conventions of the Digital environment.
- CDA support and DCA/DCF passthrough.
- Ability to send messages to IBM without having senders registered on DDS.
- DDS lookup of Digital recipients on a distribution list of Notes to SNADS and PROFS enables an IBM recipient to reply to both IBM and other recipients on the distribution list.
- Support for MAILworks style of bodypart attachments.

- Supports the integration of IBM 8100 DOSF, MRS, and MRX.
- Enhanced error handling and recovery.
- Digital and IBM users can be included in the same message address or distribution list.
- Delivery confirmation and nondelivery notification messages are supported.

▲ For more information about general Message Router capabilities, refer to "VAX Message Router" in this section.

Prerequisite Hardware

- Any valid VAX, MicroVAX, or VAXstation system that supports the DECnet Phase IV network
- A properly configured DECnet/SNA Gateway system (▲ Refer to Software Product Description 30.15.00 for specific requirements.)

Prerequisite Software

- VMS operating system or MicroVMS operating system, V5.3 or later (MicroVMS requires both Extended Base and Program Development components)
- DECnet VAX V5.4 or later
- Message Router Base V3.2 or later (shipped with the MR/S Gateway)
- DECnet/SNA VMS APPC/LU6.2 Programming Interface V2.3

Ordering Information

Use the software order code template in Section 5 when building an order code number from the software's Unique Product Identifier (UPI). ▲ Refer to the Software Product Description (SPD), or consult your local sales representative to determine whether the software application ordered is supported by the processor for which it is intended.

- Software Product Description 29.24.00
- Unique Product Identifier VDU

VAX Message Router/P Gateway (MR/P) for IBM PROFS

Message Router/P (MR/P) Gateway is a layered VMS application that allows the transparent exchange of electronic mail, messages, revisable- and final-form documents, MS-DOS files, and binary files between users in a DECnet environment and users in an IBM Professional Office System (PROFS) or Conversational Monitor System (CMS) in an SNA environment. Digital and IBM users employ standard methods to prepare and send documents and messages. MR/P converts mail messages and documents from either environment and forwards them in a format appropriate to the recipient. MR/P can send mail messages and documents from PROFS users to users in the MAILbus network, SNADS network (by means of the Message Router/S gateway), and X.400 network (by means of Message Router X.400 gateway). Communications between DECnet and IBM SNA environments is through a DECnet SNA gateway.

The Message Router/P Gateway needs be installed on only one VAX VMS system in the MAILbus network, where it serves all MAILbus network systems that send or receive messages to or from the PROFS or CMS environment. The Message Router Base must be installed on the same system as the Message Router/P Gateway.

Features

- Allows IBM PROFS or VM CMS users to communicate with any Message Router User Agent or Gateway on the MAILbus network, once the appropriate entries are made in the Digital Distributed Directory Service.
- Mail senders only need to know the recipient's address. PROFS users address Digital users as they would other PROFS users; Digital users address PROFS users as they would other Digital users.
- Digital and IBM users can be included in the same message address or distribution list.
- CDA architecture support and Document Content Architecture/Document Composition Facility (DCA/DCF) passthrough.
- Ability to send to IBM systems without having senders registered on DDS.
- DDS lookup of Digital recipients on a distribution list of Notes to SNADS and PROFS enables an IBM recipient to be able to reply to both IBM and other recipients on a distribution list.
- Support for MAILworks type of bodypart attachments.
- Support for PROFS extended mail.
- MRP DCF draft support.
- Support for all three PROFS data formats (United Sates, Europe, and International).
- Can receive Conversational Monitor System (CMS) notes from IBM.
- Enhanced error handling and recovery.
- Delivery confirmation and nondelivery notification messages are supported.
- For more information about other Message Router capabilities, refer to "VAX Message Router" in this section.

Prerequisite Hardware

- Any valid VAX, MicroVAX, or VAXstation system that supports the DECnet Phase IV network
- A properly configured DECnet/SNA Gateway system (▲ Refer to Software Product Description 30.15.00 for specific requirements.)

Prerequisite Software

- VMS operating system or MicroVMS operating system V4.4 or later (Micro VMS requires both Extended Base and Program Development components)
- DECnet VAX V4.4 or later
- Message Router Base V3.2 or later (shipped with the MR/S Gateway)
- DECnet SNA VMS API V2.3

Ordering Information

Use the software order code template in Section 5 when building an order code number from the software's Unique Product Identifier (UPI). ▲ Refer to the Software Product Description (SPD), or consult your local sales representative to determine whether the software application ordered is supported by the processor for which it is intended.

- Software Product Description 28.94.00
- Unique Product Identifier VCG

VAX Message Router Programmer's Kit (MRIF)

The VAX Message Router Programmer's Kit (MRIF), available as a separate product, consists of a run-time library of high-level interface routines that may be built into user applications and a Programming Guide to assist in writing those applications. This material simplifies the development of the application program modules that assemble and disassemble messages, post and fetch messages from the Message Router, and handle messaging service elements.

MRIF is required only for application development. The applications developed using MRIF may be run on any MR system without MRIF being installed on that system; MR itself contains the necessary run-time libraries.

The Message Router Programmer's Kit contains the Message Router Base and a run-time library of high-level interface routines that can be invoked from a user application.

Features

- Record Management Services (RMS)/FFIF file support.
- Includes documentation to guide the programmer in writing user agents and gateways.

Prerequisite Hardware

- Any valid VAX, MicroVAX, or VAXstation system configuration that supports the DECnet Phase IV network

Prerequisite Software

- VMS or MicroVMS operating system V4.4 or later
- DECnet VAX

Ordering Information

Use the software order code template in Section 5 when building an order code number from the software's Unique Product Identifier (UPI). ▲ Refer to the Software Product Description (SPD), or consult your local sales representative to determine whether the software application ordered is supported by the processor for which it is intended.

- Software Product Description 26.33.00
- Unique Product Identifier 733

Retix OpenServer 400

Digital Equipment Corporation and Retix have entered into a distribution agreement. Digital will now be able to sell the Retix OpenServer 400 series of products for personal computer local area network (PC LAN) electronic messaging networks.

OpenServer 400 is a software package that runs on a DOS PC and provides CCITT X.400 services to PC LAN-based electronic mail systems. It allows PC LAN users on various LANs or using a number of common LAN electronic mail packages to communicate with each other, as well as with other X.400-based services, such as Digital's MAILbus and MAILworks offerings.

Retix OpenServer 400 DOS

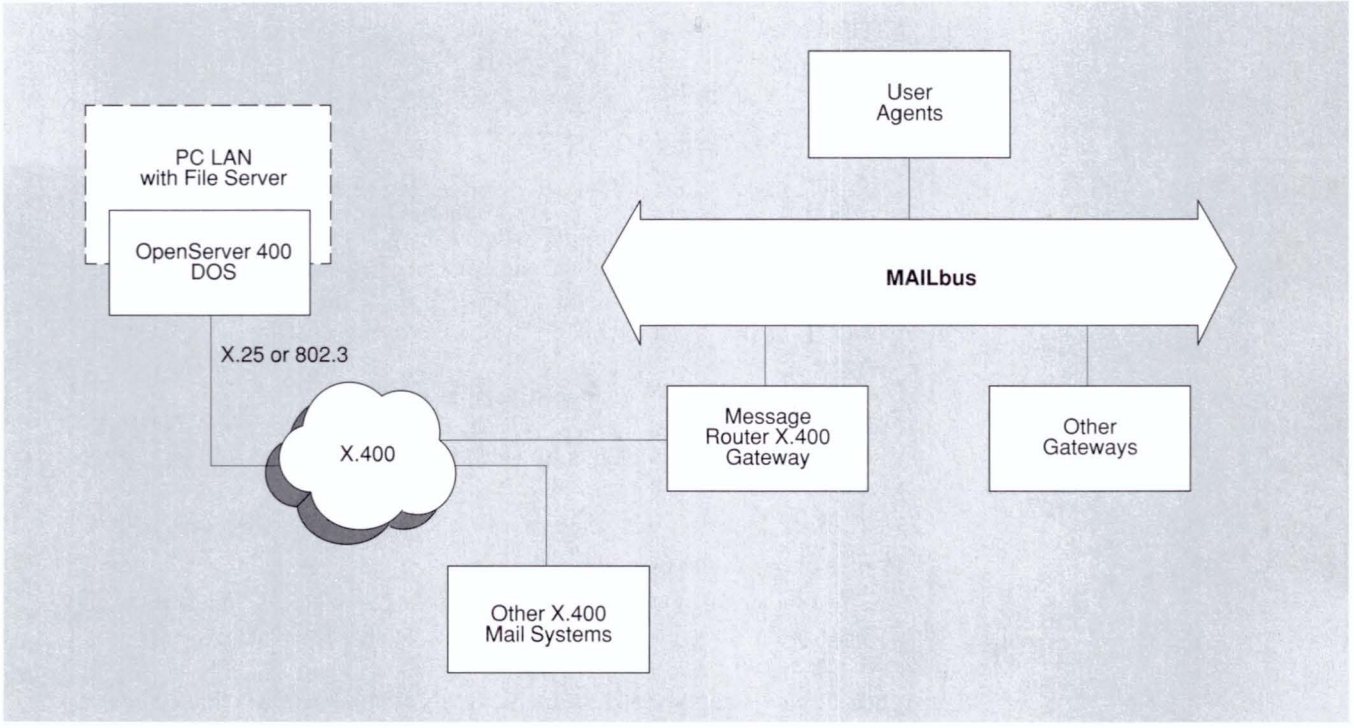

TBG-170–00

Features

- An MS-DOS based Message Transport Agent for PC LAN environments.
- Interconnection among PC LAN mail packages, private mail networks, and public mail networks using a PC-based solution.

  In order to create a complete network solution for our customers and transparently connect the Retix and Digital Message Transport Agents (MTAs) together, Digital recommends the use of the following MAILbus Enterprise Messaging Services:

  - MAILbus Monitor to monitor the status of an OpenServer 400 system
  - MAILbus Synchronizer to synchronize the MAILbus Distributed Directory Service with the electronic mail directory on the LAN

Digital will be able to sell the following products under this agreement:

- OpenServer DOS with Enet Adapter
- OpenServer DOS with X.25 Adapter
- MHS Gateway to X.400

Additional gateways are available through Retix or the appropriate LAN electronic mail vendor.

OpenServer 400 products conform to the following:

- 1984 CCITT X.200, X.224, X.225, X.400, X.409, X.410, X.420
- NIST SP 500-162*
- COS 1.1*
- U.S. GOSIP*
- TOP 3.0*
- CEN/CENELEC ENV41 201*, ENV41 202*
- ISO 7498, ISO 8326, ISO 8327
- EWOS A-311* and EWOS A-3211*

*Subject to restrictions in Retix Conformance statements for these products.

In Digital's role as a systems and network integrator, it has found the Retix OpenServer 400 products to be complementary to our X.400 product strategy. This agreement gives Digital the ability to provide these products directly to our customers as part of an overall electronic messaging solution.

Hardware Requirements

- DECstation 3xx or 4xx, IBM PC/XT/AT, PS/2 Model 30, COMPAQ DESK-PRO 386, or equivalent PC-compatible system required for wide area network access options
- LAN card compatible with chosen PC LAN Network operating system
- Choice of one of the following adapters:
  - X.25 Adapter for Wide Area communication, Retix PC-320 Intelligent Coprocessor, maximum data rate 64 Kb/s/channel (packaged with QB-XDVAD-WA)
  - 802.3 adapter card for 802.3/Ethernet LAN communication which operates independently of LAN card used to access PC LAN electronic mail shared file system (packaged with QB-XDUAD-WA)
- Requires 640 KB of memory.

Prerequisite Software

- DOS Version 3.1 or higher
- Network operating system appropriate for connection to existing PC LAN electronic mail software, such as Novell NetWare for connection to MHS-based mail packages
- Configuration utility requires Microsoft Windows Version 3.0.

Ordering Information

Retix OpenServer 400 Order Codes	
Option	**Order Code**
Retix OpenServer DOS with Enet Adapter	QB-XDUAD-WA
Retix OpenServer 400 DOS with X.25	QB-XDVAD-WS
Retix MHS Gateway to X.400	QB-XDWAD-WA

MAILbus Integration Services

Digital now offers an extended portfolio of MAILbus Integration Services through the Digital Customer Center (DCC). These services help customers to gain the maximum benefit from electronic mail networks. Specialized consultants from Digital's Enterprise Integration Services (EIS) organization help deliver multivendor messaging solutions.

The MAILbus Integration Services facilitate planning, designing, implementing, and supporting electronic message networks based on Digital's MAILbus product set. The available services include:

- DEC MAILworks PostMaster for LANs/WANs — Provides mail services to different PC LANs at the DOS level; provides a gateway into VMS and ALL–IN–1 IOS environments, and other mail systems on the enterprise network.
- MAILbus Planning and Design — Provides assistance in designing a messaging network. This service provides an overall design architecture, identifies system requirements, provides recommendations about directory namespace organization, as well as a workable plan for implementation.
- MAILbus Installation and Configuration — Provides installation and configuration of products required to bring a specific messaging site on line. This service includes an orientation for local operations personnel to help them administer and maintain the installed MAILbus products.
- Enterprise Messaging Services — A portfolio of services (a software component combined with consulting services) that provides advanced capabilities that large messaging networks need. The portfolio includes:
  - MAILbus Data Collector, which provides a tool to collect information about messages in the network. This component creates a data file that can be used to generate accounting reports or billing and chargeback information.
  - MAILbus Directory Registrar, which provides a message-based application to allow users to request automatic registration or update to their own directory entry. This capability frees the administrator from a potentially time-consuming task.
  - MAILbus DDS Rapid Replicator, which gives the Messaging Manager a tool to deploy a large World Search Directory Node quickly.
  - MAILbus Monitor, which helps system administrators to identify and resolve potential problems before they become critical. The MAILbus Monitor provides a real-time graphic display screen showing the operational status of all key MAILbus components network-wide, from a single location by a single operator.
  - MAILbus Directory Synchronizer, which is a set of management utility procedures that, when tailored, enable exchange and synchronization of directory information in a multivendor electronic mail network.
  - MAILbus Directory Query, which enables user to use electronic mail to retrieve directory information.

The following information provides more detail about the currently available MAILbus Integration Services. In addition, Digital continues to enhance its portfolio of Electronic Messaging services. Contact your local Digital sales representative for more specific information.

DEC MAILworks PostMaster for LANs and WANs

If multivendor PC LANs are proliferating throughout your enterprise, you are probably facing several problems: how to manage PC LAN mail interconnections; how to deliver enterprise-wide mail, directory, and management services to various PC LAN end users; how to maintain performance, security and integrity across multiple mail systems.

The DEC MAILworks PostMaster for LANs helps you to solve these problems by providing mail services to different PC LANs at the DOS level. Also, with the DEC MAILworks PostMaster for WANs, it provides a gateway into your VMS and ALL–IN–1 IOS environments, and other mail systems on your enterprise network.

Features

- Provides mail services within and between multivendor PC LANs, including 3COM 3+, Novell NetWare, Banyan Vines and Digital's PATHWORKS, plus cc:MAIL.
- Connects multiple PC LANs to your enterprise network.
- Measures performance and usage for better mail cost management across a wide area network.

Distributed Services and Applications

Office services made available by the DEC MAILworks PostMaster for LANs include mail within and across PC LANs, directory services, automatic mail notification and address validation, automatic conversion of mail into the user's preferred document format, virus detection, your choice of mail editors, local file cabinet, menu and system customizations, and the ability to tap network applications via mail messages.

The DEC MAILworks PostMaster for LANs is a DOS application that runs on a dedicated DOS PC. It allows you to exchange mail within and across all supported PC LANs — Novell NetWare, 3COM 3+, Banyan Vines, Digital's PATHWORKS and with cc:MAIL users — over both Ethernet and Token Ring using Ethernet, RS-232 hardware, or modem connectivity. In the local environment, no connection to a VAX is required.

As your LAN grows, you may need additional performance to accommodate the increased flow of mail messages. The system manager has the option to assign up to nine "assistant" Postmasters to each "master" Postmaster, or to define whole new LAN branches with a Postmaster and assistants for each branch. Each LAN is physically limited to 99 branches.

DEC MAILworks PostMaster for LANs/WANs Sample Solution

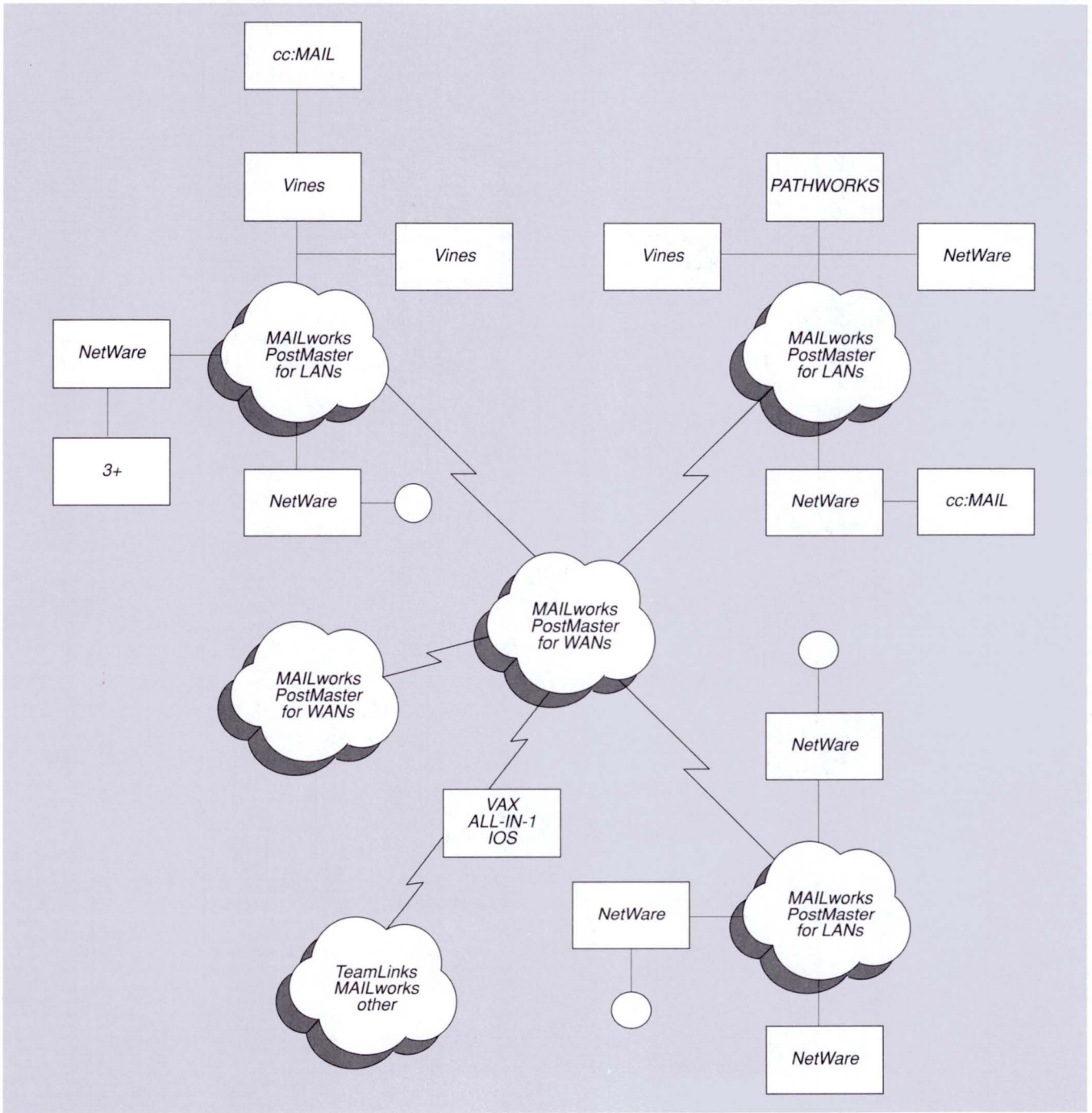

TBG-189-00

DEC MAILworks PostMaster for LANs users currently have two interfaces to choose from: ALL–IN–1 IOS for LANs, that looks and feels like the ALL–IN–1 IOS VT interface; and ALL–IN–1 DESKtop for LANs, that resembles the ALL–IN–1 DESKtop for DOS.

PC Access to the Wide Area Network

If you want to open the enterprise network to your PC users, you also need the DEC MAILworks PostMaster for WANs. This add-on to the DEC MAILworks PostMaster for LANs acts as a gateway to Digital's MAILbus software and the resources of your VAX VMS network. It handles the directories and mail delivery across the WAN, plus mail tracking and accounting for performance and mail cost management. The DEC MAILworks PostMaster for WANs can be installed on the same VMS system with MAILbus software or on another VMS system in the network.

While it gives you greater use of your existing system resources, the DEC MAILworks PostMaster for LANs — in conjunction with the DEC MAILworks PostMaster for WANs — promotes teamwork by improving communications among PC LAN users and tying them into the enterprise network.

Prerequisite Hardware

- DEC MAILworks PostMaster for LANs
  - PC LAN Server: An Intel 80286-based PC or higher, 100 MB disk, 1 MB RAM memory, 3COM EtherLink II 3C503 LAN communication card, or other compatible communications board
  - End-user PC: Intel 80/86-based PC, 20 MB hard disk, 1 MB RAM memory, 3COM EtherLink II 3C503 LAN communication card, or other compatible communications board
- DEC MAILworks PostMaster for WANs

  Any VAX or MicroVAX computer, VAXserver, or VAXstation except the following: MicroVAX I, VAXstation I, and VAXstation 8000

Prerequisite Software

- DEC MAILworks PostMaster for LANs
  - PC LAN Server: MS-DOS V3.3 or higher; PATHWORKS for DOS V3.1 or later if an Ethernet connection is used to the VAX processor
  - End-user PC: MS–DOS V3.3 or higher; one of two clients: ALL–IN–1 DESKtop for LANs, or ALL–IN–1 IOS for LANs
- DEC MAILworks PostMaster for WANs
  - VAX Server: VMS V5.3 or later, DECnet V5.3 or later, Message Router V3.1 and customer-defined gateways; PATHWORKS for VMS V4.0 if Ethernet connection is used between DEC MAILworks PostMaster for LANs and DEC MAILworks PostMaster for WANs

Ordering Information

DEC MAILworks PostMaster Order Codes	
Option	**Order Code**
DEC MAILworks PostMaster for LANs	QL-XTJAW-AA
Media and Documentation	QA-XTJAA-H*
ALL–IN–1 IOS for LANs Interface	QL-XTLAF-2B
ALL–IN–1 DESKtop for LANs Interface	QL-XTMAF-2B
DEC MAILworks PostMaster for WANs	QL-XTKA9-AA
Media and Documentation	QA-XTKAA-H*
* = I for RX31, B for RX24	

MAILbus Planning and Design

MAILbus Planing and Design consulting is a cooperative and comprehensive planning process in which a messaging consultant helps identify and plan the major aspects of your electronic mail network implementation. This service enables customers to make informed decisions on every aspect of their electronic mail network.

Features

- Extensive data gathering sessions with key management and information systems staff personnel. The data is incorporated into a Message Handling System Technology Report. This report is the blueprint for the design and implementation of a multivendor electronic mail network based on Digital's MAILbus product set. It contains:
  - A vision of how to pair technology with stated business and MIS goals.
  - Characterization of service levels, including delivery times, throughput, reliability, security, and growth.
  - A Message Handling System architecture designed to meet the customer's needs.
  - A network map that identifies all major sites, components, locations and end-user services in the Message Handling System.
  - Planning guidelines for implementation of the Message Handling System.
  - Details about Message Handling System directory usage, including approaches to multivendor namespace organization.
  - Information about management and administrative functions required to operate the Message Handling System.
- A Technology Overview Briefing presented at the end of the consultancy. The briefing summarizes the findings of the Message Handling System Technology Report.

Ordering Information

Contact your local Digital sales representative for information.

MAILbus Installation and Configuration

The MAILbus Installation and Configuration service provides installation and configuration of products required to bring a specific messaging site online. This service includes an orientation for local operations personnel to help them administer and maintain the installed MAILbus products.

Ordering Information

Contact your local Digital sales office for more information about this service.

MAILbus Data Collector

The MAILbus Data Collector provides a tool to collect data about messages in a MAILbus network. Each time a MAILbus User Agent or Gateway posts or fetches a mail message from the Message Router on any computer in the MAILbus network, the Message Router collects a journal record of the message. The MAILbus Data Collector opens this journal record and collects the information it needs. This information is written to a file, in a format that the system administrator specifies, and can be used to generate reports or provide statistical input to other applications.

Features

- Collects a comprehensive set of information about each electronic mail message sent or delivered in a MAILbus network.
- Is highly configurable and allows the Messaging Manager to select any or all of 29 different data fields to be collected. The Messaging Manager also controls the order and size of the fields to be collected.
- Produces a flat, fixed-length file that is suitable for use in a spreadsheet or accounting application.
- Fully integrated with the MAILbus Message Router product, including the MAILbus Distributed Directory Service.
- Collects information about messages created or handled by a Digital User Agent, Gateway, or customer-written application that uses the Message Router Programming Interface kit.

A Digital Messaging Consultant:

- Delivers on-site installation, configuration, and demonstration of basic operational functions.
- Provides an on-site orientation session for the operation and management of the MAILbus Data Collector.

Prerequisite Hardware

- Any VAX configuration. The amount of disk space required for this product is determined by the selected options and the frequency at which collected information is gathered or purged from the system.

Prerequisite Software

- The VMS operating system supported by the Message Router V3.1 or later software.

Ordering Information

Contact your local Digital sales representative for information.

MAILbus Directory Registrar

The MAILbus Directory Registrar provides special management tools and procedures to facilitate the management of MAILbus Distributed Directory Services (DDS). The Registrar is a messaging-based application that makes it possible for MAILbus users to create and update their own MAILbus Distributed Directory Services profile according to a predefined template. In addition, a Messaging Manager can use the Registrar to register or request changes on a user's behalf.

To obtain maximum benefit from Digital MAILbus Gateway and User Agent products, each MAILbus user should be assigned a profile entry in the Distributed Directory Services (DDS). This profile contains personal information (such as telephone number and mailstop) and system-provided MAILbus user identifications

The Registrar automates the process of entering and maintaining the profile information by allowing individuals to use their existing electronic mail accounts to register and maintain their profiles. Users complete an easy-to-use online form to add to or update their directory profile in the same manner in which they send an ordinary text mail message

Features

- Allows the Messaging Manager to create a template defining the minimum registration information a user must supply, enforcing corporate addressing standards.
- Organizes the directory namespace, ensuring unique mail addresses are created and maintained. This is critically important when building large messaging networks.
- Allows external partners to register their mail address in DDS, subject to the security checks that the Messaging Manager puts in place.
- Has a denied-parties list that prevents unauthorized user communities from registering in the directory. This allows customers to control the system resources allocated to directory services.

A Digital Messaging Consultant:

- Delivers on-site installation, configuration, and demonstration of basic operational functions.
- Provides an on-site orientation session for the operation and management of the MAILbus Directory Registrar.

Prerequisite Hardware

- Any VAX configuration. The amount of required disk space for normal operations depends on the number of directory entries and the size of each entry.

Prerequisite Software

- The VMS operating system supported by the Message Router V3.1 or later software.

Ordering Information

Contact your local Digital sales representative for information.

MAILbus DDS Rapid Replicator

The MAILbus DDS Rapid Replicator provides a tool to help Messaging Managers build or quickly recover a fully synchronized World Search Directory Node. This service is recommended for organizations whose directory contains 20,000 or more entries.

Features

- Includes specially designed management tools and easy-to-use operations procedures.
- Enables quick loading of a fully synchronized MAILbus World Search Directory Node.
- Supports extremely large centrally-managed MAILbus directories (tested with directories with over 100,000 entries).

A Digital Messaging Consultant:

- Delivers on-site installation, configuration, and demonstration of basic operational functions.
- Provides documented operational procedures, tailored specifically to a customer's environment, that enable rapid implementation of new World Search Directory Nodes or recovery of an existing World Search Directory node.
- Provides an on-site orientation session for the operations and management of the MAILbus DDS Rapid Replicator product.
- Optionally, accompanies MAILbus network administrators to a fully-equipped Digital test lab where they can practice recovery and implementation procedures in a hands-on training environment.

Prerequisite Hardware

- Any VAX configuration. The amount of required disk space for normal operations depends on the number of Directory entries and the size of each entry.

Prerequisite Software

- The VMS operating system supported by the Message Router V3.1 or later software.

Ordering Information

Contact your local Digital sales representative for information.

MAILbus Monitor

The MAILbus Monitor service combines Digital's MAILbus consulting expertise with an integrated application solution, offering monitoring capabilities for:

- Message Router (MR) and the Distributed Directory Services (DDS)
- Message Router VMSmail Gateway (MRGATE)
- Message Router/P (MRP)
- Message Router/S (MRS)
- Message Router X.400 Gateway (MRX)
- ALL-IN-1 User Agent (UA)

The MAILbus Monitor scans one or more of the installed MAILbus components, user agents, or gateways, and records problems affecting message delivery performance. The MAILbus Monitor does not implement solutions to network problems; it detects potential or actual problems and indicates their severity.

Digital offers the MAILbus Monitor as an Enterprise Messaging Service. It is a quality software product, coupled with expert advisory consulting to help customers gain maximum benefit from their MAILbus networks.

The MAILbus Monitor consists of the following components:

- The Scanner, which monitors:
  - Message Transfer Agents (MTAs)
  - User Agents (UAs)
  - MAILbus products, such as MRGATE, MRX, and DDS
- The Server, which collects and stores the data that the Scanner generates.
- The Client, which collects the data from the Servers and displays it on a terminal screen.

Features

- The MAILbus Monitor detects the following types of problems:
  - Message build-up
  - Status disabled, stopped, or suspended
  - Bad message files found
  - Processes not running
  - Logical names not defined
  - Database records not found
  - Files not found
  - Mismatches in the Message Router and VAX Message Router VMSmail
- Online help is included and is available through pull-down menus, if the DECforms product is installed, or through the standard VMS help library.

Prerequisite Hardware

- Any VAX configuration. The amount of required disk space for normal operations depends on the number of Directory entries and the size of each entry.

Prerequisite Software

- The VMS operating system supported by the Message Router V3.1 or later software.

Ordering Information

Contact your local Digital sales office for more information about this service.

MAILbus Directory Synchronizer

The MAILbus Directory Synchronizer (SYNCHRONIZER) is a VMS software application that allows customers to create a true enterprise-wide directory service. SYNCHRONIZER enables the automated exchange of electronic mail directories across multiple platforms. Directories from Mail systems such as IBM PROFS and Office Vision, Microsoft Mail for DOS, cc:Mail, UNIX Sendmail and ALL-IN-1, can be synchronized with the MAILbus Distributed Directory Service (DDS). SYNCHRONIZER allows a messaging manager to control not only the information exchanged, but also how and when directory synchronization occurs.

The Import feature loads DDS with information from virtually any other electronic mail directory, or source of information such as a Human Resources system. Incoming information in various formats can be mapped into DDS by the flexible configuration files. SYNCHRONIZER allows for the initial "bulk load" of directory information, as well as ongoing synchronization maintenance.

The Export feature also uses highly flexible configuration files that permit tailoring of the extracted directory information into a form ready to be used by the receiving directory. It can incorporate an extract of the full directory, a subset of the directory (based on Directory Group ID or X.400 attributes), or only the recent changes. Every extract can be formatted specifically for the target mail system directory.

Synchronizing PC LAN systems becomes straightforward, when you use the SYNCHRONIZER to create a user-friendly nickname stored in DDS along with other description information. This nickname can then be used in PC LAN E-mail "pick" screens to present end-users with friendly addressing.

SYNCHRONIZER is a powerful tool enabling bidirectional synchronization between DDS and virtually any other directory services. This creates a true multivendor enterprise-wide directory service.

Features

- Synchronizes other directories with DDS by using site-specific record descriptor files (RDFs).

  During Import, the RDFs define the mail system directory file and map information into DDS. The imported directory files only need to be sequential files in fixed format.

  During Export, RDFs allow the exported information to be put into the exact format needed by the receiving mail system.

- Tags entries with a unique "Directory Group ID," assigned by the messaging manager, simplify identification, maintenance, and reporting functions. This ID is especially useful with the export feature, allowing the messaging manager to specify which Directory Group entries to extract.
- Stores the "Directory Group ID" (the tag identifying the entry) in one of the DDS fields, USERDEF1 through USERDEF5, configurable by the messaging manager.
- Provides the capability to initially bulk load directory information into DDS, simplifying and reducing the maintenance efforts.
- Automatically generates the MAILbus address and can optionally generate PROFS and SNADS aliases.

- Ensures the integrity of your enterprise directory for all integrated mail systems, performing uniqueness checks on a user's mail and X.400 address.
- Creates a unique, system-wide "nickname" in DDS for each entry. This optional capability now makes incorporating your PC LAN E-mail systems into your enterprise directory service straightforward.
- Permits the messaging manager to supply default values for any field in the RDF. This is useful when all users in a mail directory, or Directory Group ID, have the same department name, for instance.
- Includes Import and Export RDFs to synchronize with Microsoft Mail for DOS, UNIX Sendmail alias table, a remote DDS network (Message Router V3.2), PROFS and OfficeVision import, X.400 (import example) plus ALL-IN-1 IOS, if required. RDFs can be easily created for virtually any directory environment.
- Allows conditional logic to be applied in Import and Export RDFs. This important feature allows a messaging manager to easily manipulate directory information, creating a complete and consistent database of users and their network mail addresses.
- Allows the messaging manager to fully control the exported director information, selecting either the full directory, subsets of the DDS entries by Directory Group ID(s) or X.400 attributes, or "Changes Only," including only the values changed during the synchronization session. This is particularly useful when a user is synchronizing with populations that may not be capable of processing complete (full) directory updates on a regular basis.
- Creates export directory files in a "ready to use" format.
- Supports the DDS fields listed in the User's Guide, including new fields such as COMMON NAME, INTERNAL LOCATION, LANGUAGE PREFERENCE, USER DEF 1–5 and UNIQUE UA ID.
- Synchronizes up to 99 Directory Group ID directory files simultaneously, with no upper limit on the number of Directory Group IDs you can store within DDS.
- Allows SYNCHRONIZER's file names and directory locations to be changed to suit your environment's unique requirements.
- Provides Import transaction logging, with a choice of full logging or condensed logging.
- Provides a Transaction Statistics Summary report at processing completion, listing start- and end-processing times for each Directory Group ID, the total number of transactions processed, and the number of successful adds, modifies, deletes, and rejects.
- Permits invocation of an external command procedure at selected intervals during a SYNCHRONIZER run, and at completion.
- Notifies the messaging manager via electronic mail of the status of SYNCHRONIZER runs and includes the Transaction Statistics Summary.
- Uses the standard Message Router facility MB$CONTROL for start and stop operations.

- As an integral part of the MAILbus Directory Synchronizer service delivery, an Integration Consultant will work with the messaging manager to ensure that all prerequisites are met prior to the on-site installation and configuration of MAILbus Directory Synchronizer and perform on-site installation, configuration, and demonstration of SYNCHRONIZER on a designated node. The consultant will also provide an on-site orientation session on the installation, operation, and management of the SYNCHRONIZER application. Orientation uses sample files provided in the installation kit.

Prerequisite Hardware

Any VAX configuration. The amount of required disk space for normal operation depends on the number of Directory entries and the size of each entry.

Prerequisite Software

- VMS operating system V5.1 or later
- VMS operating system supported by the Message Router V3.2 or later.

Ordering Information

Contact your local Digital sales office for more information about this service.

MAILbus Directory Query

The MAILbus Directory Query is an Enterprise Messaging Service that enables a user to use electronic mail to retrieve directory information. The user mails a simple request to the inquiry facility. The inquiry facility returns the results by means of electronic mail. This capability (similar to Directory Assistance from a telephone operator) may be appropriate in situations where interactive directory access is not possible (for example, with PC LANs or electronic mail packages which have no directory services).

Prerequisite Hardware

- Any VAX configuration. The amount of required disk space for normal operations depends on the number of Directory entries and the size of each entry.

Prerequisite Software

- The VMS operating system supported by the Message Router V3.1 or later software.

Ordering Information

Consult your local Digital sales office for more information about this service offering.

Enterprise Messaging Server

The Enterprise Messaging Server is a combined hardware, software, and messaging services product that provides MAILbus Message Router and Gateway services for mail users on a multivendor, local, or worldwide network. An Enterprise Messaging Server is a node in a mail network that is specifically dedicated to act as the network server for all MAILbus applications in a geographic area. This is analogous to the Message Transfer Agents as defined in the X.400 model for a specific facility or geographic area.

By combining hardware and software with services in one package, Enterprise Messaging Servers reduce installation problems and enable customers to manage improvements or expansion of their mail network in a easy manner. This modular approach of dividing the network into geographic areas and having each area served by a dedicated Enterprise Message Server allows the customer to mix-and-match local systems and plan the enterprise-wide implementation in stages. It also provides the basis for a robust messaging backbone network.

The Enterprise Messaging Server is designed as a server for only MAILbus functions. It is not normally accessed for performing User Agent functions such as ALL-IN-1 Phase II or VMSmail. Mail users access the Enterprise Messaging Server by means of a User Agent through the MAILbus over a network connection. ▲ Refer to Appendix A, "QUICKSTEP," for a description of a configuration tool that assists in estimating the required hardware for an Enterprise Messaging Server.

Features

- A single platform for all of the appropriate MAILbus components for one mail network area that provides:
  - Ease of management
  - Better control
  - Improved security
  - Ease of maintenance
- Includes all Message Router functions, such as:
  - Transport, store-and-forward
  - Distributed Directory Services
  - Management
- Provides World Search node directory.
- Supports EDI; Message Router is a key component to every EDI installation.
- Provides a portfolio of software components and consulting services, called the Enterprise Messaging Services, that complements a large messaging network's needs.

- Enables an optional choice of additional gateways that provide mail interoperability with:
  - Other mail environments such as PROFS, SNADS, and ULTRIX/UNIX
  - Public mail systems such as MCI mail, AT&T mail, and Telex
- Provides a high degree of flexibility by supporting a variety of file formats.

Ordering Information

The Enterprise Messaging Server includes:

- A choice of a VAXserver 3100 or a VAXserver 4000-class platform
- VAX Message Router that provides store-and-forward messaging services.
- VAX Message Router VMSmail Gateway that allows VMSmail users to exchange messages with other MAILbus users.
- VAX Message Router X.400 Gateway that provides a communication path between a Message Router-based network and any other transfer services that conforms to the 1984 CCITT X.400 Recommendations for Message Handling Systems.
- Enterprise Messaging Services, a set of MAILbus Integration services that consist of software products and consulting services. The Enterprise Messaging Services provide the capabilities that a large messaging network needs, including:
  - MAILbus Data Collector
  - MAILbus Directory Registrar
  - MAILbus DDS Rapid Replicator
  - MAILbus Monitor
  - MAILbus Directory Synchronizer
  - MAILbus Directory Query

▲ Refer to "Electronic Messaging — Services" in this section for a description of the Enterprise Messaging Services.

The capacity of the Enterprise Messaging Server may vary depending on the assumptions used in each situation. ▲ Refer to Appendix A, "QUICKSTEP," for information on which to base assessments of the capacity in terms of users to be served, in each particular business situation.

▲ Contact your local Digital sales representative or the Digital Customer Center (DCC) in your area for ordering and other information about the Enterprise Messaging Server.

Overview

The User Agent is an application process that interacts between a user, or an application program, and the Message Transfer System.

Digital recognizes that various users of mail have different needs. People using a network have varying degrees of needs for network services. Some people, or their functions, require simple mail services while others may have a need for a broad spectrum of office integration capabilities.

Recognizing this, Digital has provided a comprehensive suite of User Agent products to choose from:

- Simple mail products
- DEC MAILworks (formerly ALL–IN–1 MAIL)
- ALL–IN–1 Integrated Office System Server for VMS V3.0

DEC MAILworks is a feature-rich electronic mail application that adheres to the international messaging standards set by the CCITT X.400 Recommendations. DEC MAILworks is a client/server application that offers a consistent set of electronic mail services across heterogeneous desktop devices.

Note: The DEC MAILworks product family was formerly named ALL–IN–1 MAIL. The Messaging Program changed the name of the ALL–IN–1 MAIL product set to DEC MAILworks. This change was encouraged by Digital field personnel and customers due to the confusion of ALL–IN–1 MAIL with ALL–IN–1 Integrated Office System. This name change will take place gradually, as new releases of the current product are distributed. New products will be named DEC MAILworks at introduction.

Electronic Messaging Topology

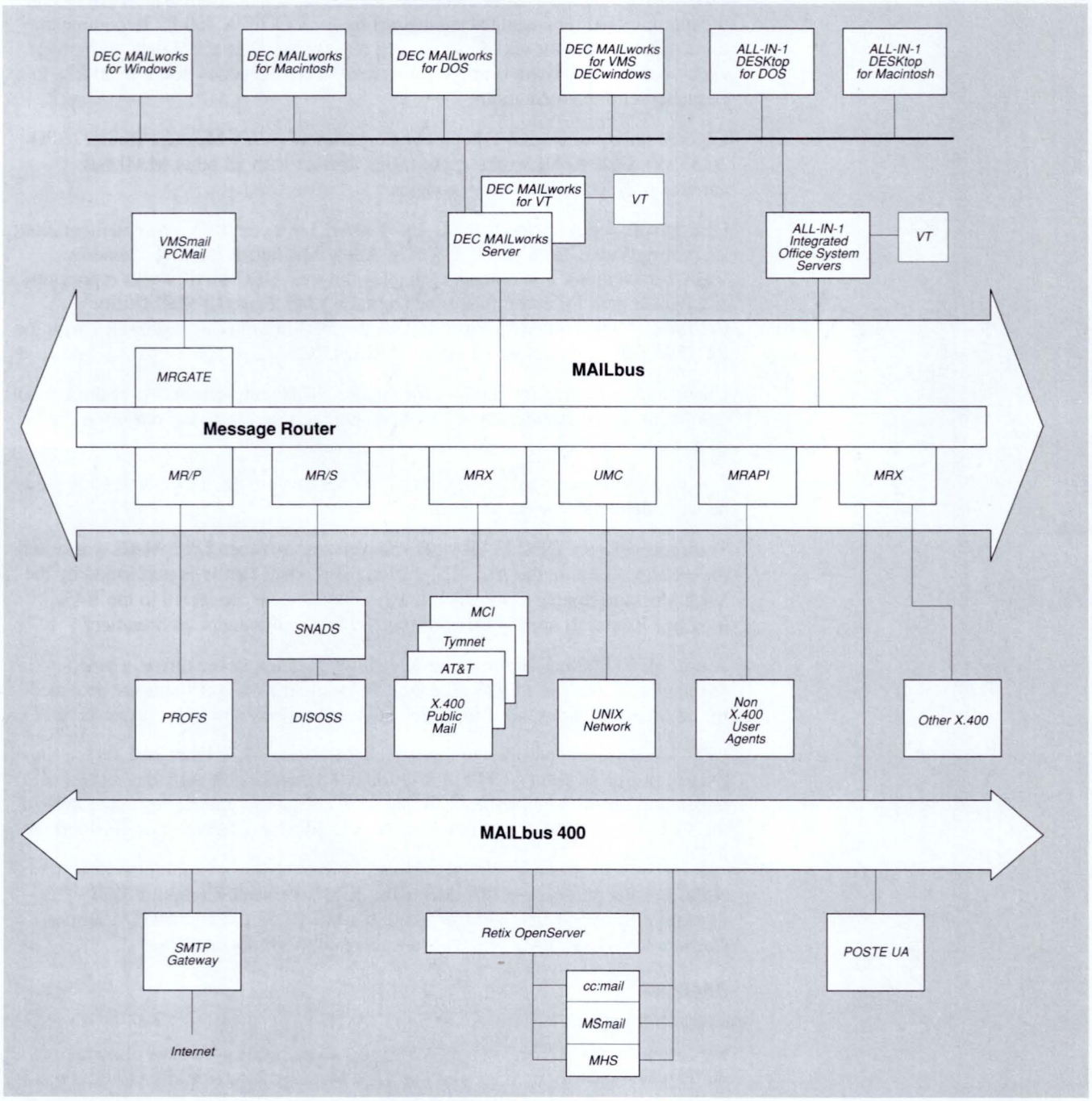

TBG-091-01

Simple Mail

Simple Mail products provide the most elementary of mail service functions only. These products are: VMSmail, DECwindows, and PC Mail which are included in DEC VMS, DECwindows, and PATHWORKS software packages.

DEC MAILworks

DEC MAILworks is a set of electronic messaging applications which implement the international messaging standards set by the CCITT X.400 P2 Recommendations. It provides a means of exchanging messages and attached data with other users, and is a consistent user interface across heterogeneous desktop devices in a client/server implementation.

Layered on top of Digital Equipment Corporation's VAX Message Router (SPD 26.33.xx), DEC MAILworks applications interact with all other MAILbus gateways and complementary products.

DEC MAILworks (formerly ALL–IN–1 MAIL) is a client/server implementation supporting Video Terminals, DOS PCs, Apple Macintosh PCs, DECwindows VMS workstations, and other X11 display devices. DEC MAILworks represents an upgrade path for current users of Digital's VMS Personal Mail Utility (VMSmail), DECwindows VMSmail, or the PC Mail interfaces provided with the PATHWORKS product set (formerly DECnet/PCSA).

Client software performs services for the user. This software usually resides on an intelligent desktop device and takes advantage of the processing power on the desk.

Clients are connected to the DEC MAILworks Server where local and wide area network delivery services are performed.

Transport between DEC MAILworks Servers and between DEC MAILworks and the other products in the ALL–IN–1 Phase II product family is performed by the VAX Message Router. Optional gateways may also be connected to the VAX Message Router as needed for mail transfer in a multivendor environment.

A user might alternately use an intelligent workstation in the office, a video terminal at home, and a DOS notebook PC while traveling. Clients are provided for all three situations, all using the same user mailbox and files on the server.

DEC MAILworks conforms to the National Institute for Science and Technology (NIST) profile of 1984 CCITT X.400 Recommendations. It provides a level of messaging service compatible with that of the electronic messaging subsystem of the ALL–IN–1 Integrated Office System, and adds new service elements defined in DEC MAILworks.

Note: For the purposes of this document, IBM's Personal Computer Disk Operating System, Microsoft Corporation's MS-DOS, and COMPAQ Computer Corporation's COMPAQ MS-DOS are referred to simply as DOS.

Features

- Compatibility with VMSmail

  Messages can be exchanged with VMSmail on the same system or elsewhere in the DECnet network by means of the VAX Message Router VMSmail Gateway. This is included in the DEC MAILworks Wide Area Network Server Package or can be purchased as an option.

- Compatibility with ALL–IN–1 IOS

  Messages can be exchanged with the ALL–IN–1 Integrated Office System by means of the VAX Message Router using the same style of addressing.

The services of DEC MAILworks are compatible with services in the electronic messaging subsystem of ALL–IN–1. For example, receipt requests from either product are honored by the other. New features defined in the CCITT X.400 P2 Recommendations may be implemented in stages by both products.

- X.400 Message Transport

  Messages can be exchanged with other DEC MAILworks domains and services which meet international X.400 P2 conformance criteria. Conformance testing is being done in the United States and Europe.

  In DEC MAILworks, each customer network is referred to as a "domain." Within a customer network, messages are transported by means of DECnet wherever DECnet is available. Transport to another vendor's X.400 service requires an OSI networking stack and the VAX Message Router X.400 Gateway (MRX).

- Editors

  Users can select an editor for use in DEC MAILworks. Any editor called or spawned under VMSmail can be called or spawned from DEC MAILworks. Editors which may be called from a .BAT file can be implemented under DEC MAILworks for DOS.

- Supporting the Multivendor Environment

  MAILbus offers a series of off-the-shelf gateways and a gateway development kit to create other gateways for message exchange with other vendors' proprietary mail systems. Refer to the Software Product Description (SPD) for the appropriate products' hardware/software requirements.

- Directory Services

  DEC MAILworks uses Digital's enterprise-wide Distributed Directory Service (DDS) as its user address directory. This distributed directory, available as part of the VAX Message Router, links DEC MAILworks, the ALL–IN–1 Integrated Office System, the gateways, and any other agents sharing its directory services.

- Personal Address Book

  Users can access the DDS directory while addressing a memo or creating an entry in their Personal Address Book (PAB). The PAB is an integral part of DEC MAILworks and is located in each user's personal mail account, or in the local file store on the intelligent client device. The user references a PAB entry by using its user-assigned nickname. Distribution lists may contain nicknames.

- Laptop Operation

  The DDS directory is a networking resource available only while the server connection is in place. If messages are created and addressed on a PC in the absence of the server connection, the user can still use locally stored nicknames and distribution lists, or type the full address string.

- Distribution Lists

  Distribution lists are simple text files stored in the user's mail area. These distribution lists can be shared among a group of users by using the VMS Access Control facilities and PATHWORKS.

- Filing Services

  DEC MAILworks provides a filing structure of drawers and folders as well as access to RMS files. Filing services are similar in nature to VMSmail. The DOS client has the same filing structure of drawers and folders on the PC, and a drawer on the VMS server. The PC can also access files stored on the local DOS device.

- Message Retrieval

  Messages can be retrieved based on user specification of certain header fields and filing structures.

- File Formats

  A variety of different editors can be used with the various interfaces. A variety of file formats come with these editors. DEC MAILworks is designed to handle various file formats with features that allow configuration for maximum readability of messages. The system allows for the automated handling of messages in ASCII, DDIF, WPS-PLUS and DX, and for invocation of other file formatting or conversion routines that conform to Digital's CDA Architecture, or to standard DOS conventions.

- Conversions

  Beginning with Version 1.1, DEC MAILworks can be set to perform automatic conversions of message components as they are delivered, using optional VMS-resident conversion services such as Digital's CDA Converter Library for VMS (SPD 31.31.xx) or other third-party converters such as KEYpak for VMS (SPD 32.71.xx). This is an additional-cost option. Users can register their file format preferences in the profile. For Version 1.0 of the Macintosh client, user format preferences must be registered by the system manager on the server.

- Help

  Users can get help for DEC MAILworks using the HELP facility. HELP provides basic information on how to perform the function in question without the user having to reference the documentation.

- Printing

  DEC MAILworks takes advantage of Digital's standard VMS printing facilities provided under VMS and PATHWORKS for VMS. The user can specify the printer destination and options.

- Messaging Functions

  Users can create, read, and send messages using the commands provided. Messages can contain information in a variety of file format types including Digital's Document Interchange Format for compound documents (DDIF).

  Messages can be forwarded to another destination. Message attachments may include another message, a document or file, or even a binary file.

  When answering a message, the system automatically addresses the answer for transfer back to the original sender. The user can reply to the sender alone, to all the original recipients, or to a reply-to list.

- Notifications

  Delivery and Receipt tags can be attached to a message. These tags cause a notification message to be generated and returned to the originator when the message is delivered or received.

- Message Redirection

  The user can request that all incoming messages be automatically redirected to a secondary address.

- Priority-based Delivery

  Users can choose priority for message delivery. The grade of delivery (express, first class, second class) can be specified. Other transport services are also available.

- Message Classes

  The user can set a number of indicators to give the recipient information about the nature of the message: Importance (high, medium, low), Sensitivity (not restricted, personal, private, company confidential).

  Expiration dates may be applied to messages to help facilitate automatic removal over time.

- System Management

  The DEC MAILworks Server provides a management utility that allows configuration changes to be made, and the status of the mail system to be checked. Invoking this utility via the VMS SYSMAN utility allows such operations to be managed centrally.

- Internationalization

  DEC MAILworks is designed to support multilingual operations. It can be deployed in a multilingual network and can support multilingual operations on a single server system. For more information, refer to the System Support Addendum (SSA 31.51.02-x).

  For clients in other languages refer to:

- DEC MAILworks	SPD 26.J6.xx FRANCAIS
- DEC MAILworks	SPD 26.J7.xx ITALIANO
- DEC MAILworks	SPD 26.J8.xx DEUTSCH

DEC MAILworks Server

The DEC MAILworks VMS server requires VMS operating system V5.3 or higher, DECnet VAX V5.3 or higher, PATHWORKS for VMS V4.0, and DEC MAILworks Server for VMS. Optional hardware includes the VAX Message Router, the VAX Message Router VMSmail Gateway, or other Message Router gateways. For Macintosh service, PATHWORKS for Macintosh V1.0 (VMS resident component) is required.

The DEC MAILworks Server delivers messages among all the users of any combination of the available DEC MAILworks clients that use this one server. Thus, all users on a single VAXcluster or on a single LAN may exchange messages via a single DEC MAILworks Server.

The VAX Message Router is required to exchange messages with users on other servers, or other electronic messaging products. It must be coresident with the VMS Server on the same node or VAXcluster. To communicate with VMSmail users, the VMSmail Gateway is also required.

Prerequisite Hardware

VAX, MicroVAX, VAXserver, VAXstation, PC, and Macintosh configurations as specified in the System Support Addendum (SSA 31.51.02-x).

Prerequisite Software

For the DEC MAILworks Server for VMS to support any or all of the clients, and for DEC MAILworks for Video Terminals:

- VMS Operating System
- DECnet VAX

PATHWORKS for VMS is required on VMS to support any DOS and/or Macintosh clients using PATHWORKS as the connection between client and server.

For the client DEC MAILworks for VMS DECwindows on the Workstation:

- VMS Operating System (and necessary components of VMS DECwindows)
- DECnet VAX

For the client DEC MAILworks for DOS on the PC:

- MS-DOS, PC-DOS or COMPAQ-DOS Operating System
- The appropriate PATHWORKS version:
  - PATHWORKS for DOS
  - DECnet PCSA Client for DOS
  - Asynchronous connection to the VAX

On its corresponding DEC MAILworks Server:

- VMS Operating System
- DECnet VAX
- VMS Services for PCs or PATHWORKS for VMS
- DEC MAILworks Server

Refer to the System Support Addendum (SSA 31.51.02-x) for availability and required versions of prerequisite/optional software and for information regarding components of VMS DECwindows.

For the client DEC MAILworks for Macintosh on the Macintosh PC:

- Apple Macintosh Operating System
- PATHWORKS for Macintosh

On its corresponding DEC MAILworks server:

- VMS Operating System
- DECnet VAX
- PATHWORKS for Macintosh (VMS-resident components)
- DEC MAILworks Server

▲ Refer to the System Support Addendum (SSA 31.51.02-x) for availability and required versions of prerequisite/optional software and for information regarding components of VMS DECwindows.

Gateway Requirements

Most configurations will require the Message Router, and all sites migrating from or interacting with a VMSmail product will require the VMSmail Gateway. The DEC MAILworks Wide Area Network Server Package combines these underlying software components with the DEC MAILworks Server.

Since the Message Router is packaged with the VMSmail Gateway, choose **one** of the following packages:

- VAX Message Router
- VAX Message Router VMSmail Gateway

Country Component Software

▲ For information on country-specific modifications to this product, refer to the System Support Addendum (SSA 31.51.02-x).

Ordering Information for Server and Client Options

Choose one of the following server options:

Server Options

Option	Order Code
DEC MAILworks Local Area Network Server Package	
This package is used in implementations where there is no requirement to exchange mail beyond a single server, or where the Message Router is already owned.	
Software License and Media (TK50 only)	QB-YFTA9-AA
Software Product Services	QT-YCZA*-**
Includes license, media and documentation for DEC MAILworks Server implemented on any single CPU. Choose this kit to implement DEC MAILworks Server on a node, VAXcluster, or Local Area Network where the Message Router is already licensed, or where it is not necessary to connect to any other node, or any other messaging product.	

Server Options (Continued)	
Option	**Order Code**
DEC MAILworks Wide Area Network Server Package	
This package is used in multiserver configurations, or where there is a requirement to work with another messaging product.	
Software Licenses	QL-YFUA9-J*
Software Product Services	QT-YCZA*-**
Includes licenses for DEC MAILworks Server, Message Router, VMSmail Gateway, and Message Router X.400 Gateway. Media and documentation update service for these components must be purchased separately depending upon which components will be implemented; see service offerings for DEC MAILworks Server for VMS, plus one of the two gateway packages: Message Router VMSmail Gateway (SPD 26.33.xx) or Message Router X.400 Gateway (SPD 27.50.xx). Service on either gateway covers service for the Message Router itself.	
Software Media	QA-YFUAA-**
Includes media and documentation for DEC MAILworks Server, Message Router, and VMSmail Gateway. Media and documentation for the Message Router X.400 Gateway must be purchased separately.	
DEC MAILworks Server for VMS	
Software Licenses	QL-YCZ9A-**
Software Media	QA-YCZA*-**
Software Documentation	QA-YCZAA-GZ
Software Product Services	QT-YCZA*-**
The media kit includes media and documentation for the server, and media only (no documentation or license) for the DECwindows and Video Terminal clients. See Client Options for licensing information for these clients.	
Choose this package to order licenses and media kits separately, or to add licenses for more than one CPU in a VAXcluster.	

The following client options are available:

Client Options	
Option	**Order Code**
DEC MAILworks for Windows	
Personal Use License	QL-XZJAG-2B
Software Media	QA-XZJAA-HB
Software Documentation	QA-XZJAA-GZ
Software Product Services	QT-XZJA*-**

Client Options (Continued)	
Option	**Order Code**
DEC MAILworks for DOS	
Personal Use License also available	QL-VZ8AF-2B
Software Licenses (the license for DEC MAILworks for DOS is included in the PATHWORKS for DOS license)	QL-VZ8AW-**
Software Media	QA-VZ8A*-**
Software Documentation	QA-VZ8AA-GZ
Software Product Services	QT-VZ8A*-**
DEC MAILworks for Macintosh	
Software Licenses: Available only with PATHWORKS for Macintosh	
Software Media	QA-YX1A*-**
Software Documentation	QA-YX1AA-GZ
Software Product Services	QT-YX1A*-**
DEC MAILworks for Video Terminals	
Personal Use License also available	QL-YHSAA-2B
Software Licenses	QL-YHSA9-**
Software Media: Included with the server media	
Software Documentation	QA-YHSAA-GZ
Software Product Services	QT-YHSA*-*
DEC MAILworks for VMS DECwindows	
Personal Use License	QL-VZ7AA-2B
Software Licenses	QL-VZ7A*-**
Software Media: Included with the server media	
Software Documentation	QA-VZ7AA-GZ
Software Product Services	QT-VZ7A*-**

▲ For information concerning the variant fields (*, **), in the order code tables, refer to the following Software Product Descriptions (SPDs):

- SPD 39.59.xx — DEC MAILworks for VMS (includes server)
  DEC MAILworks for Video Terminals
  DEC MAILworks for VMS DECwindows
- SPD 39.15.xx — DEC MAILworks for Windows
- SPD 39.58.xx — DEC MAILworks for DOS
- SPD 39.62.xx — DEC MAILworks for Macintosh

DEC MAILworks for Windows

DEC MAILworks for Windows client software runs on a DOS PC that supports the Microsoft Windows user interface. This DEC MAILworks User Agent follows the Microsoft Windows style conventions such as icons, pull-down menus and color options, and will feel familiar to windows users.

The Microsoft Windows Edit Control Window is the default editor; however, users can also select their preferred DOS or windows application package to create documents to mail as attachments. DEC MAILworks for Windows allows users to launch other PC-resident applications from within mail, simply with the click of a mouse. Using an application programming interface, users can also arrange to have mail launched from within another application. For example, the user could create a document with Microsoft Word for Windows and send that document via DEC MAILworks for Windows, without leaving the word processing application.

PCs can connect to a DEC MAILworks Server for VMS in the following ways: over local area networks using PATHWORKS, or dialing in from remote locations over an asynchronous DECnet connection.

Features

- Addition of client/server connection via asynchronous communication (e.g., dial in over TYMnet or other packet switching line, or over an X.25 PAD)
- On-board support for distribution list creation editing within mail
- Ability to customize menus and change hot keys
- Support for CDA Converter Library and KEYpak for incoming conversion
- Ability to add external applications to the mail menus

Prerequisite Hardware

DOS-based personal computers supported by PATHWORKS for DOS V4.0 and Microsoft Windows V3.0.

Prerequisite Software

Any valid PATHWORKS for DOS and Microsoft Windows configuration that has a minimum of 4 MB of system memory and a hard disk with a minimum of 3.5 MB of free storage in addition to PATHWORKS for DOS requirements.

On the server:

- DEC MAILworks Server for VMS V1.1
- PATHWORKS for VMS V3.0 or later

On the PC:

- PATHWORKS for DOS V4.0 or later
- PATHWORKS for Windows (includes license)
- DOS V3.3 or later
- Microsoft Windows V3.0

Order Information

DEC MAILworks for Windows Order Codes	
Option	**Order Code**
Personal Use License	QL-XZJAG-2B
Unlimited System Use License	QL-XZJA9-J*
Media and Documentation	QA-XZJAA-HB
Documentation	QA-XZJAA-GZ
Software Product Services	QT-XZJA*-**

DEC MAILworks for DOS

DEC MAILworks for DOS is a DOS character-cell implementation of the client software component of DEC MAILworks. It may be used on any configuration supported by PATHWORKS. The license for this client is packaged with PATHWORKS for DOS, Version 4.0 or Version 4.1.

Compatibility with VMSmail and PC MAIL

Users can migrate from the VMS Personal Mail Utility (VMSmail) or the PATHWORKS PC MAIL to DEC MAILworks for DOS. The interface is a logical extension of the PC MAIL interface, and commands and services in DEC MAILworks for DOS will feel familiar. Addresses and distribution lists used in VMSmail may be used in DEC MAILworks for DOS.

DEC MAILworks for DOS users can connect to the server over local area networks by way of the DECnet network, by dialing in from remote locations through asynchronous DECnet connections, or through asynchronous connections through LAT, X.25 PAD, or dial–up without benefit of DECnet.

Messages in the existing VMSmail file cabinet on the server can be copied into the DEC MAILworks server file cabinet using the VT interface. Once copied into the DEC MAILworks file cabinet, they are visible from DEC MAILworks for DOS.

Editors

The default editor is a simple text editor.

The DOS-based user can choose from a number of different Digital editors as well as third party editors. Editors invoked using "command filename" from a DOS command file can be used under DEC MAILworks for DOS.

Editor implementation .BAT files are supplied for several PC editors written by third parties. These editor implementation files are provided on an "as is" basis without warranty of any kind, either express or implied.

The user can attach any message, document, or file, including binary files. On the PC, file conversion routines can be implemented using .BAT files to perform translation upon READ and EDIT.

Distribution Lists

Distribution lists can be created and maintained inside the product, either by entering the list, or by capturing the header of a message as a list. A group distribution lists area can be defined on the system. Distribution lists that reside on VMS can be expanded on the server for greater efficiency on the client.

Online Notification of New Mail

While connected to the Server, the user can choose to receive online notification of the arrival of new messages. The notification may be set to optionally contain the sender's name and/or the subject of the message.

In the Microsoft Windows Environment

DEC MAILworks for DOS will run as a character cell application from the DOS command prompt in Microsoft Windows Version 3.0. ▲ For details, refer to the System Support Addendum (SSA 31.51.02-x).

Memory Restriction for PCs

DEC MAILworks for DOS has been designed to be used on a broad range of PCs. ▲ For more information, refer to the System Support Addendum (SSA 31.51.02-x).

DEC MAILworks for DOS does not require extended or expanded memory. However, where extended memory has been installed, DEC MAILworks for DOS provides better performance.

Remote Access for PCs

PCs may connect to the DEC MAILworks Server in one of following ways:

- Over local area networks, connecting to the DEC MAILworks Server via DECnet
- Dialing in from remote locations by means of asynchronous DECnet
- Asynchronous connection via LAT, X.25 PAD, or dial-up without benefit of DECnet.

  Where PCs are running PATHWORKS, DECnet connection is made between client and server using a DECnet object rather than a log in. Thus clients connected using PATHWORKS do not require login licenses on the DEC MAILworks Server node.

  The DECnet dial-in point can be located anywhere within the wide area network. Once the PC becomes a DECnet node, connection may then be made to the appropriate DEC MAILworks Server node.

  Asynchronous service is less efficient than DECnet service. Asynchronous service requires each remote user to log into the server system. Therefore, it is necessary to have VMS login licenses for each concurrently connected client on the DEC MAILworks Server node.

  The PC user can choose to perform most functions without a live connection to the server. The user can connect, fetch messages, and disconnect. Messages can be read, filed, and answers prepared in the absence of the server connection. The user can then dial up, connect, and post all prepared messages at once.

Prerequisite Software

Any valid PATHWORKS for DOS configuration having a minimum of 640 KB of memory (420 KB of free memory is required after loading PATHWORKS for DOS); support for 8-bit characters is provided only on EGA and VGA machines; DOS operating system V3.3 or higher; PATHWORKS for DOS V4.0 or higher (contains the license for DEC MAILworks for DOS)

Ordering Information

DEC MAILworks for DOS Order Codes	
Option	**Order Code**
Media and Documentation	
DEC MAILworks for DOS Media and Documentation (5.25" high density)	QA-VZ8AA-H7
DEC MAILworks for DOS Media and Documentation (3.5" low density)	QA-VZ8AA-HB
Additional Documentation	
DEC MAILworks for DOS documentation (one set)	QA-VZ8AA-GZ

DEC MAILworks for Macintosh

DEC MAILworks for Macintosh is a Macintosh Graphical User Interface implementation of the client software component of DEC MAILworks. It may be used on any configuration supported by PATHWORKS for Macintosh, Version 1.0. The license for this client is included with PATHWORKS for Macintosh, Version 1.0. Like other Macintosh applications, DEC MAILworks for Macintosh is graphics oriented, using icons, pull-down menus, windows, and on-line help.

The Macintosh client connects to the server through the DECnet network, through the PATHWORKS AppleTalk DECnet gateway, or to remote locations through asynchronous DECnet connections. Mail attachments can include MacBinary files (data fork and resource fork or data fork only), allowing the highest level of interoperability in today's heterogeneous computing environment.

Compatibility with VMSmail and PC MAIL

Users can migrate from the VMS Personal Mail Utility (VMSmail) or PATHWORKS PC MAIL to DEC MAILworks for Macintosh. Commands and services in DEC MAILworks for Macintosh will feel familiar. Addresses and distribution lists used in VMSmail may be used in DEC MAILworks for Macintosh.

Messages in the existing VMSmail file cabinet on the server can be copied into the DEC MAILworks server file cabinet using the VT interface. Once copied into the DEC MAILworks file cabinet, they are visible from DEC MAILworks for Macintosh.

Editors

The default editor is a simple text editor with word wrap, and cut and paste.

The Macintosh-based users can sub-launch their favorite editor to create files using a number of different Macintosh editing products, and can attach those files to their messages.

The user can attach any message, document, or file, including binary files. The user may choose whether to attach a Macintosh binary file (including both the data fork and resource fork) or the data fork only. When exchanging readable files between a Macintosh and users of other client platforms, it is important to include the data fork only.

From inside the DEC MAILworks for Macintosh application, the user can sub-launch the appropriate viewer or application software to read messages other than ASCII.

Online Notification of New Mail

While connected to the server, the user can choose to receive online notification of the arrival of new messages. The notification may optionally be set to generate a choice of sounds, sender name, and/or the subject line of the message. If the sender or subject is displayed, the user is given the option to launch into mail with a single click.

Memory Restriction for a Macintosh

DEC MAILworks for Macintosh is designed to be used on most models in the Macintosh product line having the minimum configurations required by PATHWORKS for Macintosh. ▲ For more information, refer to the System Support Addendum (SSA 31.53.02-x).

Remote Access for a Macintosh

A Macintosh may connect to the DEC MAILworks Server in one of the following ways:

- Over local area networks, connecting to the DEC MAILworks Server via DECnet, or via the AppleTalk DECnet gateway
- Dialing in from remote locations by means of asynchronous DECnet

The dial-in point can be located anywhere within the wide area network. The Macintosh user can choose to perform most functions without a live connection to the server. The user can connect, fetch messages, and disconnect. Messages can be read, filed, and answers prepared in the absence of the server connection. The user can then dial up, connect, and post all prepared messages at once.

Prerequisite Software

PATHWORKS for Macintosh (contains the license for DEC MAILworks for Macintosh).

Ordering Information

DEC MAILworks for Macintosh Order Codes	
Option	**Order Code**
Media and Documentation	
DEC MAILworks for Macintosh Media and Documentation (RX24)	QA–YX1AA–HB
Additional Documentation	
DEC MAILworks for Macintosh documentation (10 sets)	QA–YX1AA–GZ

DEC MAILworks for Video Terminals

DEC MAILworks for Video Terminals looks like VMSmail but communicates directly with the Message Router, and uses a rich protocol that accesses the full range of messaging services. This client is collocated with the DEC MAILworks Server. It provides ordinary terminals with the same access to the services of DEC MAILworks. Because it shares the same server with the Windows, DOS, Macintosh, and DECwindows clients, it allows VT users to communicate easily with users of other desktop devices.

Compatibility with VMSmail

Users can migrate from the VMS Personal Mail Utility (VMSmail) to DEC MAILworks for Video Terminals. The command line interface is a logical extension of the VMSmail command interface, and commands and services in DEC MAILworks for Video Terminals will feel familiar. Addresses, nickname logicals, and distribution lists used in VMSmail may be used in DEC MAILworks for Video Terminals.

DEC MAILworks for Video Terminals can locate and view messages in the existing VMSmail file cabinet, and copy them into the DEC MAILworks file cabinet.

Editors

The default editor is a simple text editor.

The VMS based user can choose from a number of different Digital editors as well as third party editors. Any editor that can be called or spawned from VMSmail can be called or spawned from DEC MAILworks.

Distribution Lists

Distribution lists can be created and maintained inside the product, either by entering the list or by capturing the header of a message as a list. A group distribution lists area can be defined on the system.

DEC MAILworks for VMS DECwindows

DEC MAILworks for VMS DECwindows is a DECwindows implementation of the client software component of DEC MAILworks. It adheres to the DECwindows Style Guide and can be used either on a workstation that is a member of the same Local Area VAXcluster as the server software, or remotely using an X11 display server device supported by Digital.

Access from Other Platforms

Since DEC MAILworks conforms to the DECwindows standards, users of devices which have X-servers available can access the mail software. In this case, the message composition and storage activities are not handled on the desktop device but on the DEC MAILworks server. The windows display is handled by the desktop device. This feature provides access for additional desktop devices that conform to the DECwindows standards.

Compatibility with VMSmail and DECwindows VMSmail

Users can migrate from the VMS Personal Mail Utility (VMSmail) or DECwindows VMSmail to DEC MAILworks for VMS DECwindows. The interface is a logical extension of the DECwindows VMSmail interface; commands and services in DEC MAILworks for VMS DECwindows will feel familiar. Addresses, nickname logicals, and distribution lists used in VMSmail may be used in DEC MAILworks for VMS DECwindows.

DEC MAILworks for VMS DECwindows can copy messages from the existing VMSmail file cabinet into the DEC MAILworks file cabinet.

Editors

The default editor is a simple text editor.

The DECwindows user can choose from a number of different Digital editors as well as third-party editors. Editors called or spawned from DECwindows VMSmail can be called or spawned from DEC MAILworks for VMS DECwindows, including such windows editors as DECwrite.

ALL–IN–1 Integrated Office System (IOS) Server for VMS

ALL–IN–1 IOS Server for VMS V3.0 has been extended to provide network-based services to PCs. These services include application integration, file cabinet integration, mail processing for remote PCs, and ALL–IN–1 IOS VMS-based filing system integration. This version also supports the power of PCs and DECwindows using the customer's existing equipment, plus local languages for Europe and GIA.

Many desktops can take advantage of the rich set of ALL–IN–1 IOS resources. These resources include:

- ALL–IN–1 Personal Assistant — enables users to filter out electronic "junk mail" and streamline other tasks.
- ALL–IN–1 Desktop Integration — combines ALL–IN–1 Integrated Office System and multiple desktop environments, so that they work together as one unified system. Supported desktops include DOS character cell and Microsoft Windows PCs (in desktop, laptop, and notebook varieties), Macintoshes, VMS workstations, and video terminals.
- Workflow automation — for routing and tracking information for approval.
- MOBILIZER for ALL–IN–1 — for remote connections to ALL–IN–1 IOS from notebook PCs.
- Information retrieval — interface to DEC VTX.

Features

- The ALL–IN–1 DESKtop Server for VMS provides support for DOS PCs, Macintosh systems, and VMS DECwindows workstations by implementing client/server technology.
- Extended system performance through a client/server relationship.
- Group Conferencing (VAX Notes).
- Improved application integration with new scripting for PCs and workstations.
- Initial Digital Document Interchange Format (DDIF) allows files to be sent, forwarded, and received by mail; imported and exported using ALL–IN–1 IOS; and conversion into different formats.
- Improved management of end-user print, batch, and server queue.
- WPS-PLUS VMS V3.1 update provides improved paragraph numbering.
- Support for the Licensing Management Facility (LMF).
- Personal Licensing Reporting.
- File Cabinet Verify and Repair program.

Prerequisite Software

- VMS operating system V5.1 or later
- DECnet VAX V5.1 is required for multinode support
- VAX FMS V2.4 (included in ALL–IN–1 kit)
- Message Router VMS Gateway V3.1 (included in ALL–IN–1 kit)
- CDA Converter Library, required for DDIF document transfer (included in ALL–IN–1 IOS kit)
- VAX Notes V2.1 (license is included with the ALL–IN–1 license)

Ordering Information

Use the software order code template in Section 5 when building an order code number from the software's Unique Product Identifier (UPI). ▲ Refer to the Software Product Description (SPD) 27.30.00, or consult your local sales representative to determine whether the software application ordered is supported by the processor for which it is intended.

- ALL–IN–1 IOS, Unique Product Identifier AAA
- WPS-PLUS/VMS to ALL–IN–1 upgrade, Unique Product Identifier AA1
- ALL–IN–1 STARTER, Unique Product Identifier VNN
- ALL–IN–1 STARTER to ALL–IN–1 upgrade, Unique Product Identifier VNP

ALL–IN–1 Personal Assistant

The ALL–IN–1 Personal Assistant contains a set of text searching and filtering functions, allowing you to quickly sort through and organize electronic mail messages and ALL–IN–1 documents. The ALL–IN–1 Personal Assistant can also take specific action on messages and documents, based on the criteria you specify.

The ALL–IN–1 Personal Assistant uses simple menu-driven rules that can be applied to any incoming mail message or file cabinet document.

As an example, you could create a rule to filter all incoming mail to watch for a particular sender name/address, or to search for the phrase "action needed," occurring in the message Subject field. If the "action needed" phrase is found or you receive a message from the designated sender, the ALL–IN–1 Personal Assistant will take the action you have established — such as attaching a document you have specified to the original message, and then forwarding a copy to another user — and accomplish it automatically.

As another example, perhaps you want an easy method for filing and reading the many "For Your Information" (FYI) messages you receive each day. Simply call up the Rule Management menu of the ALL–IN–1 Personal Assistant. Create a rule with the name FYI and fill in the conditions. In this case, you might note that all documents or messages containing FYI or the phrase "For Your Information" in the Subject field are to be automatically copied into an FYI folder and sent to a print queue.

Features

- User-definable rules and actions applicable to ALL–IN–1 IOS file cabinet and mail folders.
- Uses standard ALL–IN–1 forms with natural language phrases.
- New ALL–IN–1 capabilities for information management.
- Set up can be customized by system manager.

Prerequisite Hardware

- ALL–IN–1 IOS runs on Digital's wide range of VAX computer systems. With the correct combination of hardware, software, networks, and support, ALL–IN–1 systems can provide solutions for your entire enterprise — from one person to many thousands of users around the world.

Prerequisite Software

- The ALL–IN–1 Personal Assistant operates with VMS V5.4 (or later) and ALL–IN–1 V3.0 or later.

Ordering Information

Use the software order code template in Section 5 when building an order code number from the software's Unique Product Identifier (UPI). ▲ Refer to the Software Product Description (SPD), or consult your local sales representative to determine whether the software application ordered is supported by the processor for which it is intended.

- Software Product Description 37.53.00; Unique Product Identifier MDX

▲ For assistance in selecting the right VAX system for your needs, contact your Digital account representative.

ALL–IN–1 Desktop Integration

ALL–IN–1 desktop integration software combines your ALL–IN–1 Integrated Office System and multiple desktop environments, so that they work together as one unified system. Supported desktops include DOS character cell and Microsoft Windows PCs (in desktop, laptop, and notebook varieties), Macintosh systems, VMS workstations, and video terminals.

ALL–IN–1 Desktop Integration

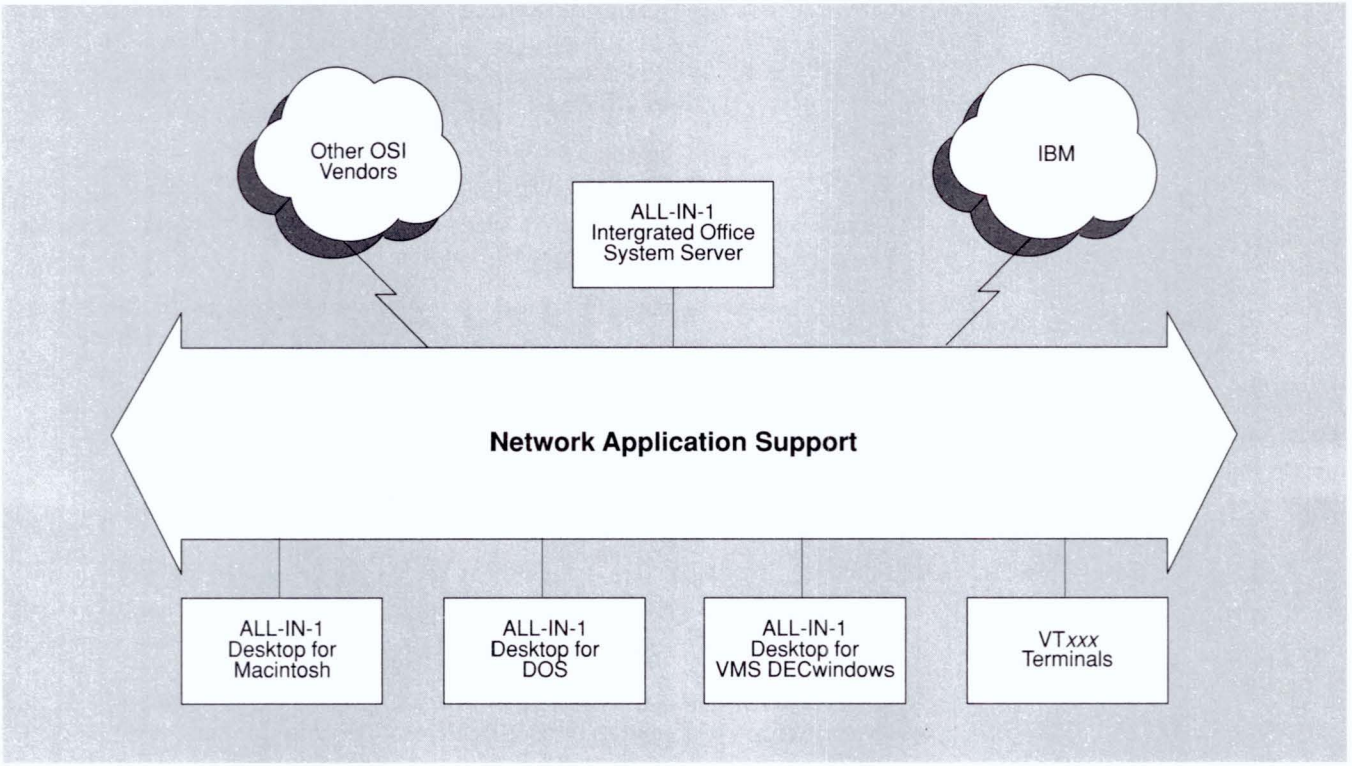

TBG-185-00

A "client" software component installs on each desktop device. "Server" software installs on your host ALL–IN–1 IOS system, and provides the mail routing, sorting, scheduling, and user management for all the desktop clients installed.

You get the full power of your PC, Macintosh, or workstation, with all the application packages available for it, and full access to the networked resources of your ALL–IN–1 IOS System. And it's very easy to exchange information between these environments.

Your Best Work Environment

If you regularly work "locally" on a PC, Macintosh, or workstation, you can use the ALL–IN–1 desktop software to gain transparent access to filing services, mail systems, integrated business applications, and other ALL–IN–1 applications, such as calendar management or conferencing. And you still have access to all the "personal" software you like to use on the desktop.

For example, using Digital's ALL–IN–1 DESKtop for DOS software, you could create a report on your PC using Lotus 1–2–3 and WordPerfect, then mail the report to other users on the ALL–IN–1 system. Or you could be on the road using a notebook PC and ALL–IN–1 MOBILIZER software, and tie into the ALL–IN–1 system to read your mail and respond to any urgent messages. Macintosh users might take advantage of special system resources such as a departmental color printer, as well as the mail and filing services of the ALL–IN–1 system.

On the other hand, if you're accustomed to an ALL–IN–1 system as your primary work environment and just happen to be working on a PC or even a VAXstation, you can use the ALL–IN–1 desktop software to tap the additional processing power and applications software of your local processor.

The Customized Desktop

ALL–IN–1 desktop software gives you an interface that's modeled after each desktop's native style. If you are a Macintosh user, the ALL–IN–1 DESKtop for Macintosh software will look and feel familiar.

You can also use setup menus to specify keypad styles, screen colors, passwords, and mouse control options. Also, you can add your own applications to the ALL–IN–1 desktop menus and submenus, for a system that's just right for you.

Note: You must have ALL–IN–1 DESKtop server software on your ALL–IN–1 IOS host system, and client software on each desktop.

ALL–IN–1 DESKtop Server for VMS

ALL–IN–1 DESKtop Server for VMS is VMS layered software that allows an existing ALL–IN–1 IOS time-shared system to be used as a server for the various desktop clients. The services it provides are mail routing, sorting and scheduling, PC user management, the ability to access VMS and ALL–IN–1 IOS files and printers, and capabilities to integrate word processing and a spreadsheet conversion software package such as KEYpak. The license to run the server is included with the ALL–IN–1 V2.4 or later license and each desktop user must have an ALL–IN–1 IOS account.

Features

The server and client software bring a variety of desktops into the ALL–IN–1 IOS strategy by

- Providing PC applications for desktop management, mail and communications.
- Offloading VAX-based ALL–IN–1 CPU cycles by integrating popular word processing and spreadsheet applications.
- Giving desktop users access to ALL–IN–1 IOS services such as Time Management, VAX Notes, and other VAX based applications.
- Providing a scripting language toolkit for customization and building of Message-Based Applications (MBA). MBAs allow information to be retrieved from databases and other resources that can be sent back to the user via mail.

Prerequisite Hardware

For the ALL–IN–1 DESKtop Server for VMS:

- Any VAX or MicroVAX system (except VAX-11/725, VAX-11/782, MicroVAX I, VAXstation 8000, or VAXstation I)

For the ALL–IN–1 DESKtop for DOS:

- A DOS-based PC with the following:
  - 1 MB RAM
  - One 3.5- or 5.25-inch floppy diskette drive
  - 2.5 MB of disk space if not using PATHWORKS for DOS disk sharing
  - A serial port with Hayes-compatible or Digital Scholar Plus modem, or Ethernet connection

For the ALL–IN–1 DESKtop for Macintosh:

- One of the following Macintosh computers:
  - Macintosh Plus, SE, SE Classic, II, IIX, IISX, IISI, IICX, IIFX
- 1.5 MB of memory
- A serial communications line with Hayes-compatible or Digital Scholar Plus modem, or Ethernet connection
- One floppy diskette drive
- One hard disk drive

For ALL–IN–1 Services for VMS DECwindows:

- A VAX, MicroVAX, VAXstation, DECstation, or DECwindows terminal configuration as specified in the System Support Addendum (SSA 33..22.00-x)

Prerequisite Software

For the ALL–IN–1 DESKtop Server for VMS:

- VMS operating system V5.0-2 or later
- ALL–IN–1 Integrated Office System Server V2.4 or later

For the ALL–IN–1 DESKtop for DOS:

- DOS operating system V3.3 or later. Supported operating systems include IBM PC DOS, Microsoft MS-DOS, COMPAQ DOS, Olivetti DOS, Zenith Data System DOS, and DECstation DOS.

For the ALL–IN–1 DESKtop for Macintosh:

- Macintosh operating system V6.0.4 or later
- Apple Communications Toolbox V1.0
- Ethernet boards require the following software:
  - PATHWORKS for Macintosh, V1.0
  - TSSnet V2.0
  - PacerLink V5.01b

For ALL–IN–1 Services for VMS DECwindows:

- VMS operating system V5.2 or later (plus necessary components of VMS DECwindows)
- CDA Converter Library for VMS V1.0 or later
- ALL–IN–1 Integrated Office System V2.4 with all prerequisite software as specified in Software Product Description (SPD) 27.30.xx

Optional Software

For the ALL–IN–1 DESKtop Server for VMS:

- KEYpak word processing format conversion software
- CDA Converter Library V1.1
- PATHWORKS for VMS V4.0 or later

For the ALL–IN–1 DESKtop for DOS:

- PATHWORKS for DOS V4.0 or later

For the ALL–IN–1 DESKtop for Macintosh:

- PATHWORKS for Macintosh V1.0

Ordering Information

ALL–IN–1 DESKtop Integration Products Order Codes

Option	Order Code
ALL–IN–1 DESKtop Server for VMS V1.1	QA-YFFAA-H5/M
ALL–IN–1 DESKtop for DOS Personal Use License	QL-YFEAF-2B
ALL–IN–1 DESKtop for Macintosh Personal Use License	QL-YLAAH-2B
ALL–IN–1 Services for VMS DECwindows Personal Use License	QL-YG4AA-2B

Use the software order code template in Section 5 when building an order code number from the software's Unique Product Identifier (UPI). ▲ Refer to the Software Product Description (SPD) 25.D9.01, or consult your local sales representative to determine whether the software application ordered is supported by the processor for which it is intended.

- ALL–IN–1 DESKtop Server for VMS, Unique Product Identifier YFF
- ALL–IN–1 DESKtop for DOS, Unique Product Identifier YFE
- ALL–IN–1 DESKtop for Macintosh, Unique Product Identifier YLA
- ALL–IN–1 Services for VMS DECwindows, Unique Product Identifier YG4

ALL–IN–1 STARTER

ALL–IN–1 STARTER V2.4 gives user access to the same electronic mail services, VAX FMS, word processing, and file cabinet as ALL–IN–1 V2.4. It does not contain the Time Management and Group Conferencing subsystems or the customization capabilities of ALL–IN–1 V2.4.

ALL–IN–1 STARTER is fully compatible with ALL–IN–1 IOS, so all data and user training experience are transferable from one product to the other. Upgrading to ALL–IN–1 V2.4 does not require data conversion, but may require additional hardware and software resources to use the additional functionality of ALL–IN–1.

Features

- ALL–IN–1 STARTER V2.4 is an entry-level, integrated office system that supports VTs and the power of PCs and other desktop devices, protecting customers' existing investments.
- Initial Digital Document Interchange Format (DDIF) support.
- Supports local languages for Europe and GIA.

Ordering Information

Use the software order code template in Section 5 when building an order code number from the software's Unique Product Identifier (UPI). ▲ Refer to the Software Product Description (SPD) 25.D9.00, or consult your local sales representative to determine whether the software application ordered is supported by the processor for which it is intended.

- ALL–IN–1 STARTER, Unique Product Identifier VNN
- WPS-PLUS VMS to ALL–IN–1 STARTER Upgrade, Unique Product Identifier VNQ

MOBILIZER for ALL–IN–1

MOBILIZER for ALL–IN–1 allows business travelers to stay in touch with their electronic mail, even when they are out of the office. MOBILIZER for ALL–IN–1 users communicate through the familiar ALL–IN–1 interface, using distribution lists from their office-based ALL–IN–1 account.

By bringing remote mail capabilities to portable systems, Digital allows the business traveler to stay in touch with the office without suffering through interminable low-speed connections.

MOBILIZER provides basic terminal emulation and bidirectional asynchronous message transfer capabilities between DOS notebook, laptop, and palmtop computers and the ALL–IN–1 Integrated Office System's Mail and File Cabinet (V2.3 and V2.4). Using the ALL–IN–1 IOS as its server, MOBILIZER for ALL–IN–1 simulates an ALL–IN–1 electronic messaging session with a subset of the ALL–IN–1 IOS Electronic Mail, Folder, Nickname, and Distribution List commands.

Prerequisite Hardware

The PC requires 1 MB RAM, 512 KB storage (in addition to space for MS-KERMIT) and MS-DOS V3.3 or higher. The right to use the server is included in the client license.

Prerequisite Software

Configuration requirements are a VMS account with full DCL access on a VAX server running VMS V5.1 or higher (including VMS Required Saveset and VMS Utilities Saveset) and ALL–IN–1 V2.3 or higher.

MOBILIZER for ALL–IN–1 Order Codes	
Option	**Order Code**
MOBILIZER for ALL–IN–1 VAX VMS Server Media and Documentation:	
MOBILIZER for ALL–IN–1 VAX VMS Server Media and Documentation (TK50)	QA–XWWAA–H5
MOBILIZER for ALL–IN–1 VAX VMS Server Media and Documentation (magtape)	QA–XWWAA–HM
MOBILIZER for ALL–IN–1 DOS PC Client License:	
MOBILIZER for ALL–IN–1 DOS PC Client License	QL–XWXAW–AA
Client Media and Documentation:	
MOBILIZER for ALL–IN–1 DOS Client Media and Documentation	QA–XWXAA–HB
POQET Software License:	
MOBILIZER for ALL–IN–1 DOS POQET Client License	QL–XWXAX–AA
POQET Media and Documentation:	
MOBILIZER for ALL–IN–1 DOS POQET Media and Documentation	QA–XWXAA–HS
Additional Documentation:	
MOBILIZER for ALL–IN–1 Server Documentation	QA–XWWAA–GZ
MOBILIZER for ALL–IN–1 DOS Documentation	QA–XWXAA–GZ
MOBILIZER for ALL–IN–1 DOS POQET Documentation	QA–XWXAB–GZ

MAILbus 400 for ULTRIX

MAILbus 400 for ULTRIX is a set of new products built on the 1988 CCITT X.400 electronic messaging standard. MAILbus 400 ushers in the next era of electronic messaging with extended management, higher performance, international standards, and lower cost of ownership. MAILbus 400 allows customers to extend their MAILbus messaging networks to the new generation of products without disruption of their current environment.

For multivendor interoperability, Digital provides gateways to popular PC LAN mail systems through the Retix OpenServer, and access to SMTP — the mail environment of TCP/IP — is attained through an integrated X.400/SMTP gateway. And, as with the current MAILbus environment, services are available to assist customers in the planning and design of their messaging networks.

To provide a cohesive messaging product strategy, we also provide DEC MAILworks (formally ALL–IN–1 MAIL). Although under a new name, the DEC MAILworks family of products provides a client/server P2-compliant user agent that can utilize the new MAILbus 400 products through the Message Router/X.400 Gateway. (MAILworks products are described in the previous section, entitled User Agents.) Future versions of the DEC MAILworks products will directly support the MAILbus 400 Message Transfer Agent (MTA). Joining the Digital family of user agents for the UNIX platform is POSTE from Alfalfa Software, Inc. (described later in this section) which supports 10 different UNIX operating system environments and works with Digital's new MAILbus 400 Message Transport Agent.

Multiplatform Mail Configuration

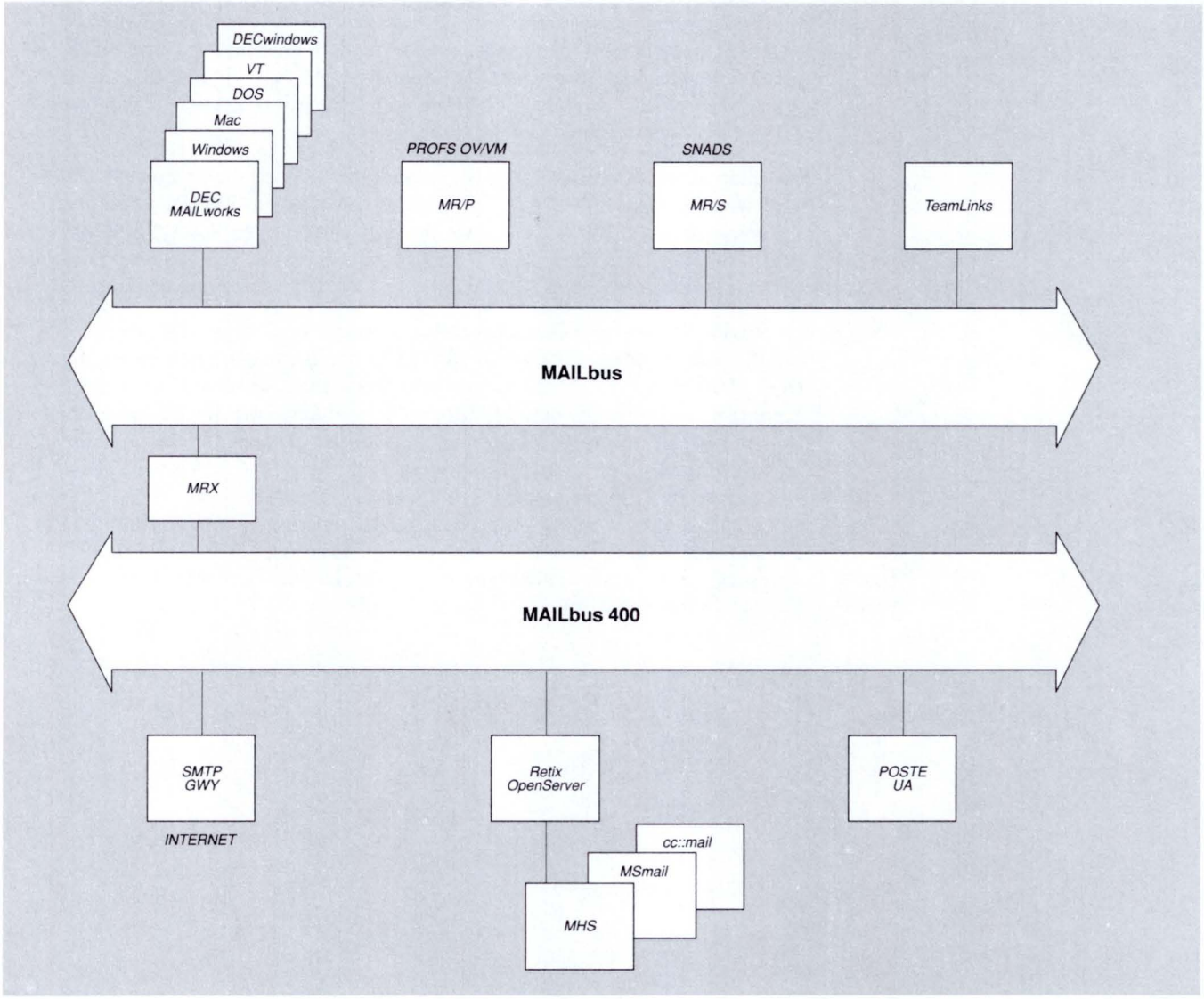

TBG-182–00

MAILbus 400 Message Transfer Agent (MTA)

The MAILbus 400 Message Transfer Agent (MTA) incorporates the 1988 X.400 Message Transfer Agent with an X.500-based directory component that enables the MTAs to share routing information. It provides a messaging service to applications such as user agents and mail gateways. The MAILbus 400 MTA will be available initially on ULTRIX RISC, with VAX VMS to follow.

The operational management of the MAILbus 400 MTA conforms to the Enterprise Management Architecture (EMA), enabling it to be managed from any DECnet OSI node with an appropriate EMA director (for example, the NCL utility). It is supplied with default settings making installation easy, reducing set up time and costs.

The X.500-based routing directory allows all the MAILbus 400 MTAs in a network to have the same picture of how to route messages. This achieves consistency throughout the domain by reducing the management overhead as routing information does not need to be duplicated at each MAILbus 400 MTA. Subsequent versions of the MTA will use the full X.500 Directory Service for this purpose.

The MAILbus 400 MTA can exchange messages with other vendors' MTAs that conform to either the 1984 or 1988 X.400 Recommendations. It can perform conversions on the content of a message, based on which data formats the recipient of a message is capable of processing.

The MAILbus 400 Application Program Interface (API) provides customers and third parties access to the messaging services of the MAILbus 400 MTA. The MAILbus 400 API is an implementation of V2.0 of X/Open CAE Specification and provides both the application and gateway interfaces.

The MAILbus 400 Simple Mail Transfer Protocol (SMTP) Gateway provides a bridge allowing mail to be exchanged between the traditional UNIX system mail community and the X.400 mail community. The gateway is able to use the backbone management facilities and to handle address translations through the X.500-based routing directory. It provides conversion of messages, envelopes, and content as described in RFC 987 and conversion of Bodyparts ASCII to IA5 and IA5 to ASCII.

Features

- Remote management capability.
- MTA management consistent with other network applications.
- Housekeeping eliminated or automated, allowing system to run unattended.
- MTA designed to maximize message throughput.
- Accounting, archiving and Message Trace.
- MTA sets permit alternate paths with automatic failover.
- Checkpoint/recovery. A message transfer, interrupted by a failure of the underlying network, will be resumed at the point it failed.
- Conversions done in MTA. User's acceptable Encoded Information Type (EIT) registered in directory.

The following configuration shows the typical connections between the various components of the MAILbus 400 MTA, Gateways, and User agents, and how management is enabled through NCL. The figure also illustrates how the current MAILbus products (Message Router, Message Router/X.400 Gateway) provide connectivity into the MAILbus 400 MTA.

Typical Configuration

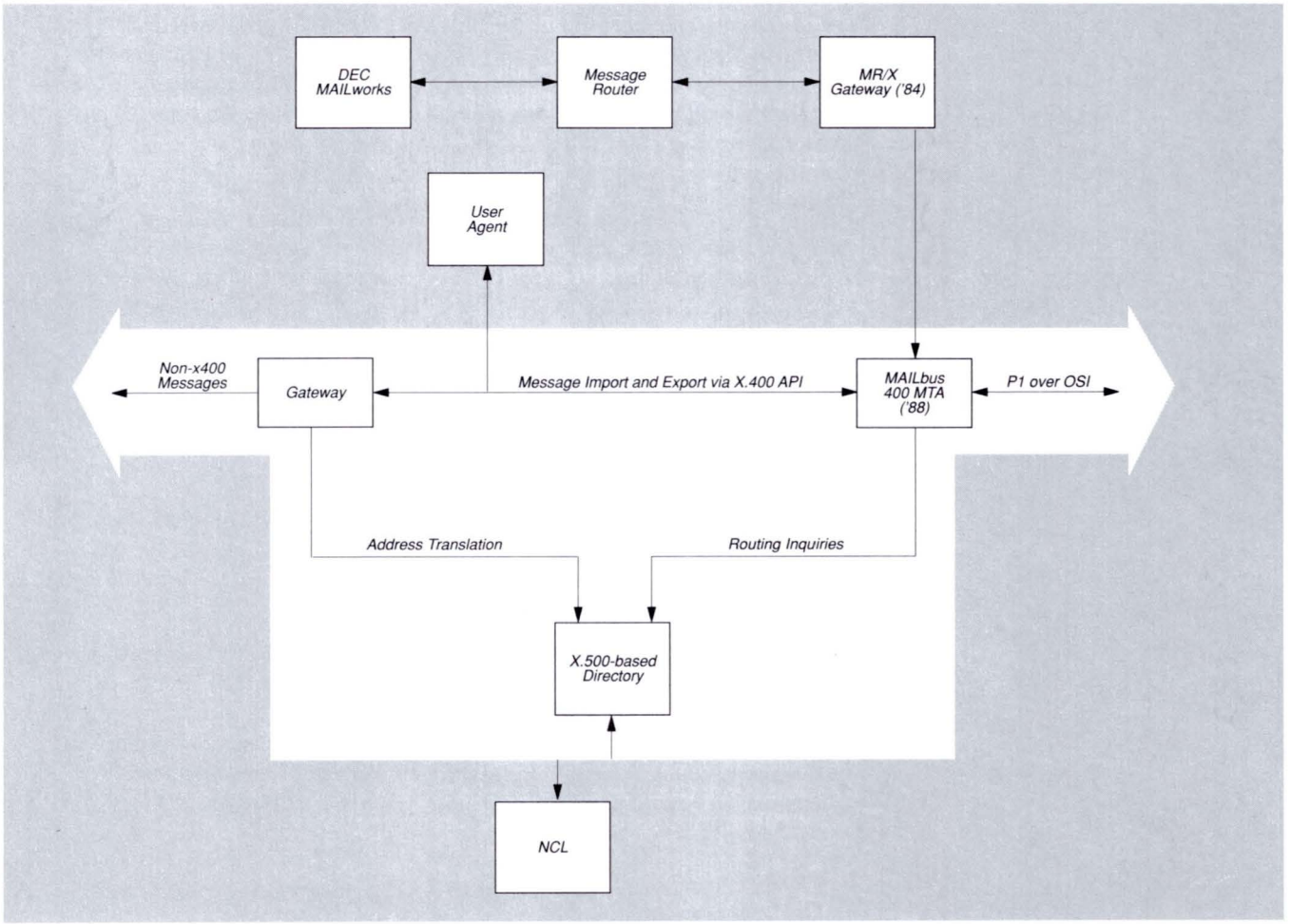

TBG-183–00

Prerequisite Software

MAILbus 400 MTA and MAILbus 400 API require DECnet ULTRIX V5.1 and ULTRIX Operating System V4.2.

MAILbus 400 SMTP Gateway requires the MAILbus 400 MTA, ULTRIX Operating System V4.2, and DECnet OSI for ULTRIX V5.1.

Ordering Information

MAILbus 400 Order Codes	
Option	**Order Code**
MAILbus 400 MTA ULTRIX RISC TK50 Kit	QA–MR6AA–H5
MAILbus 400 MTA ULTRIX RISC 16MT Kit	QA–MR6AA–HM
MAILbus 400 API U/R Trade License	QL–MR7A*–AA
MAILbus 400 API U/R TK50 Kit	QA–MR7AA–H5
MAILbus 400 API U/R 16MT Kit	QA–MR7AA–HM
MAILbus SMTP Gateway U/R Flat License	QL–MR8A8–AA
MAILbus SMTP Gateway U/R TK50 Kit	QA–MR8AA–H5
MAILbus SMTP Gateway U/R 16MT Kit	QA–MR8AA–HM

X.400 MAIL User Agent on UNIX Operating System: Alfalfa POSTE

The POSTE electronic messaging system from Alfalfa Software, Inc. provides an intuitive user interface based on the OSF/Motif Graphic User Interface (GUI). POSTE is an X.400 P2-compliant User Agent for the UNIX operating system and is available on 10 different UNIX platforms. It also

- Bridges the transition from Internet messaging to X.400 messaging by supporting both standards.
- Provides performance, flexibility, and low administrative overhead for workgroups on local area networks (LANs).
- Allows users to exchange the kinds of information they work with daily, including facsimiles, spreadsheets, documents, and scanned images.
- Provides support for foreign languages.
- Can be extended to include new kinds of enclosures.
- Provides both a Motif interface and a command-line interface.

The modular, client/server design allows a lot of flexibility in configuring and managing the system to meet the needs of X-terminal, PC LAN, and workstation users. Message management features include group message stores that allow multiple users to access the same messages, hierarchical folders for grouping documents and messages, plus a query facility to easily find the information you need.

Other features include dialog boxes to assist in addressing and creating distribution lists, a browser for searching through folders and messages, plus online help to prompt you as needed.

POSTE is available for the following UNIX platforms.

- SCO-386 — 386/486 PC with SCO UNIX operating system V3.2 or later
- ULTRIX MIPS — Digital DECstation running ULTRIX 4.0 or later
- Domain/OS (68 K) — HP Apollo 68 K workstation running Domain/OS V10.2 or later

• HP-UX (68 K)	HP 300 or 400 workstation with HP-UX V8.0 or later
• HP-UX (PA)	HP 700 or 800 workstation with HP-UX V8.0 or later
• AIX (RS6000)	IBM RS6000 with AIX V3.1 or later
• RISC/OS (MIPS)	MIPS workstation with RISC/os V4.51 or later
• IRIX (MIPS)	SGI Iris workstation with IRIX V3.3.2 or later.
• NEWS-OS (MIPS)	Sony RISC workstation with NEWS-OS V4.x
• SunOS (SPARC)	Sun SPARC workstation with SunOS V4.0.3 or later

Features

- Implementation of standards.
- Performance and flexibility for LAN-based workgroups.
- Management of large volumes of messages.
- Easy-to-use interface.
- Integration of multiple media through multipart messages.
- Extensibility.

In general, each user on a LAN has a single personal message store for storing his or her own messages. If a user plays more than one role in an organization, such as postmaster and end user, he or she can use a separate message store for each role.

Groups of users, such as a project teams or special interest groups, can set up group message stores instead of distribution lists. Group message stores can be accessed by more than one user at a time, and can serve as bulletin boards or forums for discussion. Group message stores offer the following advantages:

- They ensure that all members of a group see the same messages.
- They can track read and unread messages for each member of the group.
- They keep a common, historical record of all messages.
- They use much less disk space and network bandwidth because separate copies are not distributed to, and stored by, each member of the group.

The following table describes the POSTE components.

POSTE Components and Processes

Related Component	Processes	Purpose
User Agent	POSTE Process	Implements the Motif GUI and interacts with message stores. There is one POSTE process for each POSTE user.
Message Store	mss Process	Manages all the personal and group message stores on a given UNIX system machine. There is an mss process on each machine containing POSTE message stores.
Message Store Registry	msr Process	Stores aliases and distribution lists for all registry users on a LAN. There is one registry per LAN, so one machine in each LAN runs the msr process.
X.400 Gateway	x400gsend, x400grecv Processes	Sends X.400 messages through an X.400 gateway. Receives messages from the X.400 gateway, and places them in POSTE message stores. There is one x400gsend process and one x400grecv process on each machine containing a third–party X.400 gateway API.
INTERNET Gateway	inetgrecv Program	Sends messages to, and receives messages from, POSTE users and users of other UNIX system mail programs. The sendmail or mmdf transport agent invokes inetgrecv to deliver incoming mail to either POSTE users or other UNIX system mail users, depending on whether or not the recipient is listed in the message store registry.

Ordering Information

Alfalfa POSTE Order Codes

Option	Order Code
Personal Use License (packages include license, documentation, and one copy of media)	
for SCO	QB-MM1AN-WA
for ULTRIX	QB-MM1AL-WA
for Domain/OS	QB-MM1AP-WA
for HP–UXPA	QB-MM1AH-WA
for HP–UX68K	QB-MM1AK-WA
for AIX	QB-MM1AA-WA
for RISC/OS	QB-MM1AR-WA
for IRIX	QB-MM1AG-WA
for NEWS-OS	QB-MM1AT-WA
for SunOS	QB-MM1AS-WA

Alfalfa POSTE Order Codes (Continued)	
Option	**Order Code**
X.400 Mail on SCO	
Alfalfa POSTE X.400 Gateway for SCO	QB-MMSAN-WA
Retix OpenServer 400 for SCO	QB-XDTAD-WA
X.400 Mail on ULTRIX	
Alfalfa POSTE X.400 Gateway for ULTRIX	QB-MM5AL-WA

8

Network Management Solutions

This section contains the following topics:

Manageability: Management Products	**8-1**
DECmcc Family of Management Products	**8-5**
Additional Network Management Products	**8-15**
Network Security	**8-37**

Network Management Solutions

Manageability is critical for assuring optimum value and performance from the customer's telecommunications and information resources. Digital's approach to network management provides the right level of information availability and security, flexibility, reduced cost of operations, investment protection, and vendor service capabilities.

Four key principles guide Digital's strategy:

- Build a network that takes an active and intelligent role in network management.
- Add network management applications that provide information for management decisions.
- Develop strategic vendor relationships in key technology areas.
- Provide innovative support services, consulting, and a management relationship (▲ refer to Section 8 for more information).

Integrated Network Management

Digital integrates network management operations into the network itself to keep your applications and your enterprise running despite changes in the network. For example, the network automatically collects and stores data about itself, reports on network events, and takes action based on this information. You can access this information and make online adjustments from anywhere on the network — not just from one central site. With the inherent management capabilities of DECnet, traffic is automatically rerouted when links go down. Additionally, DECnet also provides the Network Control Program (NCP), a management utility, on every node in the network.

Digital follows this integrated network management strategy in all of its network products from terminal servers and bridges to ADVANTAGE-NETWORKS.

Advanced Management Applications

Digital offers advanced network management applications that perform higher-level tasks, integrating network information, loading it into databases, and presenting it to the network manager in easy-to-understand graphic formats. The network automatically provides essential data needed by these advanced applications. Details of these management products are contained in the following sections:

- DECmcc Family of Management Products
- DECmcc Management Station for ULTRIX
- Additional Network Management Products
- 802.3/Ethernet Encryption Device for Security

Strategic Vendor Relationships

A broad spectrum of skills and technologies goes into building today's networked computing environments. Accordingly, Digital's enterprise information strategy does not focus simply on management of our own products, but on integrated multivendor management solutions. Digital develops strategic business relationships with leading vendors to ensure a wide range of compatible solutions for our customers.

Members of the DECmcc Strategic Vendor Program include

- Alcatel Business Systems
- Apple Computer
- Applitek Corporation
- ASCOM, AG
- Bolt, Barenek, and Newman (BBN Communications)
- British Telecom
- Cabletron Systems
- Chipcom Corporation
- Microsoft Corporation
- Motorola/Codex Corporation
- Newbridge Networks
- Olivetti Systems and Networks
- Proteon
- StrataCom
- Synoptics
- System Center Inc.
- Technically Elite Concepts
- Vitalink Communications Corporation
- Wellfleet Communications

Digital's relationship with members of the DECmcc Strategic Vendor Program ranges across the following activities:

- Helping the vendors build DECmcc Access Modules
- Including vendor's private SNMP MIB extensions with the DECmcc TCP/IP SNMP AM
- Establishing a joint development agreement to enhance both the strategic vendor's and Digital's management systems
- Agreeing to provide DECmcc to vendors who select the DECmcc Director platform as the basis for building value-added management applications, as a DECmcc OEM.

The relationship with several of these vendors is detailed in the following sections.

Joint Development Relationships

- British Telecom is working with Digital to implement OSI management through standards endorsed by the Network Management Forum. Interoperability between DECmcc and Concert will enable customers to manage both private and public networks from a single workstation.
- Systems Center Inc. and Digital are building management products that will provide customers with the ability to manage SNA networks from DECmcc and to manage a large array of other multivendor networks from NetView or NET/MASTER.

DECmcc OEM Relationships

- Alcatel Business Systems is building management modules that will monitor and control their PBXs, enabling the management of both voice and data from the DECmcc platform.
- BBN Communications is developing a network management system to monitor and control both packet switching and router-based networks. BBN is also developing value-added applications in the areas of network configuration, management reporting, and analysis tools.
- Olivetti Systems and Networks is porting DECmcc to UNIX System V Release 4, which will run on any Intel-based 486 PC. In addition, Olivetti's PC LANs and networking products will be managed via DECmcc.

Complete Services Portfolio

Digital's complete services portfolio — ranging from on-demand remote telephone support to total management responsibility — can help solve problems at any stage in your network's growth and development: planning, design, cable layouts, implementation, start-up, ongoing operations, maintenance, and training.
▲ See Section 8 for more details on Network Services.

Digital's Enterprise Management Architecture (EMA)

In the past, network management has focused on the fault and performance management of the physical links — modems, cables, multiplexers, and so forth. But, Digital understands that *enterprise management* needs to go beyond voice and data networks, to the management of the systems, applications, and data that reside on the network.

Digital is not alone in its pursuit of comprehensive enterprise management solutions. Digital is a leading contributor to the International Standards Organization's (ISO) Open System Interconnection (OSI) management standards. In addition, because no one vendor can solve this total enterprise management problem, Digital has created an open and extensive architecture and is working with the members of the DECmcc Strategic Vendor Program to insure a comprehensive multivendor solution. Many of these vendors are writing Access Modules for their specific software and hardware devices so that they can be managed from the DECmcc Director Platform using the same consistent user interface and common management information database.

Digital's Enterprise Management Architecture provides for a modular "plug-and-play" structure with four primary components:

- The EMA executive provides the operating environment and the open interfaces required for managing in the multivendor environment. It also provides a Management Information Repository (MIR) that collects data and stores it efficiently in a consistent format.
- Access Modules provide the link to manage any "entity" across the network. It implements the specific management protocols used by the various entities.
- Functional Modules are "plug-in" applications that address the five OSI management areas of Configuration, Fault, Performance, Accounting and Security.
- Presentation Modules integrate all this information through a common user interface.

The first implementation of EMA is through the new DECmcc Family of Management Products which are described in the following figure.

DECmcc Configuration

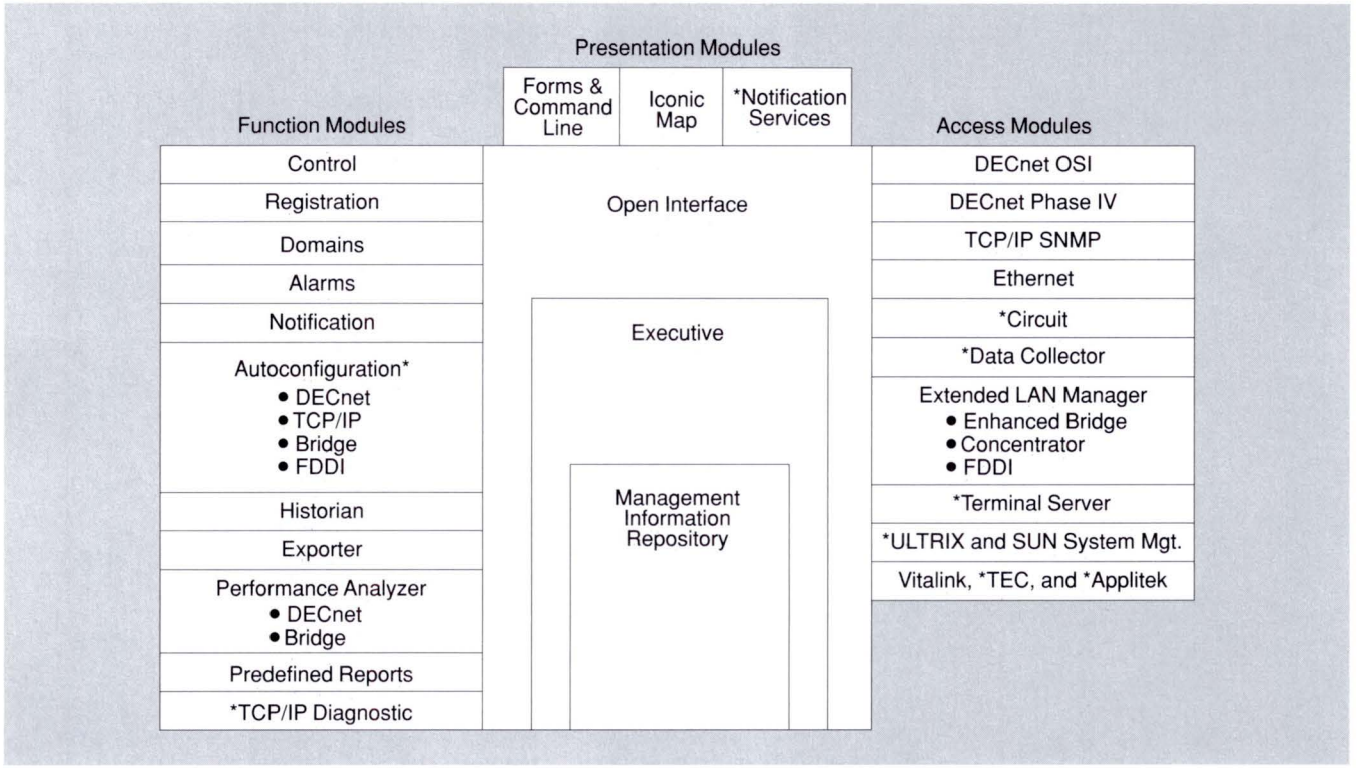

TBG-155-01

The DECmcc family of software offers systems and network management for multivendor computing environments. It can span domains that range from a single-site department to a global enterprise. Since it is based on published application interfaces defined by Digital's Enterprise Management Architecture (EMA), DECmcc isn't limited to system and network management; it can be extended to any manageable entity that can be reached through the data network, from a PBX to a building's air conditioning.

DECmcc runs on VMS and ULTRIX platforms, but can manage multivendor systems because

- DECmcc uses industry standard protocols, such as SNMP
- Digital's ADVANTAGE-NETWORKS give ULTRIX and VMS systems TCP/IP, OSI, and DECnet communications all at once

Digital's Network Environment spans the gamut of connectivity technology, including Ethernet, LAN bridges, terminal servers, routers, smart-hubs, FDDI, and a variety of communications devices.

The modularity of DECmcc allows for the gradual implemention of a management system. For example, a system manager can start from a narrow management focus, such as SNMP and then expand in simple steps to manage VMS systems, ULTRIX systems, DECnet networks, and IBM SNA networks.

Features

- Integrates management of enterprise assets, including systems, networks, and virtually everything connected to the network.
- Offers highly competitive SNMP capabilities for managing networks with a growing multivendor population of SNMP-manageable devices.
- Includes an extensive alarm and notification capability to keep systems and networks operating at maximum efficiency.
- Runs on multiple operating systems, including VAX VMS and RISC ULTRIX, with UNIX System V/Release 4 and DEC OSF/1 versions in the near future.

EMA — the Framework

DECmcc is built on a framework called the Enterprise Management Architecture (EMA).

The EMA model divides enterprise management into two basic components:

- Entities, which are the things to be managed, communicate with the director according to a specified management protocol
- Directors, which are the management systems

An EMA-compliant director is built with the following components:

- The *executive*, which provides the operating environment for managing the diverse needs of an enterprise; it also provides the management information repository that stores data on managed entities
- *Application Programming Interface* (API) for "plugging" modules into the executive
- *Access Modules*, which are the link from the EMA Director to entities, such as computer systems, terminal servers, modems, and other manageable objects; AMs speak the appropriate protocols and provide the necessary translation

- *Functional Modules*, which are applications from Digital and other vendors that offer such functions as configuration management, performance analysis, and fault alarming for all manageable entities
- *Presentation Modules*, which integrate all of the information being managed into a common user interface, allowing any number of presentation devices and styles

DECmcc Packages

Management requirements depend on the size, extent, and complexity of a computing environment. Often, one pre-configured management system will not serve the whole range of management demands economically which is why the modularity of DECmcc is so beneficial.

Digital offers three DECmcc packages, each offering a different level of implementation.



DECmcc Director

The DECmcc Director package is a low-cost, entry-level solution for managing ADVANTAGE-NETWORKS. It is available on both VAX VMS and RISC ULTRIX systems.

The DECmcc Director can register DECnet, OSI, and TCP/IP entities, separate them into manageable domains, display a map of the network, and use the DECwindows-based iconic map interface and pull-down menus to control and modify the systems in the network.

DECmcc Basic Management System

DECmcc Basic Management System (BMS) includes the DECmcc Director and adds local area network components and a number of powerful management applications. It is available on VAX VMS and RISC ULTRIX platforms.

The DECmcc BMS can automatically configure a network, monitor the network and create alarms, calculate network performance statistics, store and export historical management data, and be notified when alarm conditions occur.

DECmcc Enterprise Management Station

The DECmcc Enterprise Management Station (EMS) is a fully-loaded software package that includes most of Digital's EMA-based modules. Available only on VMS systems, EMS also includes older, pre-EMA management tools, such as VAX ETHERnim, TSM and LTM, which give VMS systems additional traffic monitoring and reporting capabilities.

With its enhanced Bridge, Concentrator, FDDI, and terminal server support, EMS enables the entire Digital Network Environment to be managed from a single, integrated system.

Option Packages Let You Buy Only What You Need

Digital offers DECmcc option packages that target specific management functions. These packages are included with BMS and EMS, but are also available separately.

- *Configuration* — Permits automatic discovery, registration, and mapping of network objects
- *Notification* — Creates alarm rules, collecting events, and providing customized notification techniques related to conditions anywhere in the network

- *Historical Data* — Collects data over time for developing customized reports to track and tune system and network performance
- *Performance Statistics* — Calculates automatically meaningful statistics for DECnet and TCP/IP networks and LAN Bridges.
- *Fault Diagnostics* — Assists in diagnosing TCP/IP network problems
- *Extended LAN Manager* — Manages Digital's LAN Bridge and FDDI products (Access Module and Function Module sets available separately)
- *Terminal Server Access Module* — Manages Digital's Terminal Server products

Because DECmcc uses EMA's published, open interface standards, modules from other vendors are also available. These include DECmcc Access Modules for managing Vitalink's Bridges, Technically Elite Concepts' Network Professor NetPods, and Applitek's Ethernet over CATV products (US only).

DECmcc Packages	Order Number	Presentation Modules	Access Modules									Function Modules													VMS Point Products			
	VMS ULTRIX/RISC	Forms[1] & CL Iconic Map Notification PM	DECnet Phase IV DECnet OSI TCP/IP SNMP 802.3/Ethernet Circuit Data Collector Enhanced Bridge Concentrator FDDI Terminal Server									Control Registration Domains Autoconfiguration – DECnet – TCP/IP – Bridge – FDDI Alarms Notification FM Historian Explorer DECnet/Bridge PA TCP/IP PA Predefined Reports TCP/IP Diag Assist											ETHERnim LTM TSM Nwt Trouble Guide			
DECmcc Director	QL-VM9A9-AA QL-GU3A8-AA	• •	•	•	•	•	•					•	•	•														
DECmcc Basic Management System (BMS)	QL-YSUA9-AA QL-GU5A8-AA	• • •	•	•	•	•	•	•				•	•	•	•	•	[2]	•	[2]	•	•	•	•	•	•	•		
DECmcc Enterprise[1] Management Station (EMS)	QL-YFVA9-AA	• • •	•	•	•	•	•	•	•	•	•	•	•	•	•	•	•	•	•	•	•	•	•	•	•	•	•	•
DECmcc Option Packages																												
- Configuration	QL-MDJA9-AA/ QL-MDKA8-AA														•	•	•	[2]	•	[2]								
- Fault Diagnostic	QL-MDLA9-AA/ QL-MDMA8-AA																											•
- Historical Data	QL-MDNA9-AA/ QL-MDPA8-AA																						•	•				
- Performance Statistics	QL-MDQA9-AA/ QL-MDRA8-AA																								•	•	•	
- Notification	QL-MDSA9-AA/ QL-MDTA8-AA	•					•												•	•								
DECmcc Extended LAN Manager (ELM) - AM	QL-GX8A9-AA/ QL-MGUA9-AA							•	•	•									•						•	[3]		
- FM	QL-GX9A9-AA/ QL-MGVA9-AA																	•	•									
DECmcc Terminal[1] Server AM (TSAM)	QL-GVTA9-AA										•																	
DECmcc Developer's Toolkit	QL-YSWA9-AA QL-GU7A8-AA																											

[1] VMS only
[2] Requires ELM AM
[3] Only the Bridge PA

TBG–180–00

Management Modules

The structure of EMA is designed to enable an implementation to evolve easily, simply by plugging in new modules with standard interfaces. Modules can always be added as they are needed or as they become available, from Digital and from third parties.

Presentation Modules

Presentation modules (PM) can display and operate across the full range of multivendor elements that make up the enterprise. By referring to information stored in the DECmcc database, presentation modules "know" which commands and attributes are appropriate and available for the entity selected. The same command syntax and interaction style are used for all objects, eliminating the cost of constant re-training.

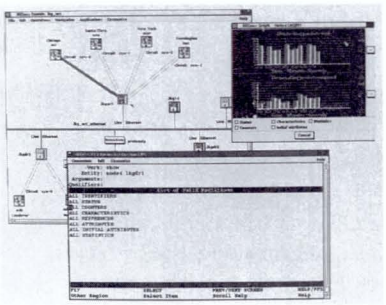

- **Forms and Command Line Interface** — Provides two user-interface options: a DECnet OSI compatible command line interface, known as NCL (Network Command Language); and a forms interface which guides users through command input, assisting on syntax and choosing appropriate options. Input is generally through the keyboard; output is to the terminal, a designated device, or a file. The command line interface is critical for using automated script files and remote dial-in access.
- **Iconic Map** — Offers a great range of input and output capabilities, based on the DECwindows graphics interface. It makes full use of color graphics to enhance management productivity and power, including fully customizable maps of networks. The Iconic Map PM features relationship-driven navigation and, with information provided by Notification Services, displays visual, color-coded alarm and status indicators. Map backgrounds can be any scannable image, including maps and floor plans, and icons can be tailored using a variety of Digital graphic art products. Multiple maps can be displayed simultaneously.
- **Notification Services** — Presents a text window, called a *Notification Window*, which contains information related to an alarm or fault condition. The display scrolls color-coded information across the screen which can be filtered by severity level, object type, or domain location. A summary graph displays the number of events by severity level. At any time an event can be selected and the system automatically provides expanded detail.

Function Modules

Functional Module*s* (FMs) extend the functionality of the Director with applications in the ISO/OSI defined areas of configuration, fault, performance, security, and accounting management.

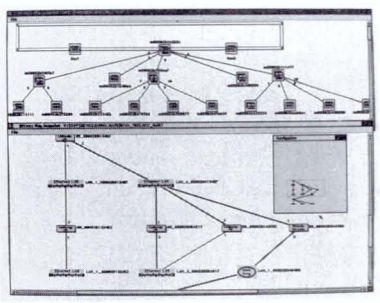

- **Autoconfiguration** — greatly reduces the network manager's effort in loading and updating network data. The Autoconfiguration FM provides automatic discovery, registration, and mapping of the following network objects:
  - TCP/IP nodes
  - DECnet Phase IV nodes
  - Digital's LAN bridges
  - Any device from any vendor connected to an FDDI ring, including Digital's DECbridges and DECconcentrators

- **Registration** — Registers and maintains the set of known entities within the managed environment. The Registration FM will translate entity names to network addresses, allowing reference to entities by easy-to-remember names rather than hexadecimal physical addresses. The Registration FM may optionally use DECdns (distributed name services), so that an entity or domain registered by one DECmcc director is also known to other directors in the network. DECdns also enables the manager to control user access to each domain.
- **Domains** —Collects entities into focused, user-defined groups to establish a span of control or view of the enterprise. Entities can be in multiple domains, and domains can overlap with and contain other domains. By dividing networks into logical and manageable subsets with the Domains FM, management functions can be scaled from small to large networks.
- **Control** — Provides access to the management functions supported by a given device. It translates the device-specific commands into a consistent syntax and provides the capability to perform these actions at any set of specified times.
- **Alarms** — Allows automation of the complex task of monitoring the multivendor network while keeping informed of critical conditions. Alarm conditions are user defined, as well as thresholds for these conditions on any manageable attribute, with the help of rules.

  The Alarms FM is structured to conform with the OSI management standards. It gives the network manager a mechanism for defining alarm rule expressions for multivendor fault management. Alarm rules can be tested on specified entities at specified times (polled alarms), or they can execute when an unexpected fault occurs (unsolicited alarms).
- **Notification** — Enables the full range of alerting capabilities to be used by all other management modules. For example, it supports the display of events from the data collector AM or the change of an icon color associated with the Alarm FM. In other words, the Notification FM offers a generic capability which integrates notification across the DECmcc system.
- **Historian** — Provides an integrated set of facilities for collecting and storing management data over any selected period of time. The Historian FM periodically collects attribute data and records it in the DECmcc database. That data can then be used by the various DECmcc Functional Modules.
- **Exporter** — Moves either real-time data or data collected by the Historian FM to either Rdb or Ingress databases for offline analysis and reporting.
- **Predefined PA Reports** — Provides sample performance analysis reports from data exported to either Rdb or Ingress, using Datatrieve or Ingress ReportWriter.
- **TCP/IP Diagnostic Assistant** — Provides a step-by-step diagnostic procedure to help identify and fix the most common TCP/IP networking problems.
- **DECnet Bridge and TCP/IP Performance Analyzer** — calculates important management statistics on various aspects of network performance such as error rates, throughput, and utilization. It obtains real-time or historically recorded traffic and error data on managed DECnet, LAN Bridge, and TCP/IP entities and processes that data into meaningful statistical information. The software interoperates with the DECmcc Alarms FM and Notification Services PM to permit logging of performance-related alarms, dynamic map updates, and messages to inform the network manager when a performance threshold has been crossed.

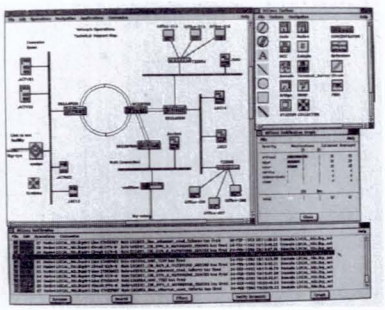

Access Modules

Access Modules (AMs) extend the scope of the Director to manage new entities. AMs provide a bidirectional control and monitoring pathway to manageable entities.

- **TCP/IP SNMP** — Supports the following Internet Advisory Board (IAB) Simple Network Management Protocol (SNMP) RFC's: 1060, 1065, 1066, 1155, 1156, 1157, 1158, 121, and 1213. This includes full MIB II (Management Information Base) support in addition to support for on-site enrollment of vendor-specific MIBs.

  TCP/IP SNMP includes a MIB translation utility that automatically checks, helps debug, translates, and loads ASN.1 Concise MIB format definitions into DECmcc. It also supports SNMP generic traps and PING. Over 30 vendor-specific MIBs are prepackaged with the AM.
- **DECnet Phase IV** — Is the management pathway to control and monitor DECnet Phase IV implementations using the NICE, including nodes, circuits, lines, and objects.
- **DECnet OSI** — Is the management pathway to control and monitor DECnet OSI implementations using Digital's CMIP protocol implementation.
- **Ethernet Station** — Is the pathway to manage any multivendor device on the Ethernet that conforms to Ethernet V2 or ISO 8802–3 (IEEE 802.3) protocols.
- **Terminal Server** — Is the management pathway to control and monitor Digital's terminal server products, including DECserver 90TL, 90L, 100, 200, 250, 300, 500, & 700, and MUXserver 100 & 300.
- **Enhanced Bridge** — Is the management pathway to control and monitor LAN Bridges (100, 150, or 200), and FDDI DECbridges (500 & 600 series). The Enhanced Bridge AM goes beyond the basic Ethernet Station AM capabilities, providing access to bridge attributes such as the forwarding database and filtering.
- **Concentrator** — Is the management pathway to control and monitor Digital's DECconcentrator (500) FDDI concentrator.
- **FDDI** — Is the pathway for managing devices from Digital and other vendors connected to an FDDI ring.
- **Circuit** — Is the pathway that enables lines and circuits to be manageable objects, providing another level of network management control.
- **Data Collector** — Provides a simple approach to integrating other management information from a variety of management applications or devices. Event or alarm information is sent to a remote agent running on any VMS or ULTRIX system and then forwarded to DECmcc.



Prerequisite Hardware

Any valid VAX, MicroVAX, VAXstation, or VAXserver configuration for VMS implementations and any valid DECsystem or DECstation configuration for ULTRIX implementations as specified in the series of DECmcc Software Product Descriptions (SPDs) referenced in the overview SPD 37.19.00.

Prerequisite Software

RISC ULTRIX or VAX VMS operating system, and the layered products specified in SPD 37.19.

▲ Refer to either the System Support Addendum 32.46.00A or 32.48.00A for required versions of prerequisite or optional software.

Ordering Information

To take full advantage of the windowing environment and processing requirements, the minimum suggested hardware requirements are a VAXstation 4000 VLC with a minimum of 24 MB of memory and one RZ56 disk drive; or a DECstation 5000 Model 25 with a minimum of 24 MB of memory, a TZ30 and disk drive expansion box, and one RZ56 disk drive.

DECmcc Director Products Order Codes

Option	Order Code	
	VMS	ULTRIX
DECmcc Director,	QL–VM9A9–AA	QL–GU3A8–AA
DECmcc Basic Management System	QL–YSUA9–AA	QL–GU5A8–AA
DECmcc Enterprise Management Station (EMS)	QL–YFVA9–AA	
DECmcc Option Packages		
Configuration	QL–MDJA9–AA	QL–MDKA8–AA
Fault Diagnostic	QL–MDLA9–AA	QL–MDMA8–AA
Historical Data	QL–MDNA9–AA	QL–MDPA8–AA
Performance Statistics	QL–MDQA9–AA	QL–MDRA8–AA
Notification	QL–MDSA9–AA	QL–MDTA8–AA
DECmcc Extended LAN Manager AM	QL–GX8A9–AA	QL–MGUA9–AA
DECmcc Extended LAN Manager FM	QL–GX9A9–AA	QL–MGVA9–AA
DECmcc Terminal Server AM (TSAM)	QL–GVTA9–AA	

▲ Use the software order code template in Section 5 when building an order code number from the software Unique Product Identifier (UPI). Refer to the Software Product Description (SPD), or consult your local sales representative to determine whether the software application ordered is supported by the processor for which it is intended.

▲ Refer to the following sources for further information on recommended configurations, supported processors, and services:

- Software Product Description 37.19.xx (DECmcc Product Family V1.2), 32.46.xx (Director), 32.48.xx (BMS), 31.88.xx (EMS), 39.71.xx (Configuration), 39.75.xx (Notification), 39.73.xx (Historical Data), 39.74.xx (Performance Statistics), 39.72.xx (Fault Diagnostic), 31.26.xx (Terminal Server), 31.33.xx (ELM AM and FM on VMS), and 38.67.xx (ELM AM and FM on ULTRIX)
- VMS Unique Product Identifier VM9 (Director), YSU (BMS), YFV (EMS), MDJ (Configuration), MDS (Notification), MDN (Historical Data), MDQ (Performance Statistics), MDL (Fault Diagnostic), GVT (Terminal Server), GX8 (ELM AM), and GX9 (ELM FM)

- ULTRIX Unique Product Identifier GU3 (Director), GU5 (BMS), MDK (Configuration), MDT (Notification), MDP (Historical Data), MDR (Performance Statistics), MDM (Fault Diagnostic), MGU (ELM AM), and MGV (ELM FM)

DECmcc Developer's Toolkit

The DECmcc Developer's Toolkit provides a step-by-step process to assist both strategic vendors and customers in the writing, designing and testing of management module software for EMA compliance. V1.2 of the toolkit addresses the development of DECmcc Access Modules (AMs) and Function Modules (FMs) on both ULTRIX and VMS. The following documentation and software tools are included in the toolkit:

Documentation

- *DECmcc Systems Reference Manual* (SRM) — Provides the technical specification of the interfaces available to management module developers and defines the services provided to these modules by the DECmcc Director, and is orderable separately.
- *DECmcc Toolkit Reference Manual* — Describes how to use the toolkit.
- *Guide to Writing Management Modules* — A tutorial document that describes how to write an AM or FM.

Software Utilities

- Management Specification Language (MSL) Translator utility — Takes a developer's management specification, interprets it, and produces a command file for the DAP utility.
- Dictionary Administrator Program (DAP) utility — Populates the DECmcc dictionary with MSL information about the modules to be managed.
- Test Bed Driver (TBD) utility — Provides a direct interface for debugging by bypassing the dictionary, and lets users directly observe and manipulate their modules.
- Help File Builder (HFB) utility — Merges management module help files into a central DECmcc help file.
- Design framework software — Automatically builds a "starter AM" or "starter FM" based on template files.
- Sample AM — An access module that supports a subset of the DECnet Phase IV node entity and consists of both a global entity (a node) and one subentity (a line).
- Example FM — Provides an example of a simple FM. Augments the sample AM by providing response timing functionality.

Potential developers wishing to obtain more information on the toolkit can call in the U.S. (800) DECINFO.

Prerequisite Hardware

▲ Refer to the DECmcc Director and DECmcc Basic Management System product descriptions in this section.

Prerequisite Software

▲ Refer to the DECmcc Director and DECmcc Basic Management System product descriptions in this section.

Ordering Information

DECmcc Developer's Toolkit Order Codes		
Option	**Order Code**	
	VMS	**ULTRIX**
DECmcc Developer's Toolkit	QL–YSWA9–AA	QL–GU7A8–AA

▲ Use the software order code template in Section 5 when building an order code number from the software's Unique Product Identifier (UPI). Refer to the Software Product Description (SPD), or consult your local sales representative to determine whether the software application ordered is supported by the processor for which it is intended.

▲ Refer to the following for further information on recommended configurations, supported processors, and services:

- Software Product Description 32.49.xx
- Unique Product Identifier YSW for VMS and GU7 for ULTRIX

Overview

Additional Digital network management products include

- DECmcc Management Station for ULTRIX (MSU) V1.1 — Provides network management for a variety of protocols, but is structured around the Simple Network Management Protocol (SNMP) and TCP/IP networks. This is Digital's SNMP-manager product.
- The Terminal Server Manager (TSM) — Provides configuration and fault management of terminal servers in an extended 802.3/Ethernet local area network.
- DECelms — Offers extended LAN management software.
- DECmcc Extended LAN Manager — Provides network management for new and existing IEEE 802.3/Ethernet and FDDI products via the EMA-compliant DECmcc Director family of products.
- LAN Traffic Monitor (LTM) — A management tool for measuring bandwidth utilization on multivendor 802.3/Ethernet local area networks.
- NMCC VAX ETHERnim — A fault isolation and configuration management tool for extended 802.3/Ethernet local area networks.
- NMCC/DECnet Monitor — A wide area network performance, fault, and configuration management tool for DECnet products.
- DECmcc WANdesigner — A network design tool for Digital's wide area networks.
- TokenVIEW Plus — Provides network management for 4 Mb/s and 16 Mb/s 802.5/Token Ring networks using a DOS based PC.
- The Remote System Manager (RSM) — Provides application and configuration management for multiple, distributed MicroVAX and/or VAXstation systems

DECmcc Management Station for ULTRIX (MSU) V1.1



The DECmcc Management Station for ULTRIX V1.1 (MSU) is an ULTRIX based network management layered software product that facilitates the management of network devices using a variety of remote management protocols. The product is structured around the TCP/IP industry-standard Simple Network Management Protocol (SNMP). It also provides support for the management of DECnet Phase IV devices, Digital Terminal Servers, LAN Bridges, and FDDI DECbridges and DECconcentrators.

Features

- Provides TCP/IP management with full SNMP support (SET/SHOW/TRAPS) of MIB II and a large number of vendor extensions, an MIB compiler to add new MIBs, an IP path trace facility, and PING (ICMP) support.
- Manages DECnet Phase IV using NICE protocol, Digital Terminal Servers using MOP protocol, Digital LAN Bridges using the RBMS/ELMS protocol, and FDDI DECbridges and DECconcentrators using the SNMP or RBMS/ELMS protocols.
- Displays an iconic map that includes a graphic editor, uses colors to represent device and interface status of TCP/IP and DECnet devices, and groups devices into multilevels of domains.
- Provides Autotopology function for TCP/IP and DECnet Phase IV devices.

- Includes real-time monitoring applications to graph values of TCP/IP MIB attributes and local Ethernet segment statistics.
- Threshold alarms may be triggered on TCP/IP MIB attributes.
- A Notification feature allows actions such as setting off a beeper, mail notification, or application initiation, triggered by user-defined alarms.
- Values of TCP/IP MIB attributes are recorded in an ULTRIX SQL database, providing data for a number of preprogrammed reports.
- Includes an Alarm Window with Scroll and Search functions to recall alarms and events of interest.
- A Device Availability feature displays the current status of TCP/IP and DECnet devices.
- A Command Scripting feature allows the recording of commands into a file, replaying them later to make complex or repetitive commands easier to perform.
- Other third-party or customer applications can be added and then launched from the main map pull-down menus.
- A Device Locater allows finding devices by specifying group, status, device type, or name.
- Remote SNMP and DECnet Polling, and Remote MAP Access daemons allow MSU to operate in a distributed management environment.

Prerequisite Hardware

- Most Digital RISC or VAX systems running the ULTRIX operating system, with access from a DECwindows compatible color terminal — check with the Software Supply Business (SSB) or your local Digital representative for the latest list of supported hardware.
- A minimum of 16 MB of memory is required for small networks and 24 MB is recommended for larger networks. 100 MB of disk space are required for installation, 250 MB are recommended for use.

Performance Guidelines

The minimum configuration is sufficient to support small networks; larger networks need additional memory, CPU power, and disk space. A high-performance configuration suggestion includes a DECstation 5000 Model 200PX with 24 MB of memory, and an RZ56 (665 MB) disk drive. For networks of over 10,000 devices, be sure to go over the configuration with a Digital sales representative.

Prerequisite Software

- ULTRIX 4.1 or 4.2 and related version of ULTRIX SQL
  Note: ULTRIX SQL license comes with ULTRIX, but Media and Documentation must be ordered separately.
  - Documentation Kit: QA-YHTAA-GZ
  - Media: QA-YHTAx-xx
- DECnet ULTRIX is required for management of DECnet devices or Digital Terminal Servers.

Ordering Information

DECmcc Management Station for ULTRIX Order Codes	
Option	**Order Code**
DECmcc Management Station for ULTRIX (RISC)	QL-YUGA8-AA
Media (TK50) and documentation	QL-YUGAB-H5
Documentation	QL-YUGAB-GZ
Installation	QL-YUGA8-I9
DECmcc Management Station for ULTRIX (VAX)	QL-YU1A9-AA
Media (TK50) and documentation	QL-YUIAA-H5
Documentation	QL-YU1AA-GZ
Installation	QL-YU1A9-I9

▲ Refer to the following sources for further information on supported processors and services:

- Software Product Description 33.18.01
- Unique Product Identifiers YUG and YU1

Terminal Server Manager V1.4

The Terminal Server Manager VMS (TSM) is a software tool that allows a user at a VAX host to remotely observe and control terminal servers anywhere in the extended local area network. The user can monitor the availability and modify the characteristics of all Digital terminal servers on the network. Domains of servers can be defined, allowing group operations to be performed. ▲ Refer to Section 2, "802.3/Ethernet Communications Servers," for more information.

DECelms V1.1



DECelms enables a network manager at a remote VMS Management Station to manage, monitor, control, and troubleshoot Digital network devices on hybrid 802.3/Ethernet and FDDI extended local area networks (LANs).

DECelms is a superset of Remote Bridge Management Software (RBMS) V2.0 that offers increased functionality and improved interface commands for minimal user retraining. It is a replacement for RBMS V2.0 and replaces RBMS on DECmcc network management stations. DECelms accepts RBMS, DECmcc Enterprise Management Station, DECmcc Site Management Station, and DECelms as valid licenses.

Features

- Manages extended FDDI and IEEE 802.3/Ethernet networks and attached devices with one software product from a single location.
- Supports features and functions of the fiber-based DECconcentrator 500, DECbridge 500 model, LAN Bridge 200, LAN Bridge 150, LAN Bridge 100, METROWAVE Bridge, and Chipcom Ethermodem device.
- Automatically builds a registry of all reachable devices, including newly added bridges or DECconcentrator 500 devices for improved network operation and topology management.

- Polls devices in the registry automatically (or manually) for faults, errors, and changed information, and promoting network integrity.
- Displays errors in the alarms window of the management station and writes detailed information in the error log file for historical network analysis.
- Provides SMT management functions for stations on the FDDI ring that implement ANSI SMT.
- Provides ring mapping capabilities that allow users to see how FDDI systems are logically connected in the FDDI topology.
- Allows users to remotely invoke device self-test procedures and obtain current backup and restore device status information.
- Simplifies monitoring of hybrid FDDI and 802.3/Ethernet networks; displays information from all supported products in an easy-to-read format; supports on-line help, up- and down-scrolling, and implements the search command within the data display.
- Allows display and modification of DECconcentrator 500 devices, bridges, lines, physical ports, and facilitates forwarding database entries.
- Allows network managers to name and refer to network devices with convenient, easy-to-remember ASCII names instead of complex network addresses.
- Remotely configures a LAN Bridge 100 or LAN Bridge 150 as an 802.3/Ethernet network monitor device with optional LAN Traffic Monitor software.

Network Management Capabilities

DECelms software provides network control for FDDI and 802.3/Ethernet networks linked via the DECbridge 500 model. Network managers can use DECelms to modify bridge and DECconcentrator 500 parameters and greatly improve the manageability and performance of interoperable 802.3/Ethernet and FDDI networks.

DECelms software runs on VMS host systems, and corresponding firmware resides in the target network devices. Digital 802.3/Ethernet bridges managed by DECelms are located on the extended 802.3/Ethernet network. DECbridge 500 model bridges reside between an 802.3/Ethernet network and an FDDI LAN, while DECconcentrator 500 devices reside on the FDDI network and communicate transparently with the 802.3/Ethernet LAN through one or more DECbridge 500 units.

Although Digital network devices do not require DECelms software and can provide basic device functionality without it, DECelms provides superior flexibility in configuring, monitoring, and controlling extended networks containing 802.3/Ethernet bridges, 802.3/Ethernet-to-FDDI bridges, and FDDI concentrators. Many important DECbridge 500 functions, such as password protection and address/protocol filtering, are implemented through DECelms.

A full-function superset of its predecessor, RBMS V2.0, DECelms adds additional features and capabilities for managing the DECbridge 500 model and fiber-based DECconcentrator 500 devices.

Licensing and Hardware Prerequisites

DECelms is fully supported when installed on any VAX or MicroVAX system, or any VAXstation system running VMS V5.2 or later in an extended LAN. ▲ Refer to DECelms Software Product Description 31.79.00 for information on software version and hardware requirements.

Customers can manage their FDDI and 802.3/Ethernet extended local area networks with DECelms running on a suitably configured network. For example, DECelms control of FDDI network devices can be managed from an 802.3/Ethernet LAN that is connected to an FDDI network through a DECbridge 500 and a DECconcentrator 500. ▲ Refer to the DECelms Software Product Description 31.79.00 for more information on configuration guidelines.

DECelms also allows the user to remotely configure a LAN Bridge 100 or LAN Bridge 150 as an 802.3/Ethernet network monitor device with optional LAN Traffic Monitor software.

Ordering Information

DECelms Order Codes

Option	Order Code
DECelms User License	QL-YFPA9-AA
DECelms RTC UPI	QL-YFPA9-HZ
DECelms TK50 Hkit	QA-YFPAA-H5
DECelms 16MT9 Hkit	QA-YFPAA-HM
DECelms V1.0 Doc Set	QA-YFPAA-GZ

DECmcc Extended LAN Manager V1.2

DECmcc Extended LAN Manager is a VMS or ULTRIX based network management software product that allows users to manage all of their Digital FDDI and 802.3/Ethernet bridge products and DECconcentrator 500 devices from any of the following DECmcc configurations:

- DECmcc Director (license included with DECnet VAX)
- DECmcc Basic Management System (BMS)
- DECmcc Enterprise Management Station (EMS)

DECmcc Extended LAN Manager comprises new DECmcc modules that provide network management support for LAN Bridges, DECbridges and DECconcentrators. It offers functionality that is a superset of DECelms management software.

Digital's FDDI and IEEE 802.3/Ethernet bridge products and the DECconcentrator 500 are self-operating and self-managing. DECmcc Extended LAN Manager software significantly enhances operations by enabling a network manager to configure, monitor, control, and troubleshoot these devices from a single station, and to implement many important bridge and concentrator functions.

Two DECmcc Extended LAN Manager *license* packages are available:

- DECmcc Extended LAN Manager Access Module (AM) license package enables users to take full advantage of DECmcc capabilities to register, monitor and control supported FDDI devices. The AM package contains the licenses for the FDDI Concentrator AM, Enhanced Bridge AM, FDDI AM, Bridge Performance Analyzer and Alarms, and is available for either VMS or ULTRIX RISC. The Performance Analyzer is tailored to support only DECbridge and LAN Bridge devices.
- DECmcc Extended LAN Manager Functional Module (FM) license package is used in conjunction with the AM package to provide automatic device registration, FDDI ring map autotopology and LAN Bridge spanning tree autotopology, supporting LAN Bridge 100 and IEEE 802.1d spanning tree protocols. The FM license package contains the licenses for Bridge Spanning Tree Autotopology Map FM and FDDI Ring Map Autotopology FM, and is available for either VMS or ULTRIX RISC.

Features

DECmcc Extended LAN Manager V1.2 provides the network manager with significantly improved diagnostic tools, including

- A device listener that automatically identifies bridges and concentrators and registers these devices in the DECmcc Extended LAN Manager database.
- FDDI ring mapping, with automatic registration in the DECmcc registry, of Digital and multivendor FDDI devices, displaying critical management information.
- A bridge-spanning tree autotopology that maps Digital's LAN Bridges and DECbridges, and automatically registers them in the DECmcc registry.
- The DECmcc Extended LAN Manager AM, which supports the management of any Digital DECbridge 5xx, DECbridge 6xx, Digital's LAN Bridge products, DECconcentrator 500, and third party FDDI devices that conform to ANSI standards (refer to SPDs 31.33.xx and 38.67.xx).

The DECmcc Extended LAN Manager allows a network manager to perform the following functions:

- Display and modify devices, lines, physical ports, protocol database, and forwarding database characteristics.
- Enable and disable lines and physical ports.
- Customize site-specific alarms to notify the network manager of faults, errors, and changed information.
- Display data-link counters, status, and characteristics.
- Modify parameters: operational state, protocol database, forwarding database, and Spanning Tree characteristics.
- Remotely invoke device self-test capabilities.
- Load and modify address and protocol filtering tables in the DEC-bridge 500/600 series and LAN Bridge 200.
- Display 802.3/Ethernet network utilization statistics (DECbridge 500/600 series and LAN Bridge 200).
- Disable the automatic learning capability of the DECbridge 500/600 series and LAN Bridge 200 to allow manual creation of a bridge address table.
- Remotely configure a LAN Bridge 100 or LAN Bridge 150 as an 802.3/Ethernet network monitor device with optional LAN Traffic Monitor software.

The table on the next page provides a comparison of Digital's extended LAN management solutions. For more detailed information about each product listed, please refer to the individual software product descriptions (SPDs).

Note: DECelms remains an optional, low-cost point product solution for customers with Ethernet/802.3 bridge products, non-copper based FDDI solutions, and DECbridge 500 model devices.

Digital's Extended LAN Mangement Solutions

	DECmcc Director, using TCP/IP SNMP AM V1.2[1]	<—DECmcc Extended—> LAN Manager V1.2			DECmcc MSU V1.1	DECelms V1.1
		Director	BMS	EMS		
Devices Supported						
DECbridge 500	Yes[2]	Yes	Yes	Yes	Yes[2]	Yes
DECbridge 51x/52x	Yes	Yes	Yes	Yes	Yes	No
DECbridge 6xx series	Yes	Yes	Yes	Yes	Yes	No
DECconcentrator 500	Yes	Yes	Yes	Yes	Yes	Yes[3]
LAN Bridge 100/150/200	No	Yes	Yes	Yes	Yes	Yes
METROWAVE Bridge	No	Yes	Yes	Yes	Yes	Yes
Chipcom Ethermodem III	No	Yes	Yes	Yes	Yes	Yes
Automatic Device Registration	Opt[4]	Opt	Yes	Yes	Yes[4]	Yes
FDDI Ring Mapping	No	Opt	Yes	Yes	No	Yes
Bridge Mapping	No	Opt	Yes	Yes	No	No
Polling/Alarms	Opt[5]	Yes	Yes	Yes	Opt[5,6]	Yes
Trend Analysis	Opt[5]	Opt[7]	Yes	Yes	Yes[5]	No
802.3/Ethernet Performance Statistics	No	Yes	Yes	Yes	No	Yes
Native DECwindows Support	Yes	Yes	Yes	Yes	Yes	No
Operating System Support	VMS ULTRIX	<—VMS ULTRIX—>			ULTRIX	VMS
Management Protocol	SNMP	<—RBMS/SNMP—>			RBMS/ SNMP	RBMS

[1]Without DECmcc Extended LAN Manager.

[2]"Shows" (or "gets") only.

[3]Fiber options.

[4]If SNMP-based devices are running IP, the IP autotopology will run and locate devices.

[5]SNMP-based devices.

[6]Ingres Base System Tools for ULTRIX SQL (VAX: QB-YVAA-*T5, RISC: QB-YVBA*-T5) or Ingres SQL C V6 ULTRIX SQL Preprocessor (VAX: QB-YVGA*-T5, RISC: QB-YVLA*-T5).

[7]DECmcc Historian option package; other "opt" in this column refer to DECmcc Extended LAN Manager V1.2 FM license.

Migration to Extended LAN Manager V1.2

All licensed DECmcc EMS customers with Software Product Services Media and Documentation Distribution Service (SPS MDDS) will receive DECmcc Extended LAN Manager V1.2 with the next release of DECmcc EMS V2.2.

All existing licensed DECmcc Director, BMS, and Extended LAN Manager V1.0 customers with SPS MDDS will receive DECmcc Extended LAN Manager V1.2 via the normal service delivery channel.

All existing licensed DECelms customers will have the option to purchase DECmcc Extended LAN Manager modules, either on a standalone basis (requires DECmcc Director), or as part of a DECmcc BMS or EMS package at a reduced license fee (EMS is only available on VMS).

DECmcc SMS/EMS customers without valid SPS who require FDDI management should purchase the update.

The following table describes the products and services you need to order for easy migration to the Extended LAN Manager V1.2.

Migrating to Extended LAN Manager V1.2	
If you have	**You need to order**
DECelms	One of the following: • DECmcc Extended LAN Manager AM and (optional) FM license packages and Hkit, plus DECmcc Director V1.2 and Hkit • DECmcc BMS V1.2 and DECmcc Extended LAN Manager AM license package and Hkit • DECmcc EMS V2.2 (VMS only) license and Hkit
DECmcc Director	Both of the following: • DECmcc Extended LAN Manager V1.2 AM and optional FM license packages • A new DECmcc Director V1.2 Hkit
DECmcc BMS with MDDS service	A program will be established to ensure that • Customers who have purchased DECmcc BMS prior to April 14, 1992 will receive the new DECmcc Extended LAN Manager AM license package • Existing DECmcc customers will automatically receive the DECmcc Extended LAN Manager V1.2 FM license for DECmcc BMS V1.2 Customers who purchase DECmcc BMS after April 14, 1992 need to purchase the DECmcc Extended LAN Manager AM license and Hkit
DECmcc BMS with no service	DECmcc Extended LAN Manager V1.2 AM license and Hkit
DECmcc SMS or EMS with MDDS service	Automatically receive DECmcc Extended LAN Manager V1.2 in DECmcc EMS V2.2 (VMS only)
DECmcc SMS or EMS with no service	EMS Update License and Hkit (VMS only)

Prerequisite Hardware

DECmcc Extended LAN Manager resides on a VAX VMS or ULTRIX RISC host with corresponding management firmware resident in Digital's LAN Bridge, DECbridge, and DECconcentrator devices.

Prerequisite Software

The VMS operating system V5.4 (or higher) or the ULTRIX Operating System V4.2 (or higher) is required to run DECmcc Extended LAN Manager V1.2, plus one of the following configurations:

- For DECmcc Extended LAN Manager AM, the DECmcc Director V1.2 is required.
- For the DECmcc Extended LAN Manager FM, the DECmcc Director V1.2 and the DECmcc Extended LAN Manager AM package are required.

The DECmcc Basic Management System (BMS) includes the DECmcc Extended LAN Manager FM package. To utilize the capabilities of the DECmcc Extended LAN Manager FM package, the DECmcc Extended LAN Manager AM is required, and must be purchased separately.

The DECmcc Enterprise Management Station (EMS) includes the DECmcc Extended LAN Manager AM and FM. The DECmcc Enterprise Management Station is not available for ULTRIX. ▲ Refer to the DECmcc Extended LAN Manager System Support Addendum (SSA 31.33.02–x for VMS and SSA 38.67.00–x) for more details.

▲ For further information, refer to the following Software Product Descriptions:

- DECmcc Extended LAN Manager (AM and FM) for VAX VMS, Version 1.2, SPD 31.33.02
- DECmcc Extended LAN Manager (AM and FM) for RISC ULTRIX, Version 1.2, SPD 38.67.00
- DECmcc Director Product Family 37.19.00

Ordering Information

DECmcc Extended LAN Manager Order Codes	
Option	**Order Code**
DECmcc Extended LAN Manager AM License for VMS	QL-GX8A9-AA
DECmcc Extended LAN Manager FM License for VMS	QL-GX9A9-AA
DECmcc Extended LAN Manager TK50 Hkit for VMS	QA-GX8AA-H5
DECmcc Extended LAN Manager AM License for ULTRIX RISC	QL-MGUA8-AA
DECmcc Extended LAN Manager FM License for ULTRIX RISC	QL-MGVA8-AA
DECmcc Extended LAN Manager TK50 Hkit for ULTRIX RISC	QA-MGUAA-H5
Trade-in Order Numbers for Current DECelms Customers	
DECelms to DECmcc Extended LAN Manager AM License for VMS	QL-MHTA9-AA
DECelms to DECmcc Extended LAN Manager AM License for ULTRIX RISC	QL-MHUA8-AA
DECelms to DECmcc EMS License for VMS	QL-MHVA9-AA
DECmcc EMS Hkit for VMS TK50	QA-YFVAA-H5
Note: To qualify for the reduced license fee, proof of DECelms license is required. A trade-in will terminate the DECelms license.	

LAN Traffic Monitor V1.2

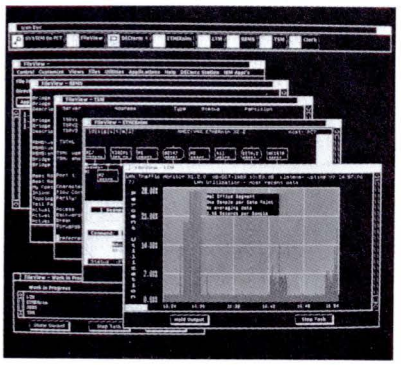

The LAN Traffic Monitor (LTM) is a tool used in multivendor environments to analyze the utilization of an extended LAN. A LAN Bridge 100 or LAN Bridge 150, downline-loaded with the unique monitoring software, is attached to the 802.3/Ethernet cable and transmits information to the LAN Traffic Monitor Host software program located on any VAX system in the extended LAN. The LAN Traffic Monitor permits multiple users from anywhere on the extended local area network to access the traffic data.

The LTM software collects statistics on all local area network traffic regardless of the higher-level protocol. For example, users of DECnet, TCP/IP, LAT, and XNS can study performance on the network by the higher-level protocol. The LTM software gives the network manager the flexibility to monitor different segments of an extended local area network and have this information collected at a central location. The LTM software provides network utilization graphs that show the network manager the performance of the various local area network segments.

Features

- Provides timely, accurate information needed to maximize network performance and plan network growth.
- Guarantees the integrity of the traffic statistics by capturing every frame and continuously updating the application software.
- Displays data from multiple monitors on any host running the LTM software in the extended LAN.
- Gathers traffic statistics from any device connected to the local area network and provides data based on nodes, addresses, and/or protocol types.
- Provides performance measurements allowing for the optimum configuration and operation of the local area network.
- Simplifies analysis of local area network traffic data through the use of both graphic and tabular displays.
- The easy-to-use menu structure shortens the learning curve of the first-time user.

Prerequisite Hardware

- LAN Bridge 150 or LAN Bridge 100 (DEBET) with minimum revision level E.
- Any valid VAX or MicroVAX system, (as specified in Software Product Description 27.80.00), with a Digital 802.3/Ethernet controller.

Prerequisite Software

- VMS operating system
- DECnet VAX on the host processor

▲ Refer to the Software Product Description 27.80.00 for required versions of prerequisite software.

Ordering Information

Use the software order code template in Section 5 when building an order code number from the software Unique Product Identifier (UPI). Refer to the Software Product Description (SPD), or consult your local sales representative to determine whether the software application ordered is supported by the processor for which it is intended.

▲ Refer to the following sources for further information on supported processors and services:

- Software Product Description 27.80.00
- Unique Product Identifier VEH

LAN Traffic Monitor-Reports (LTM-Reports) V2.0

LAN Traffic Monitor-Reports (LTM-Reports) is a Packaged Application Software Solution (PASS) featuring software, documentation, integration and orientation services. LTM-Reports is a powerful network monitoring tool. The tool enables you to collect, analyze and present configuration and historical performance data from an Ethernet-based Local Area Network (LAN).

The LTM-Reports V2.0 package consists of three components: the Traffic Data Collector, the Configuration Data Collector, and the Reporter.

The Traffic Data Collector gathers statistics from LTM Listeners (LAN Bridge 100s or LAN Bridge 150s running LTM software) and stores those statistics in a history file.

The Configuration Data Collector collects LAN configuration data and stores the data in text files, which LTM-Reports uses to create a display of your current LAN configuration.

The Reporter performs statistical analysis on the data you select from the history file and outputs the data to either a terminal, file, or graphic device. Graphic reports styles include bar chart, line graph, histogram, and pie chart.

Features

- Unattended data collection — Operating in background mode, LTM-Reports can collect statistics over extended periods of time, without user intervention.
- Customized reporting — LTM-Reports allows you to specify the report format, the statistics desired, and the time range for each report generated.
- Tabular and graphic style outputs — Supports output on DEC GKS supported devices in line graph, histogram, bar chart, and pie chart styles.
- Multiprotocol monitoring — LTM-Reports collects and displays statistics on all traffic in multivendor Ethernet networks (for example, DECnet, XNS, TCP/IP, LAT).
- Portability to other applications — LTM-Reports includes tools and documentation for use with VAX DATATRIEVE or with any VMS high-level language.
- On- or off-site analysis of all LAN traffic — LTM-Reports allows data to be collected on one system and taken to another location for later analysis.
- Source-to-destination data collection and reporting — Provides full source-destination-protocol type monitoring.

Prerequisite Hardware

- LAN Bridge 100 or LAN Bridge 150 with minimum revision Level E. Any valid VAX or MicroVAX system (as specified in Software Product Description 27.80.00), with a Digital 802.3/Ethernet controller.
- Optional DEC GKS supported terminal or printer (for graphic reports).

Prerequisite Software

A VMS operating system V5.4 or higher is required to run the following products:

- DEC GKS V4.1 is required on the system running the Reporter.
- DECelms V1.0 or DECmcc V1.1 is required on the system running the Configuration Data Collector.
- LAN Traffic Monitor (LTM) V1.1 or higher is required to operate the LAN Bridge 100 or 150 as an LTM Listener.
- DECnet VAX V5.2 is required for downline loading of the LTM Listener software.

Note: LTM and LTM-Reports cannot operate on the same system simultaneously. If simultaneous operation is required, LTM and LTM-Reports must be installed on separate systems.

Ordering Information

LTM-Reports is a Packaged Application Software Solution (PASS) from Digital Services. It includes both software and service components.

LAN Traffic Monitor-Reports Order Codes

Option	Order Code
New User License	Q2-GAFA9-AA
Update License	Q2-GAFA9-RA
PASS Delivery, Installation and Orientation	Q2-GAFA9-AZ
Media and Documentation	Q2-GAFAA-H*

* 5=TK50, M=Magtape, 9=no media dependency

▲ Refer to the following sources for further information on supported processors and services:

- Packaged Applications Software Solution Description (PASSD) is available on line from the U.S. Digital Solutions Library and/or from your local authorized Digital representative.
- Unique Product Identifier GAF.

NMCC VAX ETHERnim (Ethernet Network Integrity Monitor) V2.3

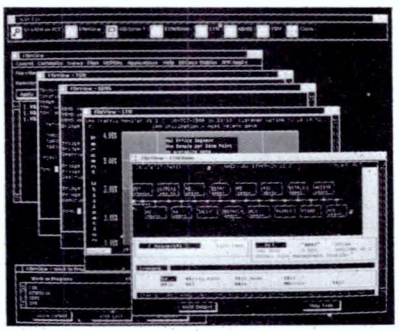

NMCC VAX ETHERnim is a network management tool that aids in fault isolation and configuration management of extended local area networks. NMCC VAX ETHERnim runs as a layered product on the VMS operating system. Once installed it "listens" to a network and builds a database and a graphic topology map of an extended LAN. NMCC VAX ETHERnim recognizes both Digital and multivendor devices on a network and includes them in the database and on the map. Full functionality of NMCC VAX ETHERnim is achieved by having DECnet software and remote test command files in target nodes.

NMCC VAX ETHERnim is designed to test the communications path through an Ethernet protocol and DECnet. It also has the ability to gather system information for its database from remote VMS and RSX nodes by invoking test probes (remote command files).

NMCC VAX ETHERnim is a multivendor product that recognizes local area network addresses other than DECnet, and gives the network manager the capability of maintaining a large amount of information about each node via a database that can be edited. It can be operated from local terminals (VT125, VT240, VT241, VT330, VT340) using ReGIS graphics for graphic representations of the network under test. (▲ Refer to Software Product Description 26.96.00 for more information.)

Features

- Creates and displays a network topology map. Commands are provided to allow the network manager to customize the map display.
- Is directly connected to the local area network, and builds a permanent database containing basic information about each node that it detects.
- Provides a means of path testing to ISO levels I and II to all nodes on the Ethernet (with the exception of the MicroVAX I and VAXstation I), and to DNA network application and user layers for any node running DECnet Phase IV on the Ethernet.
- Provides a means of determining the VAX processor type for VMS DECnet nodes on the Ethernet.

Prerequisite Hardware

- Any valid VAX configuration or MicroVAX system, as specified in Software Product Description 26.96.00
- VT125, VT240, VT241, VT330 or VT340 graphics terminal

Prerequisite Software

- VMS operating system
- DECnet VAX

▲ Refer to the Software Product Description 26.96.00 for required versions of prerequisite software.

Ordering Information

Use the software order code template in Section 5 when building an order code number from the software's Unique Product Identifier (UPI). Refer to the Software Product Description (SPD), or consult your local sales representative to determine whether the software application ordered is supported by the processor for which it is intended.

▲ Refer to the following sources for further information on recommended configurations, supported processors, and services:

- Software Product Description 26.96.00
- Unique Product Identifier 514

NMCC DECnet Monitor V2.3

The NMCC/DECnet Monitor is a software tool for the observation and control of complex, corporate backbone networks. NMCC/DECnet Monitor responds to English-like commands and graphically presents network conditions within a color network map (if the user has an optional color monitor). This tool also works with a database of configuration information and network parameters that can be readily accessed and analyzed.

The NMCC DECnet Monitor is designed to assist in three key areas of network management: configuration, fault, and performance management.

Features

- Nodes can be instructed to send selected DECnet events to the NMCC DECnet Monitor. This avoids major problems and minimizes downtime because it enables a manager to detect problems early.
- Relational database capability provides for either active or passive collection of statistics.
- Visual displays of network configuration and performance information simplify interpretation of data and highlight conditions requiring attention. Network topology is displayed as a logical map for easy recognition of network elements and potential trouble spots.
- Histograms and bar charts display historical information to help users analyze trends and plan for growth and change.
- Real-time event logging with predetermined polling parameters enables users to detect problems early and more efficiently.
- Update and adjustment of line charges provide for an automatic assessment of the cost/performance of the network.
- Improved online help facility gives immediate information pertinent to a particular screen.
- Separate kernel and user interface gives users the flexibility to mix and match centralized or distributed control.

Prerequisite Hardware

- Any valid VAX or MicroVAX system as specified in the Software Product Description 26.91
- VT240, VT241, VT330, VT340 terminal (for graphic displays), or VT100 or VT220 (for tabular representation)
- DECnet communication device

- Storage device of 35 MB

Prerequisite Software

- VMS operating system
- DECnet VAX
- Full or run-time DEC GKS for VMS
- Full or run-time VAX Rdb/VMS

▲ Refer to the Software Product Description 26.91.00 for required versions of prerequisite software.

Ordering Information

Use the software order code template in Section 5 when building an order code number from the software's Unique Product Identifier (UPI). Refer to the Software Product Description (SPD), or consult your local sales representative to determine whether the software application ordered is supported by the processor for which it is intended.

Refer to the following sources for further information on recommended configurations, supported processors, and services:

- Software Product Description 26.91.00
- Unique Product Identifier VTG

DECmcc WANdesigner

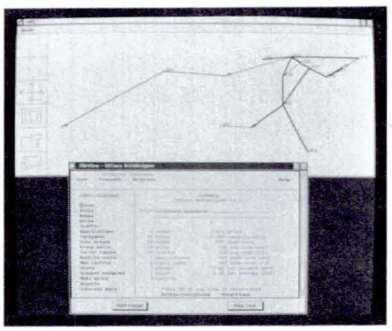

DECmcc WANdesigner is an interactive VMS layered software product that enables users to design new WANs or evaluate changes to existing ones based on cost considerations, equipment, application data, and performance requirements. Changes to existing networks can be planned in advance and alternative designs can be generated for comparison purposes. It provides an analytical process through which users can propose "what if" questions and evaluate different possible combinations of network links, equipment, traffic, and performance.

DECmcc WANdesigner is the initial product offering of a planned series of integrated network planning, design, and optimization products that will take place within the context of the DECmcc EMA program. The first release will be a standalone software product, with the capability of operating under terminal emulation in the DECwindows environment. In subsequent versions, DECmcc WANdesigner will be more closely coupled with the EMA-compliant family of products as an administrative application.

Features

Using a device that supports VAX GKS software, users can display and interact with network topology maps. Such maps, with DECmcc WANdesigner's DECforms-based menu interface, enable users to describe and map existing networks, estimate network performance, design new networks, and generate reports.

- Designs networks — Based on user-entered data on sites, nodes, traffic, cost tables, area assignments, and performance goals, DECmcc WANdesigner will provide a wiring plan or plans.
- Describes networks — Users can describe networks by entering site locations, equipment types for nodes at each site, speeds and DECnet routing costs of wires and circuits, and end-to-end traffic in bits per second (b/s).

- Generates reports — DECmcc WANdesigner will provide site, node, and wire inventory reports, traffic utilization reports, statistics on response times and path lengths, and estimated tariff price reports. DECmcc WANdesigner will also generate network maps.
- Estimates performance — Provided with protocol overhead data, DECmcc WANdesigner will check the legality of the overall DECnet design, compute utilization of each wire and node, compute end-to-end traffic times, and compute approximate tariff costs.
- Facilitates optimization — Through proper design, an appropriate balance between WAN performance and costs can be reached based on individual customer requirements.
- Justifies costs — With DECmcc WANdesigner, additional lines, systems, etc., can be cost-justified based on results of planning.
- Maintains constant improvement — An ongoing "evaluation" tool, not strictly a "design" tool.
- Provides extensive support for DECnet and IP routing.

Overall, DECmcc WANdesigner facilitates design and evaluation of networks by conducting "what if" analyses on existing or planned networks. Users can change network component definitions, application profiles, and line speeds; increase traffic rates or alter response time requirements; and have DECmcc WANdesigner compute and display the results of the proposed changes.

Prerequisite Hardware

- VT2xx Terminal or Terminal Emulator to display network map
- VT1xx Terminal or Terminal Emulator

▲ Refer to System Support Addendum 32.45.00-A for availability and required versions of prerequisite/optional hardware and software.

Prerequisite Software

- VMS operating system
- DECforms runtime software
- VAX GKS runtime software

Optional Software

- NMCC DECnet Monitor
- DECmcc Enterprise Management Station

Ordering Information

Use the software order code template in Section 5 when building an order code number from the software's Unique Product Identifier (UPI). Refer to the Software Product Description (SPD), or consult your local sales representative to determine whether the software application ordered is supported by the processor for which it is intended.

▲ Refer to the following sources for further information on recommended configurations, supported processors, and services:

- Software Product Description 32.45.00
- Unique Product Identifier YMG

NET/MASTER

For customers interested in IBM SNA system and network management, Digital's External Referral Agreement enables Digital to offer a solution that includes System Center Inc.'s NET/MASTER product and support services. The NET/MASTER product, in conjunction with Digital's DECnet SNA transport products, provides additional capabilities to the DECmcc family of products.

NET/MASTER is an integrated network management system for SNA environments. It provides tools for automating the physical and logical management of SNA networks. NET/MASTER is a modular system which can be configured to include

- SYS/MASTER — automates system management via message filtering, distribution, and response. Operators create automation rules through a menu-driven facility.
- INFO/MASTER — enables the creation of problem, change, configuration and inventory management applications with centralized data on the SNA systems and networks.

Systems Center, Inc. is a leading international developer and marketer of software products that are used to manage and control the operation of heterogeneous information systems, data centers, and networks.

Configuration Guidelines

- Any IBM System/370 (Model 145 or larger), 30XX, 4300 Services, 9370, or compatible computer with ACF/VTAM V2.2 or higher and one of the following operating systems:
  - DOS/VSE
  - DOS/VSE/SP
  - MVS/SP
  - MVS/XA
  - MVS/ESA
  - VM/SP
  - VM/HPO
  - VM/XA
- A minimum of 2 MB of virtual memory, depending on network size and transaction loads.
- Any IBM 3270 (or equivalent) terminal and all asynchronous (LU Type 1) devices.

Ordering Information

Consult your local Digital sales representative.

TokenVIEW Plus

TokenVIEW Plus software for 4 Mb/s and 16 Mb/s 802.5/Token Ring networks turns a DOS based PC into a ring network management system. It provides physical layer configuration and fault management for 802.5/Token Ring LANs as well as in-band (802.5 MAC layer frame information) and out-band (wire center relay status) network management.

Features

- Configuration database accounts for all 802.5/Token Ring LAN hardware and network connection.
- Provides trouble shooting, fault isolation, and correction, as well as general ring management.
- Menu driven, multitasking software with window displays.
- Requires one ProNET-4/16 NIC (DW1xx-AA or DW2xx-AA) within the DOS system.
- In-band monitoring collects error reports, soft errors, and physical layer fault detection via the Ring Error Monitor and compiles statistical and status information for all network connections.
- Out-band management enables network managers to troubleshoot and isolate failures throughout the Series 70 IWCs out-band channels communications.
- Offers password protection for ring security.
- One TokenVIEW Plus system required per Token Ring.
- Includes documentation and training video tape.

Prerequisite Hardware

- Dedicated personal computer: either an IBM PC/XT/AT, Micro Channel or compatible personal computer with an available serial COM port.
- MDA, CGA, EGA, VGA, or Hercules display interface.

Prerequisite Software

- MS-DOS or PC/DOS Version 2.1 or higher.

Ordering Information

Order Codes	
Option	**Order Code**
TokenVIEW Plus	QB-MBDAA-AA

SNMP/Token Ring Proxy Agent

The Proteon SNMP/Token Ring (TR) Proxy Agent is an MS-DOS based application that monitors and manages 802.5 Physical Layer and MAC Layer entities while responding to requests for management systems such as DECmcc. Remote requests and responses are formulated as Simple Network Management Protocol (SNMP) messages over the User Datagram Protocol (UDP) transport protocol. Proper SNMP MIB support by the SNMP management system of the SNMP/TR Proxy Agent is required. The network administrator should consult the individual SNMP management system's documentation (DECmcc for example) for instructions on configuring the SNMP/TR Proxy Agent MIBs into the management system.

The Proxy Agent can manage a maximum of three Token Ring segments. The PC must be configured with a Proteon-4/16 Token Ring Network Interface Card (NIC) for each managed 802.5/Token Ring segment, and an additional Token Ring PC NIC to communicate with the management system. The SNMP proxy agent has no local user interface other than the installation procedure. User access is via SNMP management systems such as DECmcc.

Features

- Troubleshooting and fault-management capabilities including failure detection, isolation and recovery, ring beaconing, and ring partitioning help reduce local ring-down time.
- In-band monitoring and out-of-band control (when used with Proteon Intelligent Wire Centers). This feature allows administrators to control individual connections to isolate and resolve network failures.
- Network (Token Ring LANs) security by preventing unauthorized nodes from accessing the network,
- Automatic updates to configuration changes.
- Can be installed on an existing Token Ring network.

Note: SNMP/Token Ring Proxy Agent is only an agent with no user interface; it is designed to work with other managers such as DECmcc.

Prerequisite Hardware

- Intel 80286-, 80386-, or 80486-based PC or compatible
- Serial communications port (only if out-of-band management is needed)
- Hard disk: 10 MB minimum
- Memory: consumes 404 KB of RAM in ProNET-4/16 configuration with one ring monitored
- Two Network Interface Cards
  - Proteon ProNET-4/16 NIC to send/receive 802.5 MAC frames
  - ProNET-4/16 NIC supported by TCP/IP kernel included in the proxy agent to provide a path to/from the SNMP remote management system

Prerequisite Software

- MS-DOS V3.3 or later
- FTP PC/TCP, Network software for DOS, FTP Software, Inc. (provided with the SNMP/TR proxy agent)
- DECmcc SNMP Access Module V1.2

Ordering Information

Order Codes	
Option	**Order Code**
SNMP/Token Ring Proxy Agent	QB–MBCAA–AA

Remote System Manager

Remote System Manager (RSM) is a network application that centralizes and facilitates the recurring system management tasks of:

- Distributing and installing software.
- Backing up and restoring files across the network.
- Tracking software configurations among participating systems.

▲ Refer to Section 6, "DECnet System Services," for more information.

To help protect the security of network messages, Digital offers the DESNC Ethernet Enhanced Security System that selectively encrypts information across a network, without affecting other network nodes not requiring encryption.

Ethernet Enhanced Security System (DESNC)

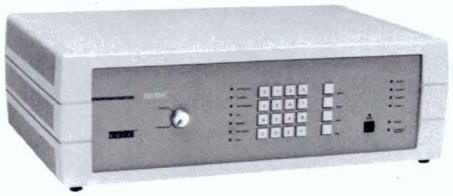

The Ethernet Enhanced Security System is designed for users whose needs exceed current commercial security practice. This system allows implementation of security-enhanced 802.3/Ethernet local area networks (LANs) that permit multiple network nodes to share the same cable plant, assuring that only authorized nodes have access to sensitive data. The Ethernet Enhanced Security System:

- Increases the protection of information on 802.3/Ethernet networks through cryptographic protection of data confidentiality and data integrity.
- Supports comprehensive network security management with node access control, key management, and monitoring and control.
- Is compatible with IEEE 802.3 and Ethernet standards.
- Supports single-segment, multiple-segment, and extended LANs defined by the *OPEN DECconnect System Guide*.

The Ethernet Enhanced Security System comprises two products integrated into standard 802.3/Ethernet environments — Digital's Ethernet Secure Network Controller (DESNC) and VAX Key Distribution Center (KDC) layered product.

Features

- Network security management centralized at VAX KDC system provides focused management and control.
- Multiple, cooperating VAX KDC systems assure improved network availability and performance.
- Automatic key generation and distribution operate transparently.
- Comprehensive and flexible audit facilities support effective security audit and alarms, as well as network monitoring and fault isolation.
- Performance is suitable for high-performance 802.3/Ethernet applications.
- DES-encrypted 802.3/Ethernet frames improve information confidentiality.
- DES-encrypted Manipulation Detection Codes (MDCs) improve information integrity.
- Node authentication increases security.
- Network security-policy enforcement supports logical groupings of nodes (for example, along security or organizational boundaries).
- Default network security policy quickly and easily enhances security for a network, with minimal impact on existing operations while supporting later development of more sophisticated policies.
- 802.3/Ethernet-compliance provides the flexibility to support:
  - Single-segment, multisegment, and extended LANs.
  - Multiple, simultaneous higher-layer protocols, such as DECnet, LAT, TCP/IP, and NFS.
  - Different network technologies and topologies, for example, any OPEN DECconnect network.

Qualifications

This product is currently available only in the United States and Canada. It represents the current state-of-the-art in commercial 802.3/Ethernet security systems; however, no single system provides complete security. Users should follow industry-recognized security practices and should not rely solely on a single security-enhancing product to provide protection from computer misuse, loss of data, or loss of service.

U.S. government regulations specify that cryptographic hardware and software can be exported by license only. Specifically, the Department of State's International Traffic in Arms Regulations (22 Code of Federal Regulations Subchapter M) require that an export license be obtained from the Department before any cryptographic hardware or software is exported from the United States. Accordingly, an explicit condition of sale of this product is that the purchaser agrees not to export or cause to be exported this product or any portion of this product from the United States without obtaining the requisite export license from the Department of State.

DESNC

The DESNC is a standalone, store-and-forward cryptographic controller that provides realtime encryption and decryption of 802.3/Ethernet frames for LAN environments. Also, the DESNC provides security and network management services such as client node authentication, enforcement of network access control policies, and status reporting.

The DESNC is installed on the transceiver cable between client nodes and the LAN. The DESNC connects directly to the network via a standard 802.3/Ethernet interface (AUI D-shell connector). The DESNC appears as a node to the network.

Client nodes are attached to the DESNC controller via four modified ThinWire ports (client ports). Each client port can support a single client node or multiple nodes on "client-port subnetworks." The DESNC can support up to 20 client nodes in any distribution across the four client ports. Client nodes using transceiver-cable interfaces are attached to the DESNC via the DESTA ThinWire Ethernet transceiver.

The DESNC uses cryptography to protect against unauthorized disclosure of information (confidentiality) and unauthorized modification of messages (integrity). The DESNC encrypts 802.3/Ethernet frames received from client nodes for transmission on the network, and decrypts 802.3/Ethernet frames received from the network for transmission to client nodes (refer to the following figure). The DESNC encryption process takes data (plaintext) and a cryptographic key (random 56-bit variable) as inputs and transforms the input data into an unintelligible form (ciphertext). The decryption process converts ciphertext back to plaintext.

The DESNC uses a hardware implementation of the Data Encryption Standard (DES) cryptographic algorithm defined by the National Bureau of Standards in FIPS PUB 46. The cryptographic process is transparent to the client nodes, and cryptographic keys are provided by the VAX KDC layered product.

Typical DESNC Configuration

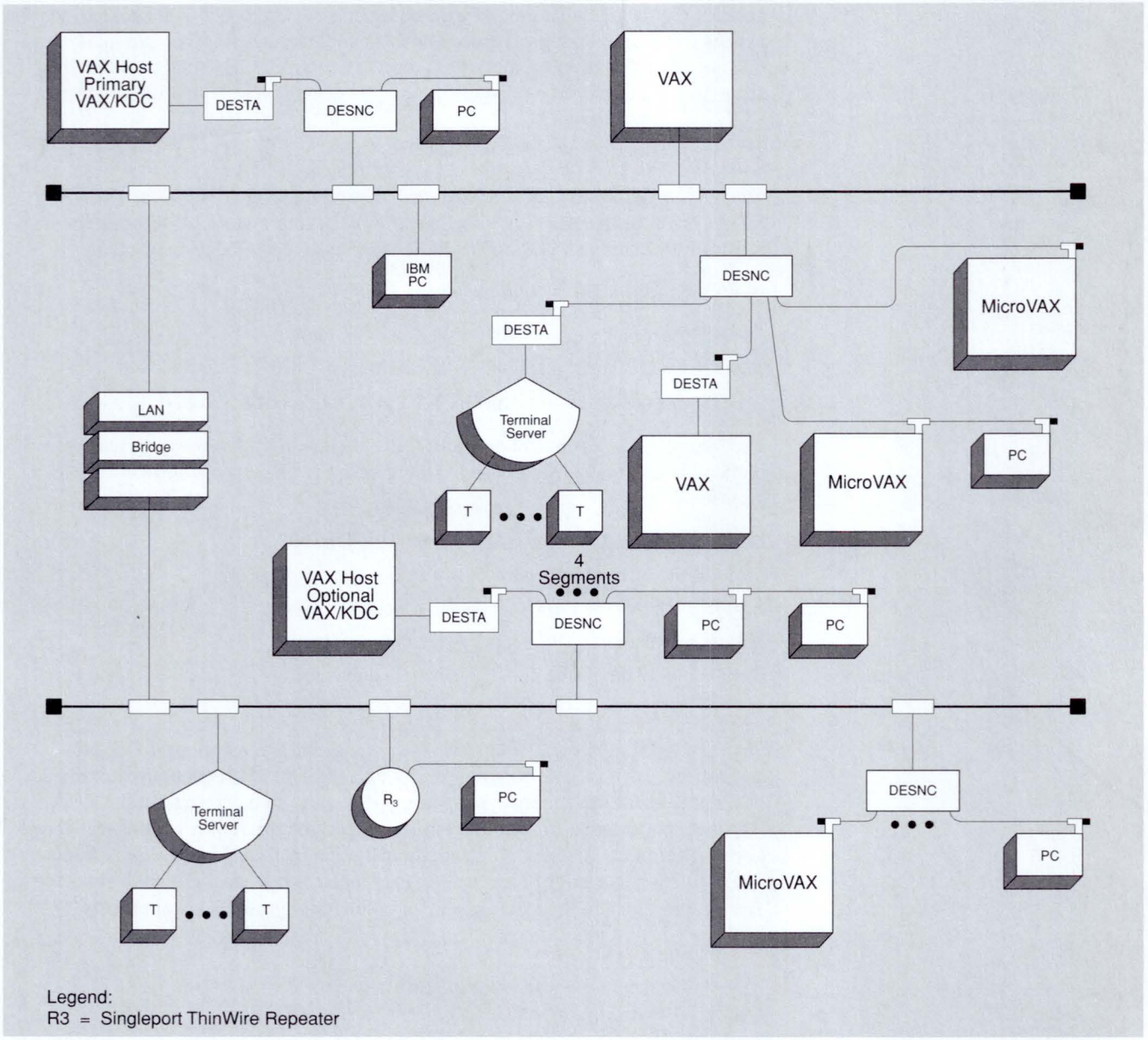

TBG-092-00

The DESNC and VAX KDC system implement a default access control policy that allows all nodes on a network to communicate with each other, after successful authentication. Such a policy allows for rapid integration of DESNC controllers and VAX KDC systems with minimal impact on existing network operations. Under this open policy, client nodes (that is, nodes connected to DESNC controllers) communicate with each other using encrypted frames on the network. All other communication, such as client node-to-node, is unencrypted.

Customers can optionally use DESNC controllers in conjunction with an associated VAX KDC system to implement more sophisticated access control policies. Fundamentally, the network nodes can be partitioned into separate access classes (for example, logical groups such as engineering, finance, and marketing) that are protected from each other. The access control policy may be defined to allow two nodes to communicate unencrypted even if one of them is connected to a DESNC controller.

VAX KDC System

The VAX KDC system, attached to the LAN, manages the DESNCs. The VAX KDC system distributes operational firmware, keying material, and other security control information (for example, audit criteria) to the DESNC controllers.

A VAX KDC system is comprised of

- A VAX processor running VMS (VAX KDC node)
- The VAX KDC layered software, which runs on VMS
- A DESNC configured to support a VAX KDC node (KDC-DESNC)

The VAX KDC system also provides tools to allow a system security manager to implement and manage a security-enhanced LAN. These tools allow a system security manager to

- Define and maintain the configuration of the DESNC(s)
- Monitor the operational and security status
- Actively control the DESNCs on the LAN
- Maintain an audit trail of security-relevant events
- Define and maintain the network access control policy

Configuration Requirements

Standard LAN topologies have few restrictions, and the addition of DESNC controllers and VAX KDC systems to an existing LAN will generally not disrupt operations or the basic network topology. However, some configuration requirements must be followed to ensure proper operation of a security-enhanced LAN. Also, in certain situations, additional guidelines can improve the efficiency and security of a security-enhanced LAN. Contact your local Digital Network Team representative for assistance in assessing configuration requirements.

Prerequisite Hardware

- Any VAX processor (as specified in Software Product Description 27.77.00) to support a VAX KDC system
- A valid 802.3/Ethernet local area network, either standard or ThinWire

Prerequisite Software

- VMS operating system V5.0 or later to support a VAX KDC system
- DECnet VAX to support a VAX KDC system

Ordering Information

Minimum configuration includes two DESNCs and one VAX KDC system on an 802.3/Ethernet LAN. This minimum configuration typically supports from 1 to 7 client nodes and can support a maximum of 39 client nodes.

To order software that supports earlier versions of VMS and DECnet VAX, consult your Digital sales representative. ▲ Refer to the following sources for further information on supported processor and services:

- Software Product Description 27.77.00
- Unique Product Identifier 03U

Ethernet Enhanced Security System (DESNC) Hardware Order Code	
Option	**Order Code**
Digital Ethernet Secure Network Controller (DESNC) LAN Encryption Device, 120 Vac	DESNC-BA

DECinspect Family of Security Management Tools

DECinspect is a family of products that provide security for systems and networks. Products are software-based and include Compliance Manager, Intrusion Detector, and Security Reporting Facility.

DECinspect is the most comprehensive security solution on the market today. The Compliance Manager tool is like a security guard making his rounds, checking the doors and windows. The Intrusion Detector tool is similar to alarms — they go off when an intrusion occurs. The Security Reporting Facility tool is like a security desk that collects and summarizes all the security-related information.

DECinspect Compliance Manager for VMS V2.2

DECinspect Compliance Manager for VMS V2.2 is a software tool that periodically evaluates compliance of the operating system and network security settings with specified security policy. Its tests can be tailored by setting test parameters that reflect the security standards of customers. Tests and parameters are selected and modified through a menu interface.

Features

DECinspect Compliance Manager for VMS V2.2

- Runs on every VMS system in a customer's network to periodically examine security relevant VMS subsystems for compliance to the customer's specific predefined security policy.
- Has tests that can be tailored to suit a wide variety of customers' needs by setting parameters that are consistent with their security policies.
- Produces detailed evaluation reports for local security managers as well as summary reports suitable for organizational use.
- Produces "lockdown" command procedures when the system is non-compliant with the security policy. Security managers can use these scripts to bring the system back into compliance.
- Optionally works with DECinspect Security Reporting Facility software. The Security Reporting Facility software runs on one or more VMS systems to support consolidated collection and management of compliance reports from DECinspect CM installations.

- Includes user-customized tests.
- Includes fuller password checking, expanded new account and custom file tests, and more processing options for VAXcluster environments.
- Includes faster performance and increased granularity of tests, improved user interface, and more consistency with the Security Reporting Facility.

Prerequisite Hardware/Software

VAX, MicroVAX, VAXstation, or VAXserver configurations as specified in the System Support Addendum (SSA 41.09.00–A).

Ordering Information

DECinspect Compliance Manager for VMS Order Codes	
Option	**Order Code**
Software Licenses	QL–GKLA*-AA
Software Media	QA-GKLA*-H#
Software Documentation	QA-GKLA*-GZ
* Processor code	
# Media type	

▲ Refer to the following sources for further information on supported processor and services:

- Software Product Description 41.09.00
- Unique Product Identifier GKL

DECinspect Compliance Manager for ULTRIX V2.2 and for SunOS V2.2

DECinspect Compliance Manager for ULTRIX and SunOS periodically evaluates compliance of the operating system and network security settings with the specified security policy. Its tests can be tailored by setting test parameters that reflect their security standards. Tests for customers and parameters are selected and modified through a user-friendly menu interface.

Features

- Runs on every ULTRIX and SunOS system in a customer's network and periodically examines the security relevant subsystems for compliance to the customer's predefined security policy.
- Has tests that are tailored to suit a wide variety of customers' needs by setting parameters that are consistent with their security policies.
- Produces detailed evaluation reports for local security managers as well as summary reports suitable for organizational use.
- Produces "lockdown" shell scripts when the system is non-compliant with the security policy. Security managers can use these scripts to bring the system back into compliance.
- Optionally works with DECinspect Security Reporting Facility software. The Security Reporting Facility runs on one or more VMS systems to support consolidated collection and management of compliance reports from DECinspect Compliance Manager installations.

Prerequisite Hardware/Software

ULTRIX and SunOS configurations as specified in the System Support Addenda (SSA 41.26.00-A for ULTRIX version, SSA 41.25.00-A for SunOS version).

Ordering Information

DECinspect Compliance Manager for ULTRIX and SunOS Order Codes	
Option	**Order Code**
For ULTRIX on VMS	
Software Licenses	QL–MLAA*-AA
Software Media	QA-MLAA*-H#
Software Documentation	QA-MLAA*-GZ
For ULTRIX on RISC	
Software Licenses	QL–MLBA*-AA
Software Media	QA-MLBA*-H#
Software Documentation	QA-MLBA*-GZ
For SunOS	
Software Licenses	QL–MLCA*-AA
Software Media	QA-MLCA*-H#
Software Documentation	QA-MLCA*-GZ
* Processor code	
# Media type	

▲ Refer to the following sources for further information on supported processor and services:

- Software Product Description 41.26.00 (for ULTRIX) and 41.25.00 (for SunOS)
- Unique Product Identifier MLA, MLB, MLC

DECinspect Intrusion Detector for VMS V1.0

DECinspect Intrusion Detector for VMS is a software tool that provides real-time intrusion detection through high-priority alerts sent to system or security management personnel at the time a suspicious activity is occurring.

Features

- Customer can define what are suspicious and hostile activities.
- Uses a case method to track intrusions and associates similar events together for a comprehensive picture of the intrusion.
- Invokes countermeasures including terminating the hostile process, disabling malicious user accounts, reenabling alarms if they were disabled.
- Notifies designated personnel and sends alarm tokens to DECinspect Security Reporting Facility.

Prerequisite Hardware

VAX, MicroVAX, VAXstation, or VAXserver configurations as specified in the System Support Addendum (SSA 41.27.00–A).

Prerequisite Software

DECinspect Compliance Manager for VMS V2.2

Ordering Information

DECinspect Intrusion Detector for VMS Order Codes	
Option	**Order Code**
Software Licenses	QL–MRNA*-AA
Software Media	QA-MRNA*-H#
Software Documentation	QA-MRNA*-GZ
* Processor code	
# Media type	

▲ Refer to the following sources for further information on supported processor and services:

- Software Product Description 41.27.00
- Unique Product Identifier MRN

DECinspect Security Reporting Facility for VMS V2.0

DEC Security Reporting Facility for VMS V2.0 is a software tool that a security or system manager uses, in conjunction with DECinspect software (SPD 26.N1.xx), to establish a custom security analysis and reporting system to manage the security of a network of distributed systems. With these tools, the security manager can implement and maintain a security standard that is consistent with corporate security policy for the VMS nodes in the distributed computing environment.

The Security Reporting Facility software is designed to run on one or more nodes to support centralized collection and management of compliance reports from DECinspect installations. DECinspect software is designed to run on every node in a network to periodically evaluate compliance with a security policy defined by the security manager.

Optionally, DECinspect software can be configured to send summary security status messages (called tokens) from DECinspect CM and DECinspect ID to a Security Reporting Facility installation. While DECinspect can be used alone in small distributed systems, managing a large number of nodes or a set of nodes on a dispersed network can be very difficult. The Security Reporting Facility centralized management capabilities can be very helpful in these situations.

If centralized management is desired, the customer will establish one or more Security Reporting Facility installations on the network. Typically, Security Reporting Facility installations will be set up to support the organizational reporting structure (e.g., one Security Reporting Facility node per organizational management domain). The specific Security Reporting Facility installation that a DECinspect node reports to is specified during installation of the DECinspect software. The Security Reporting Facility software performs integrity checks to prevent unauthorized modification of token information during transmission from DECinspect installations.

Once the system is configured, the Security Reporting Facility software collects the tokens and stores the compliance data in a relational database automatically. The Security Reporting Facility compliance data includes

- Node name
- Network address
- Hardware type
- Cluster name (if a cluster member)
- Inspect version
- Operating system version
- Token date and time
- Parameter file identifier and information for validation
- Required Inspector test result summary

The Security Reporting Facility compliance data are stored so that designated users can access historical as well as current data to monitor the security compliance of nodes on the network. In addition to displaying the security status of any network node within the management domain of a particular Security Reporting Facility installation, the security manager can use the Security Reporting Facility software to do the following:

- Display and print information from the Security Reporting Facility database.
- Send noncompliance memos, which report the tests that failed on each node, to system and security managers automatically via electronic mail.
- Generate late-token memos, that list any nodes that fail to send a token within a specified time interval.
- Produce executive summary reports that list the percentage of nodes in a network that conform to the security standard in force.
- Forward tokens to another Security Reporting Facility installation automatically. A reporting structure consistent with the customer's organizational structure (e.g., hierarchical or matrix) can be established by the use of multiple Security Reporting Facility nodes.
- Store and access data about the responsible manager for a node or a group of nodes.
- Store and access data about valid parameter files used by the nodes running DECinspect software. DECinspect parameter files contain the settings established by the security manager consistent with the organization's security policy. The Security Reporting Facility and DECinspect are designed to work together to perform integrity checks to protect against unauthorized modification of DECinspect parameter files.
- Schedule tasks, such as producing reports or forwarding tokens, to run automatically.
- Purge old tokens from the Security Reporting Facility database.

The security managers can also write their own programs to extract data from other sources for storage in the Security Reporting Facility database as well as produce other Security Reporting Facility reports using any of the following Digital software products:

- RDO and SQL utilities of Rdb/VMS software
- Rdb/VMS precompilers
- VAX DATATRIEVE
- VAX RALLY
- VAX TEAMDATA
- DECdecision

Ordering Information

DECinspect Security Reporting Facility for VMS Order Codes	
Option	**Order Code**
Software Licenses	QL–GKMA*-AA
Software Media	QA-GKMA*-H#
Software Documentation	QA-GKMA*-GZ
* Processor code # Media type	

▲ Refer to the following sources for further information on supported services:

- Software Product Description 41.10.00
- Unique Product Identifier GKM

Network Services

9

This section contains the following topics:

Network Integration Services 9-1

Overview

Network integration is an area of increasing importance to information professionals. They are looking for solutions to help them integrate their multivendor network computing environments today and support their evolution to the open network environments of tomorrow. The multivendor challenges they face are

- Connectivity solutions to issues requiring a broad knowledge base across multiple technologies, protocols and transports with experience in integrating dissimilar networks.
- Interoperability solutions to challenges requiring an in-depth knowledge of protocols and distributed applications.
- Manageability solutions requiring expertise and tools to ensure network availability, proper support, and maintenance of their network environment.

Digital's Network Integration Services provide a comprehensive portfolio of network integration services that are custom solutions across the network life cycle. They ensure our customers' success in meeting the challenges of connectivity, interoperability, and manageability with

- Network Consulting Service
- Network Implementation Service
- Network Management Service

Network Integration Services

Network Consulting Service assists customers in understanding how to apply networking technology to meet their business needs and address issues associated with planning, designing, and managing an open network solution.

Digital's OSI Planning Services help customers transition to an open network environment while maximizing the use of their existing multivendor network(s) and protecting their investment. The planning and design services incorporate TCP/IP, DECnet, and Token Ring, as well as other leading network technologies.

Network Planning

A requirements analysis should be the first step in any network project, whether you plan to implement a new network, enhance an existing one, or integrate multiple existing networks. A Digital network consultant interviews key staff members to gather information on your organization's business plans, growth projections, and communications requirements, as well as on your existing systems, applications, and users.

After a review of the data, the consultant prepares a comprehensive requirements analysis document that establishes formal network design criteria and constraints.

Network Design

Design analysis helps you translate your formal network requirements into a detailed network design that is optimal for your specific needs. A requirements analysis document (see previous service summary) serves as the foundation for that process.

An experienced network consultant can provide

- A complete network audit
- An impact analysis report to transition to ADVANTAGE-NETWORKS
- A multivendor OSI network design
- An FDDI cable plant design
- A network management design
- Digital Naming Services design and population

Network Implementation Service

Network Implementation Service includes the integration of custom applications and third-party products to create a total open network solution. A Network Integration Services specialist will

- Install, certify, and ensure the interoperability of multivendor open network hardware and software components
- Establish communication connections for customers to public and Value-Added Network Services (VANS)
- Implement and set up the DECmcc network management platform
- Integrate third-party networking solutions (for example: Chipcom, Vitalink, Cisco, and StrataCom)

Under Installation Management, a Digital project specialist assumes full responsibility for managing the installation of your voice-and-data network.

The project manager reviews all applicable documentation. This typically includes the Site Survey Report and a physical layout design created as part of our network implementation service, described above, or an equivalent process.

The project manager prepares a detailed implementation plan that defines the installation specifications, a project schedule, bill of materials, site procedures, and costs. The managaer schedules and manages all installation activities including the use of qualified subcontractors, as required.

Digital conducts acceptance testing to ensure the cable system performs to the design and installation specifications. Digital also provides you with complete installation documentation, including "as-built" drawings.

To help ensure an efficient startup for your new network, Digital offers Startup Assistance Services for networks. These services provide an orientation for your staff in key topics such as network hardware and software, installation and upgrades, network management, programming, troubleshooting, and security.

For certification, Digital conducts a complete examination of your broadband cable facility to ensure the network meets or exceeds design specifications and qualifies for cable plant remedial maintenance.

Network Management Service

Network Management Service provides comprehensive, flexible, and tailored solutions that help customers manage their open system networks (TCP/IP and UNIX operating systems), maximize resources, minimize interruptions, and provide for efficient network operations.

Digital has made significant investments to develop the expertise of network technical personnel to complement the advanced automated tools that perform network management activities for open networks. The result is a set of services that minimize the customer's resource commitments while maximizing network availability.

Digital offers our Network Management Service for customer's TCP/IP and DECnet networks that span the customer's needs from self-management through full vendor support. The full vendor support option (NETsupport Operations Management) includes

- Comprehensive operations planning and configuration management provided by network professionals
- Fault isolation and resolution performed by the Central NETsupport Center (CNC) to analyze network problems and identify solutions; available 24 hours a day
- Proactive management using our network management system, DECmcc Management Station for ULTRIX (MSU), to analyze degradation of network performance before it results in a bottleneck or outage

The shared support option (NETsupport for TCP/IP) includes

- DECstation 5000 and DECmcc Management Station for ULTRIX (MSU) software including the Simple Network Management Protocol (SNMP) and Network Information Control and Exchange (NICE) protocols for isolating TCP/IP and DECnet network faults
- Three days of onsite consulting
- 32 hours per year of Network Advisory Support, provided by the TCP/IP specialists at the Central NETsupport Center

DECathena Services

System Integration Services, using the integration and application expertise of Network Integration Services and Application Project Services, has introduced DECathena Services to help our customers meet challenges in managing today's multivendor workstation environment.

DECathena Services provides a network-based solution that supports the management of large distributed workstation environments. DECathena provides location-independent computing for end users, ensures continuous system availability, and enables better access to system-wide resources such as printing and file services.

DECathena Services provides the ability for users to log in at any workstation in the DECathena system and have access to their accounts, files, and system-wide resources transparently, without any special commands or remote log-ins. In addition, system services (such as mail and printing), user applications, and files can be stored and managed in a centralized fashion. All of these services are protected by a leading-edge security system.

The core software capabilities include

- System Management
- Security
- Naming

Core application capabilities include

- Network-wide messaging
- Node name-independent mail system
- Online user-query response system
- Bulletin boards
- Location-independent printing

DECathena Services provides products and services so that Digital can work with the customer through every phase of the process, from planning consulting (to evaluate the viability of installing DECathena software) to design and startup implementation services for software installation, and even to ongoing management services. These management services include

- Fault, configuration, and security management
- Performance analysis
- Consulting

In addition, Digital provides Application Migration services to integrate a customer's software applications into the DECathena environment.

DECathena Services include

- Technical Qualification Service
- DECathena implementation
- DECathena Maintenance Service
- DECmcc MSU NETsupport Service
- System administration training
- DECathena binaries
- Documentation with client licenses

Open Network Customer Training

As part of the total Network Integration Services solution, Digital offers more than 45 network training courses designed to improve your skill set and increase your staff's productivity. These courses come in a variety of convenient formats.

Lecture/Labs

Lecture/labs provide network professionals with hands-on, practical skills in such areas as network management, security, programming, and troubleshooting. The Network Management I course and the PATHWORKS System Management: VMS Servers and DOS Clients course are the backbone of the network curriculum and are delivered at training centers around the world.

Network Seminars

Network seminars, designed for technology decision-makers, provide information on industry trends, international standards like OSI, and key technologies such as FDDI and ISDN. Seminars assist you in developing a long-term multivendor networking strategy that supports your organization's business goals. Introduction to DECnet OSI and Planning for the DECnet OSI Transition are just two courses designed to support the ADVANTAGE-NETWORKS program.

The portfolio of courses is listed in the following table.

Networking Courses

Title	Format	Part Number
Core Curriculum for Network Planners – Planning Phase		
Introduction to Data Communications	Text and video	EY-6716E-VH,VU
Introduction to Data Communications	Seminar	EY-1365E-S0
Digital Network Architecture (Phase IV)	Text-based	EY-1379E-PR
Digital Network Architecture (Phase V)	Seminar	EY-E851E-S0
Digital Network Architecture (Phase V)	Text-based	EY-F718E-PR
DNS Fundamentals	Text-based	EY-F719E-PR
Open System Interconnection	Seminar	EY-6762E-S0
Introduction to DECnet OSI Phase V	Seminar	EY-E875E-S0
Digital IBM Complementary Computing	Seminar	EY-8348E-S0
Cost of Network Ownership Analysis Guide	Text-based w/ media	EY-C195E-IX
FDDI Technology Overview	Seminar	EY-E874E-S0
EMA/DECmcc Technical Overview	Seminar	EY-E934E-S0
Core Curriculum for Application Programmers – Implementation Phase		
Introduction to Data Communications	Text and video	EY-6716E-VH,VU
Introduction to Data Communications	Seminar	EY-1365E-S0
Programming DECnet VAX	Lecture/lab	EY-A908E-L0
Programming DECnet VAX	Text-based	EY-8272E-PR
DECmcc: Access Module Development	Lecture/lab	EY-F893E-L0
An appropriate Utilizing VMS Features in ____ course	Lecture/lab	EY-9772–9780
Core Curriculum for Network Users – Implementation Phase		
Introduction to Data Communications	Text and video	EY-6716E-VH,VU
Introduction to Data Communications	Seminar	EY-1365E-S0
Using DECnet VAX	Text and audio	EY-8291E-PR
Core Curriculum for Network Managers – Operations Phase		
Introduction to Data Communications	Text and video	EY-6716E-VH,VU
Introduction to Data Communications	Seminar	EY-1365E-S0
System Management I	Lecture/lab	EY-9766E-L0
Network Management I: DECnet VAX Node Management	Lecture/lab	EY-A946E-L0

Core Curriculum for Network Managers – Operations Phase (Continued)		
DECnet VAX Network Management	Text-based	EY-8285E-L0
DECnet VAX Network Security	Lecture/lab	EY-8349E-L0
Network Fault Isolation	Seminar	EY-C242E-S0
DECnet VAX Network Troubleshooting	Lecture/lab	EY-F747E-L0
DECnet VAX Internals	Seminar	EY-8324E-S0
Network Management II: Administration and Management	Lecture/lab	EY-B001E-L0
PATHWORKS System Management: VMS Servers and DOS Clients	Lecture/lab	EY-F890E-L0
PATHWORKS System Management VMS Servers and DOS Clients	Seminar	EY-E847E-S0
PCLAN/Server Administration	Lecture/lab	EY-F884E-L0
PATHWORKS System Management: ULTRIX Servers and DOS Clients	Lecture/lab	EY-F750E-L0
PATHWORKS System Management: VMS Servers and Macintosh Computers	Lecture/lab	EY-F888E-L0
VAX P.S.I. Management	Lecture/lab	EY-E873E-L0
VAX P.S.I. Security	Lecture/lab	EY-H844E-L0
ULTRIX Network Management	Lecture/lab	EY-E867E-L0
Managing DEC EDI	Lecture/lab	EY-E862E-L0
An Overview of EDI	Video	EY-F581E-VH
MAILbus Management: Message Router	Lecture/lab	EY-D213E-L0
DECnet OSI Transition	Seminar	EY-E876E-S0
EMA/DECmcc Technical Overview	Seminar	EY-E934E-S0
DECmcc: Network Management Using DECmcc	Lecture/lab	EY-F879E-L0
DECdns Planning and Implementation	Lecture/lab	EY-F899E-L0
Core Curriculum for Network Maintenance Technicians – Operations Phase		
Telecommunications in the 90s	Lecture/lab	EY-E938E-L0
Data Communications Hardware Maintenance	Lecture/lab	EY-E939E-L0
Digital Baseband Ethernet Hardware Maintenance	Lecture/lab	EY-3892E-L0
Terminal Server Maintenance	Lecture/lab	EY-A983E-L0
Network Troubleshooting for Hardware Personnel	Lecture/lab	EY-3893E-L0
Network Troubleshooting I	Lecture/lab	EY-E936E-L0
Network Troubleshooting II	Lecture/lab	EY-E937E-L0

▲ For general information on Digital training or to obtain a catalog on Digital's network training products and services, please call the Customer Education and Training Group in the U.S. at (800) 332-5656.

Sales Case Study: Multivendor Network Integration

The customer: Swarthmore College, a small four-year coeducational institution located near Philadelphia, PA.

The problem: During the 1980s, various departments at Swarthmore had acquired dozens of computer systems from many different vendors. This diversity made it impossible for the college's 1,700 users to share computer resources in a consistent fashion.

The need: Swarthmore wanted to create a unified network that would provide complete connectivity and interoperability for more than 450 CPUs without rendering existing systems obsolete. Because the college had a small support staff, Swarthmore wanted one vendor to implement the entire project.

The Digital solution: Digital designed, integrated, and managed the installation of a multivendor network that includes an Ethernet backbone, a Sun LAN, an Apollo LAN, DECnet LANs, and numerous AppleTalk LANs.

At the hub is a VAX system that functions as a network file server and print server. A backbone of fiber optic cables fans out to campus buildings, connecting to individual LANs via coaxial cable.

The network supports three major protocols — DECnet, AppleTalk, and TCP/IP — and incorporates non-Digital network hardware products and public domain software that ensure interoperability.

The benefits: students, faculty, and staff can transparently share data, applications, and specialized peripherals. In addition, they can easily access off-campus resources. The network leaves room for expansion to a high-speed (100Mb/s) FDDI backbone.

Software Installation Services

Installation services are available for the VMS SNA, DECnet SNA Gateway, and DECnet products. This service provides assistance in installing the equipment and familiarizing the customer with the operation of these products.

Digital installs most Digital network and communications products at no additional cost when they are purchased with an operating system and System Startup Service Package for that operating system. There are some exceptions; the following networking products are not installed with a System Startup Package:

DEC X25router 2000	Micro/RSX 2780/3780 Emulator
Micro/RSX 3271 Protocol Emulator	MUX200/VAX
NMCC DECnet Monitor	NMCC/VAX ETHERnim
RSX-11/P.S.I./M	UN1004/RSX
VAX 2780/3780 Protocol Emulator	VAX 3271 Protocol Emulator
VAX NTR Protocol Emulator	VAX OSI Transport Service
VAX P.S.I. and P.S.I. Access	VMS SNA

The DECnet SNA Gateway and VMS SNA products are not installed with a System Startup Package, but the installation service may be purchased separately as an Orientation and Installation Service. Any DECnet SNA Access Routines purchased with DECnet SNA Gateways or VMS SNA are installed as part of the Orientation and Installation Service. This includes the following products (Software Product Description numbers are in parentheses):

- DECnet SNA VMS APPC/LU6.2 Programming Interface (SPD 26.88.00)
- DECnet SNA VMS Application Programming Interface (SPD 26.86.00)
- DECnet SNA VMS Data Transfer Facility (VMS server and VMS client) (SPD 27.85.00)
- DECnet SNA VMS DISOSS Document Exchange Facility (SPD 26.72.00)
- DECnet SNA VMS Distributed Host Command Facility (SPD 26.71.00)
- DECnet SNA VMS Printer Emulator (SPD 26.70.00)
- DECnet SNA VMS Remote Job Entry (SPD 26.85.00)
- DECnet SNA VMS 3270 Data Stream Programming Interface (SPD 26.87.00)
- DECnet SNA VMS 3270 Terminal Emulator (SPD 26.84.00)

Network Configuration Guidelines



This section contains the following topics:

802.3/Ethernet Configuration Guidelines	**A-1**
FDDI Configuration Guidelines	**A-48**
Configuring the Messaging Network	**A-63**

Network Configuration Guidelines

802.3/Ethernet configuration guidelines focus on connecting terminals, communications servers, and host systems to a local area network. The guidelines follow a brief overview of configuration guidelines for Phase IV networks including a discussion of connecting Phase III to Phase IV networks.

The information here, together with the product descriptions, should help in preparing a preliminary network plan. Digital sales representatives and network specialists can give detailed network planning assistance. ▲ Consult your sales representative for the performance guidelines of these products.

Phase IV Network Terms

Full-function node — A node that originates, terminates, and acts as a transit node for data. It can have multiple lines.

End-node — A node that originates and terminates data but cannot act as a transit node for data destined for other nodes: a single physical line. The difference between full-function nodes and end-nodes is strictly in the DECnet software.

Router — A dedicated communications server that acts as a transit node for data destined for other nodes. A router server is a combination of hardware and software, and is not an originating or terminating node. To maintain routing performance, applications software should run on a router server.

DNA Phase IV Network Configuration Guidelines

The number of full-function nodes and router servers in a network should be kept down because of the overhead associated with routing. The goal is to minimize the use of full-function (routing) nodes and maximize the use of end-nodes. Although end-nodes cannot act as transit nodes, they require less memory, have a single physical link, can spend more time running user applications, and require very little network management.

The following table shows architectural limits, aggressive limits, and conservative limits for router servers in one local area network. Architectural limits cannot be exceeded in any circumstances: While DNA Phase IV networks have fixed architectural limits, most configurations will not be affected by them. Aggressive limits are not fixed but represent the point where both performance and memory requirements should be analyzed: exceeding these guidelines requires careful analysis by a network consultant or software specialist. Conservative limits represent a point that is easily achievable and where communications performance is acceptable.

Phase IV Network Limits Per Area

	Architectural	Aggressive	Conservative
Number of router servers per local area network	32	16	8

Remote Multipoint Configurations and Guidelines

The conventional point-to-point method of connecting remote VAX systems is shown in the following figure.

Conventional Point-to-Point Remote Configuration

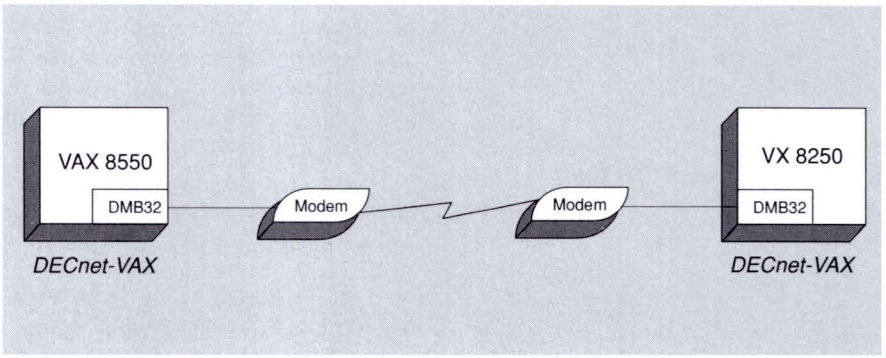

TBG-093-00

The following guidelines apply only to remote multipoint configurations. Local multipoint links should use more cost-effective 802.3/Ethernet connections.

- Remote multipoint configurations reduce phone line costs in leased private line networks. They offer a substantial amount of savings for large, geographically dispersed transaction-processing applications over the alternative dialup lines.
- No nested multipoint configurations should be used. This is not a technical limitation, but rather a proven rule for customer success. The following figure illustrates a nonnested configuration.
- Refer to individual Software Product Descriptions for supported remote multipoint configurations (such as the number of tributaries per control node).

Remote Multipoint Nonnested Configurations

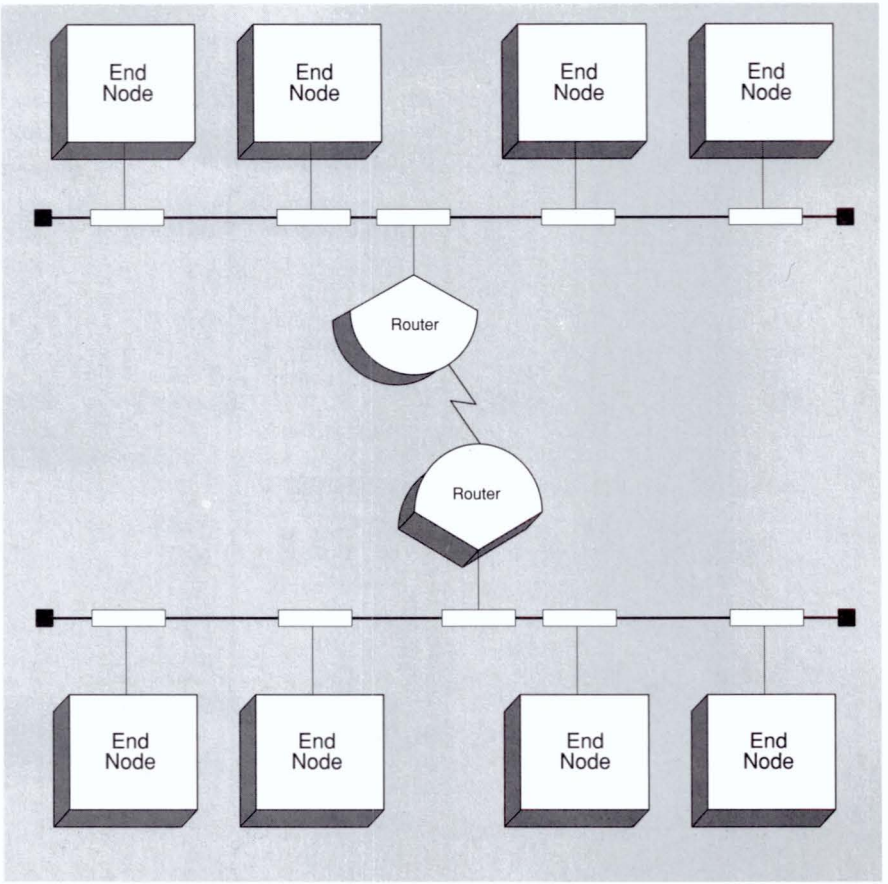

TBG-094-00

Converting Networks from Phase III to Phase IV

This section is for customers who have Phase III networks and are interested in converting to Phase IV. The following figure illustrates a typical Phase III network that includes local and remote links and a mix of CPUs and operating systems. Note the number of communications controllers, modems, and lines required to implement this network.

Typical Phase III Network

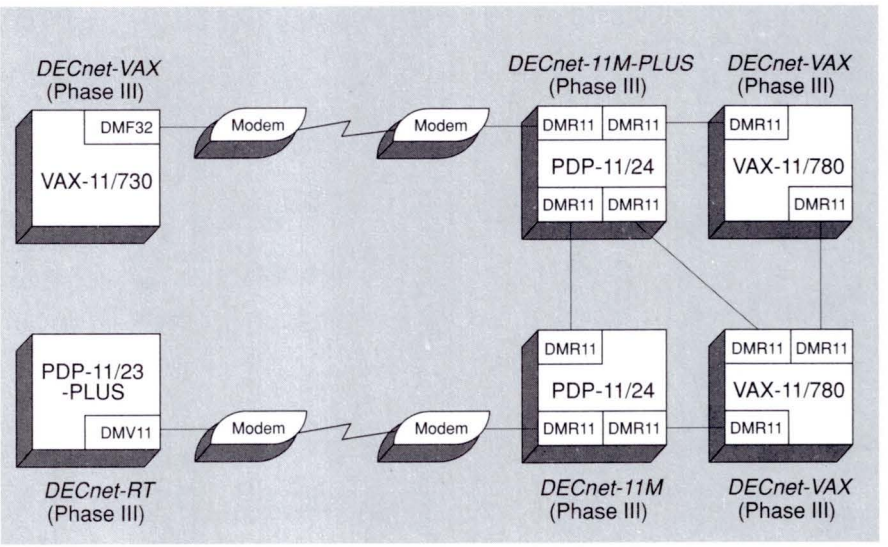

TBG-095-00

The following figure illustrates a Phase IV network with the same level of connectivity as the previously described Phase III network. Note that the Phase IV network uses a standard baseband 802.3/Ethernet cable and 802.3/Ethernet communications controllers rather than the traditional communications controllers shown in the Phase III network. In this example, all systems (except the DECnet-RT system) are running Phase IV software and are directly connected to the local area network.

The Phase IV network can have a maximum of 63 areas with up to 1,023 nodes per area for a total of 64,000 nodes. This total is especially important because of the number of personal computers now included in networks.

802.3/Ethernet-Based Phase IV Network

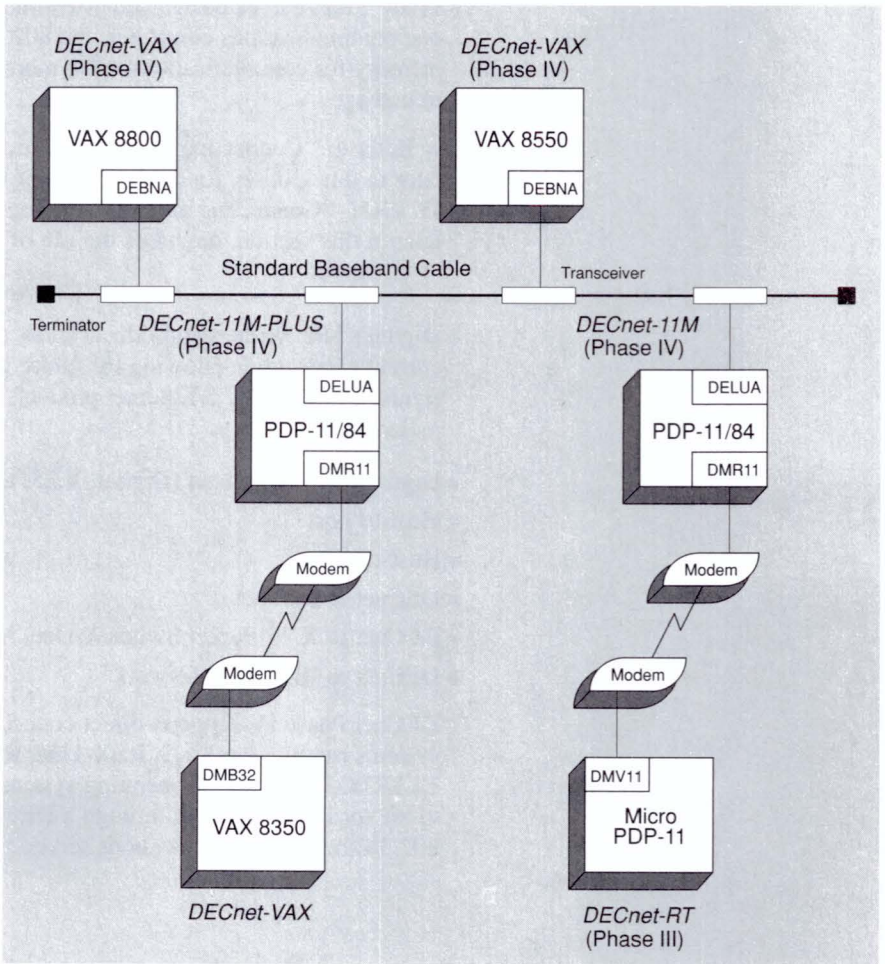

TBG-096-00

A comparison between the Phase III and Phase IV networks shows the following:

- There is a significant cost savings and performance improvement with the Phase IV network. For example, a transceiver plus the 802.3/Ethernet communications controller costs less and performs better than a synchronous DMR11.
- The Phase IV network increases configuration flexibility:
  - Transceivers can be easily relocated along the standard baseband cable.
  - 802.3/Ethernet technology eliminates the need for redundant lines within the local portion of the network.
  - A node can be added or removed from the LAN for maintenance without affecting the operation of the rest of the LAN.
- Many nodes can be designated as end-nodes. This means that they need only one communications controller (the 802.3/Ethernet controller), they require less memory for communications, have more time to run applications, and are easier to manage.

▲ Refer to "Connecting Shared Resources to an 802.3/Ethernet LAN," discussed later in this section, for a description of the use of the Terminal Server in a Phase IV LAN. "Connecting an 802.3/Ethernet LAN to Remote Networks," discussed later in this section, describes the use of router servers in Phase IV networks.

802.3/Ethernet-Based Products

Digital's 802.3/Ethernet products allow a network configuration to be tailored to current needs while allowing for future growth. As illustrated in the following figure, Digital's 802.3/Ethernet products provide many types of communication, including:

- Digital terminal-to-host (Digital, X.25, and IBM hosts)
- Host-to-host
- Host-to-server
- DECnet to DECnet
- DECnet to X.25 Packet Switched Data Network (PSDN)
- DECnet to IBM SNA network

DECnet Phase IV supports direct connection to local area networks for host systems running the VMS, RSX-11M, RSX-11M-PLUS, Micro/RSX, RSTS/E, ULTRIX-32, and P/OS operating systems. DECnet Phase III systems can connect to the local area network through a DECnet Phase IV host or through an 802.3/Ethernet communications server.

DECnet Network with Many Segments

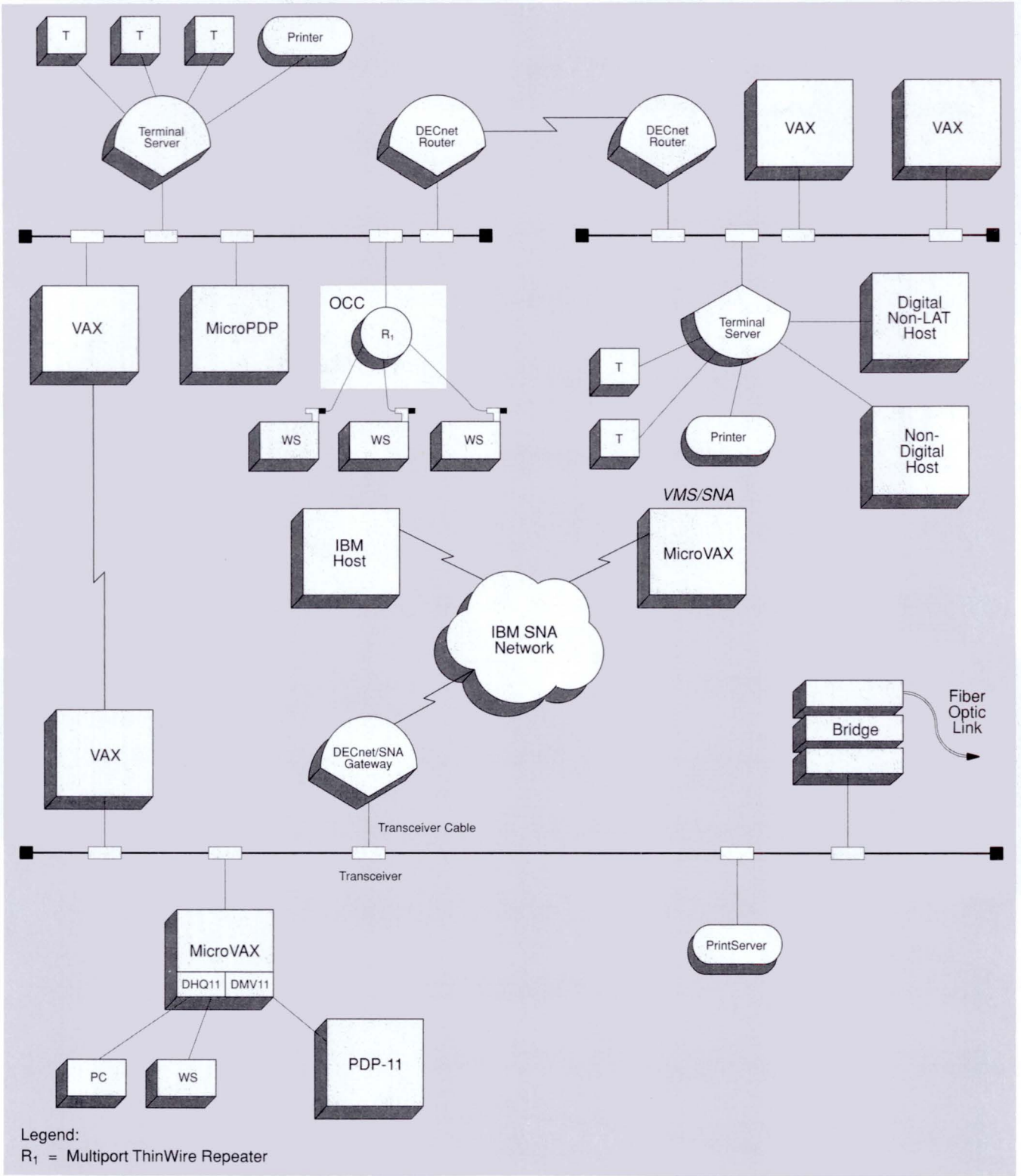

Legend:
R_1 = Multiport ThinWire Repeater

TBG-097-00

DECstart Network with Many Segments (Continued)

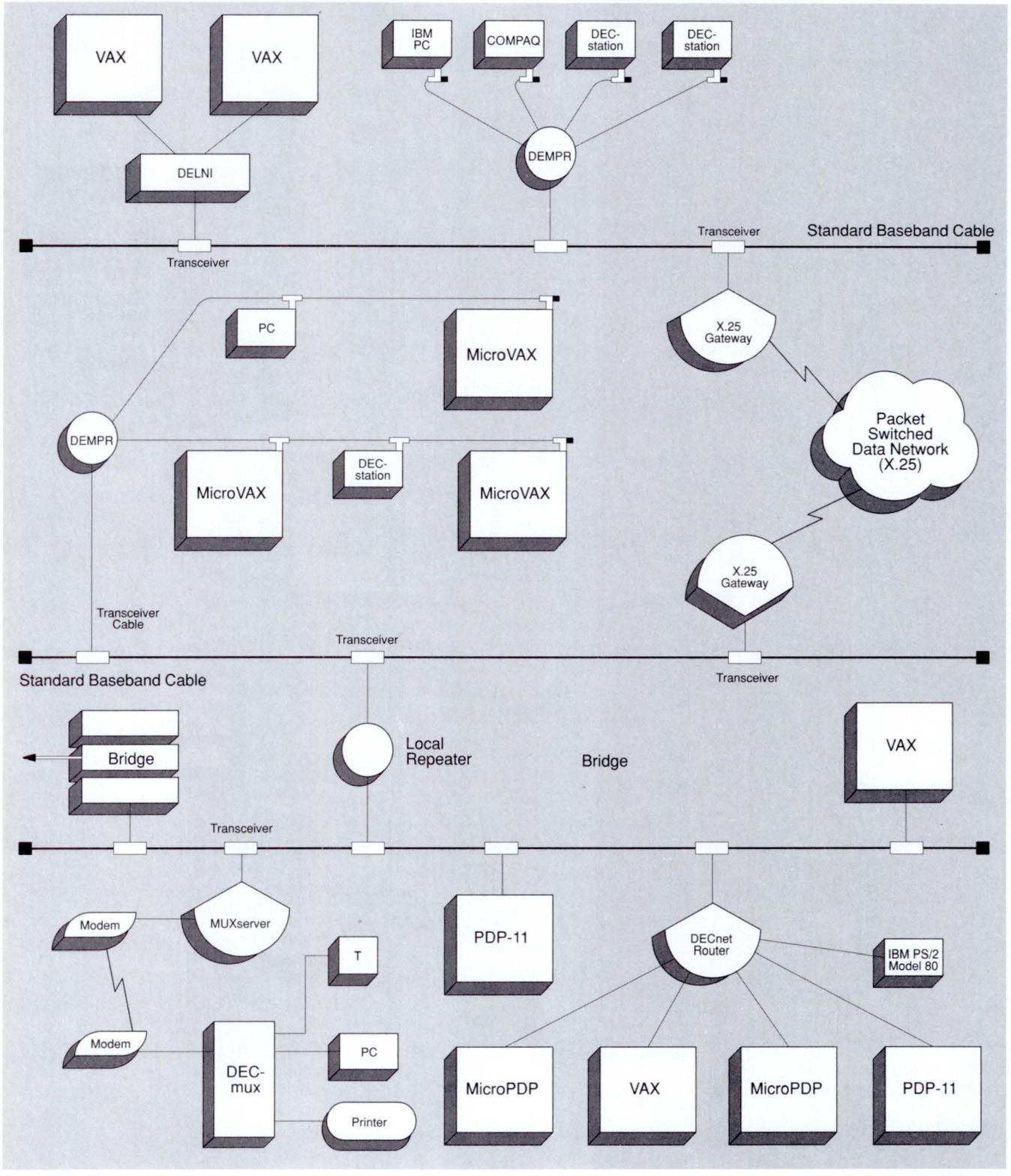

TBG-098-00

Planning a Baseband 802.3/Ethernet LAN

Planning a baseband 802.3/Ethernet LAN can be divided into three phases:

- Planning the physical channel layout. This is necessary for all networks, regardless of the type of equipment to be connected to the network.
- Connecting shared resources to an 802.3/Ethernet LAN, including connecting terminals and host systems.
- Connecting an 802.3/Ethernet LAN to remote networks, including connecting an LAN to other networks, such as DECnet, X.25 Packet Switched Data Networks (PSDNs), and IBM SNA networks.

Planning the Physical Channel Layout

A flexible 802.3/Ethernet local area network begins with a carefully planned physical channel layout, which includes the following:

- Standard 802.3/Ethernet, fiber optic, ThinWire, and/or unshielded twisted-pair cable
- Connectors, terminators, and ground clamp
- Transceivers and transceiver cable
- Repeaters

Placement of these components must be carefully planned and marked on a physical channel layout plan. This plan is used later for the network installation.

The physical channel layout plan starts with a building layout plan. This plan is then marked for the placement of cables and repeaters. The plan also shows the placement of the host computer systems and servers, including existing systems, possible future relocations of those systems, and possible future equipment.

Standard 802.3/Ethernet Cable

Standard 802.3/Ethernet cable is the backbone of a local area network; however, fiber optics is the preferred media for the backbone. A standard cable segment can be a maximum of 500 meters (1,640 feet) long and must be grounded at a single point to the building's ground system. A segment can consist of smaller cable sections joined by barrel connectors. These cable sections must be at least 2.5 meters (8.2 feet) long.

For example, a 257.4-meter (844-foot) segment could be made up of two 117-meter (384-foot) sections and a 23.4-meter (77-foot) section. This would require two barrel connectors as shown in the following figure.

Standard 802.3/Ethernet Cable Segment Using Barrel Connectors

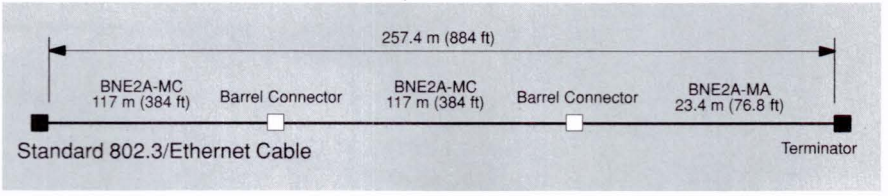

TBG-099-00

Segments up to 500 meters (1,640 feet) long can be made by using barrel connectors; a repeater or bridge is required beyond 500 meters. Because barrel connectors incur a small delay, a large number might cause delay problems.

The installation of the main 802.3/Ethernet cable segment and the connection of branching segments should be carefully planned. Planning the placement of equipment at this stage can save time later when connecting host systems and servers to the local area network (even while it is operating).

Connectors and Terminators

Barrel connectors connect two standard baseband cable sections, creating a segment up to a maximum length of 500 meters (1,640 feet).

Terminators (50 ohms) electronically terminate the ends of a standard baseband cable segment. Each end of the cable section must have either a terminator or a connector.

Fiber Optic Cable

General purpose fiber optic cable, plenum fiber optic cable (used where the cable path is through air plenums), and aerial fiber optic cable (for connecting buildings through the air or in conduit underground), are available through other vendors. Installation requirements for all three types of fiber optic cable are given below.

Digital recommends the use of 62.5/125 micron optical fiber for connecting all its fiber optic network products. Both the ANSI X3T9.5 (FDDI) and EIA/TIA 568 Building Wiring standards recommend this fiber type.

The optical fiber specified for use in all cable constructions must be 62.5-micron core and 125-micron cladding, dual-window, graded-index profile, multimode glass-on-glass construction (EIA Class 1a).

The 2.5 mm Bayonet ST-style connector type is recommended for Digital's current fiber optic LAN networks. The ST-style is generally a lower loss connector type than the traditional SMA-style. The ST connector is designed for use with 62.5/125 fiber type. ST-to-SMA patch cable assembly is required when connecting current fiber optic LAN Bridge 150 (DEBET) and fiber optic repeaters DECrepeater 200 (DEREN-RP/RQ only) to ST-based cable plants.

Digital fiber optic cable certification is needed to assess proper connectivity and determine if the installation meets acceptable attenuation limits. Certification is also required for Digital Customer Services to support an installation. A Digital Customer Services Network Planning Consultant or Digital-recommended installer (see Section 9) can provide this service.

The fiber optic cable and connectors must meet certain requirements: operating temperature and humidity must be within the ranges listed in the following table.

Operating Temperature and Humidity Ranges for Fiber Optic Cable

Cable	Operating Temperature	Humidity
PVC	0° C – 55° C	5–95%, noncondensing
Aerial	–30° C – 60° C	5–95%, noncondensing
Plenum	0° C – 70° C	5–95%, noncondensing

ThinWire 802.3/Ethernet Cable

ThinWire cable is recommended for offices and other local work areas to bring 802.3/Ethernet capability to personal computers, workstations and low-end systems. ▲ For more information, refer to "Planning a ThinWire 802.3/Ethernet LAN," discussed later in this section.

Unshielded Twisted-Pair Cable

Unshielded twisted-pair cable is recommended for those customers who have already installed telephone-type twisted-pair cabling, and want to minimize the cost and network disruption of installing new network cable. ▲ Refer to "Unshielded Twisted-Pair 10BaseT Configuration Guidelines," described later in this section, for more information.

Transceivers and Transceiver Cable

Devices are connected to standard baseband cable by means of a transceiver and transceiver drop cable. The transceiver transmits signals on the transceiver cable to the connected devices and detects message collisions. Transceivers mount on the standard baseband cable by means of a tap and can be easily installed using Digital's Ethernet Transceiver Installation toolkit.

The transceiver drop cable is available in standard and office types, both of which support Ethernet or IEEE 802.3 hardware. Office cable is thinner than standard cable and is easier to run in an office environment. Because office cables typically have a high signal loss, OPEN DECconnect recommends 3 meters (9.8 feet) of office cable.

Remember these rules when planning installation of transceivers and transceiver cable on the standard baseband cable:

- There is a maximum of 100 transceivers per standard 500-meter (1,640-foot) cable segment.
- Transceivers must be at least 2.5 meters (8.2 feet) apart. Standard 802.3/Ethernet baseband cable is premarked every 2.5 meters to ensure adequate spacing.
- Each transceiver needs a corresponding transceiver cable.
- Transceiver drop cable can be a maximum of 50 meters (165 feet) in length. Some devices have an internal cabling equivalency that must be subtracted from the 50-meter maximum. Consult the device's technical manual for the appropriate cable equivalency.

The following figure shows an 802.3/Ethernet network with each system attached to the standard baseband cable by means of a transceiver and transceiver cable. The systems communicate with the network through an 802.3/Ethernet communications controller.

802.3/Ethernet LAN with Connected Processors

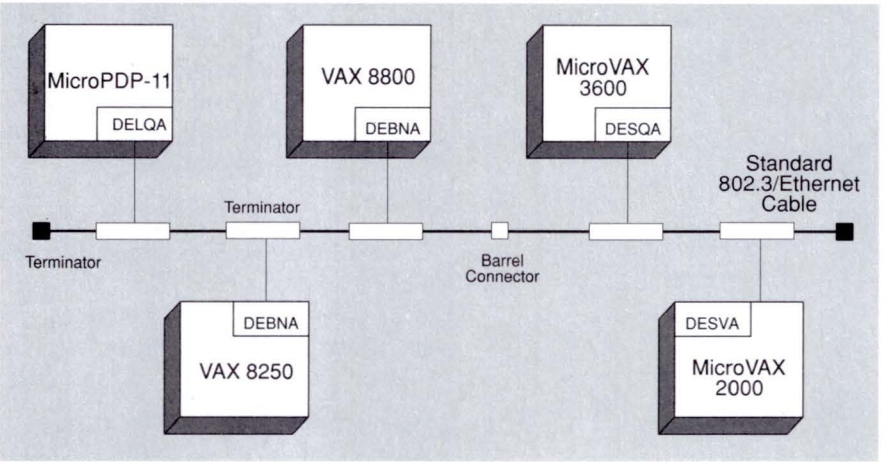

TBG-100-00

IEEE 802.3/Ethernet Repeaters

An IEEE 802.3/Ethernet repeater allows network expansion beyond the 500-meter (1,640-foot) limit of one standard Ethernet cable segment. Two local repeaters, four fiber optic repeaters, or one local and two fiber optic repeaters (the maximum allowed without an intervening bridge) can connect three standard Ethernet cable segments, making them function as if they were one cable by retiming, amplifying, and repeating all signals received from one segment, then passing the signals to the next segment.

Digital offers two repeaters for standard IEEE 802.3/Ethernet cable:

- Local repeater — Connects two standard IEEE 802.3/Ethernet cable segments in the same building. The two cable segments can be a maximum of 100 meters (328 feet) apart.
- Fiber optic repeaters — Connect two standard IEEE 802.3/Ethernet cable segments at greater distance, such as between buildings, using fiber optic cable.

  When four fiber optic repeaters are connected in series, the total length of fiber optic cable must be less than or equal to 1.0 km (3,280 feet). The distances are defined by the IEEE 802.3/Ethernet specifications.

Repeaters can be used effectively in a multi-floor building to expand a network. A backbone standard IEEE 802.3/Ethernet cable segment can be installed vertically from the basement to the top floor of a building with repeaters and a branching segment installed on each floor.

Consider these rules when planning LAN expansion using repeaters:

- A message transmitted on a local area network must pass through no more than two local repeaters (DECrepeater 200, DEMPR, DETPR, or DESPR) or, four fiber optic repeaters (DECrepeater 200), or one local and two fiber optic repeaters before either reaching its destination or passing through a LAN bridge.
- Fiber optic repeaters can be used to connect multiple IEEE 802.3/Ethernet segments. However, the total amount of fiber optic cable used in the path between any two nodes may not exceed 1.0 km (3,282 feet).
- A repeater cannot be connected to a DELNI.
- When the DECrepeater 200 is used with a transceiver without heartbeat (H4005 or H4000-BA), it operates as an IEEE 802.3 repeater. When used with the H4000, it operates as an Ethernet-compatible repeater. The DECrepeater 200's Auto-Select feature automatically configures the repeater in IEEE 802.3 or Ethernet mode, based upon the repeater's attached transceiver.

The following figure illustrates an 802.3/Ethernet LAN that has been expanded from one floor to another floor within the same building. In this example, because the distance between the two standard Ethernet cables is 100 meters (328 feet), a local repeater is used.

IEEE 802.3/Ethernet LAN Expansion Using a Local Repeater (100 m [328 feet] maximum separation between Ethernet cables)

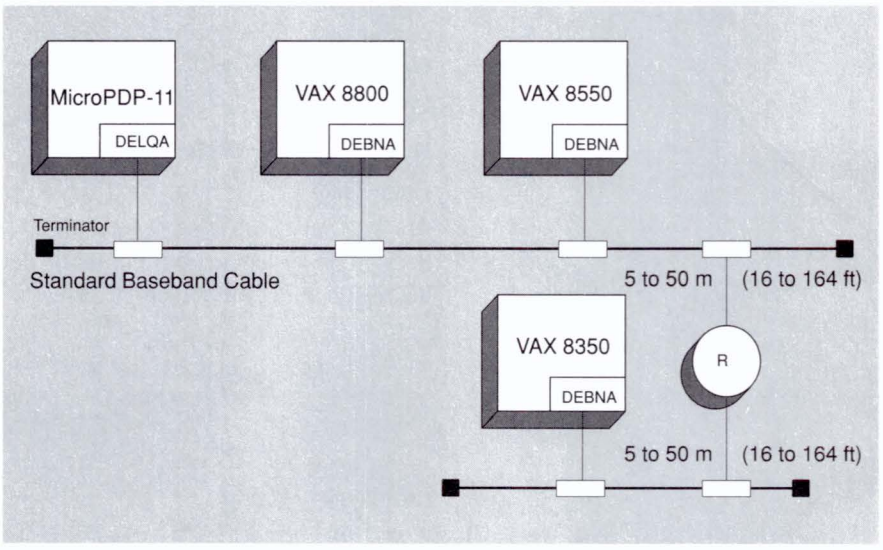

TBG-101-00

If it is necessary to expand the network to another building up to 1.0 km (3,282 feet) away, a fiber optic repeater is necessary as shown in the following figure. A LAN bridge is used rather than a repeater when it is necessary to keep local traffic within a building.

IEEE 802.3/Ethernet LAN Expansion Using a Fiber Optic Repeater (1.0 km maximum separation between repeaters)

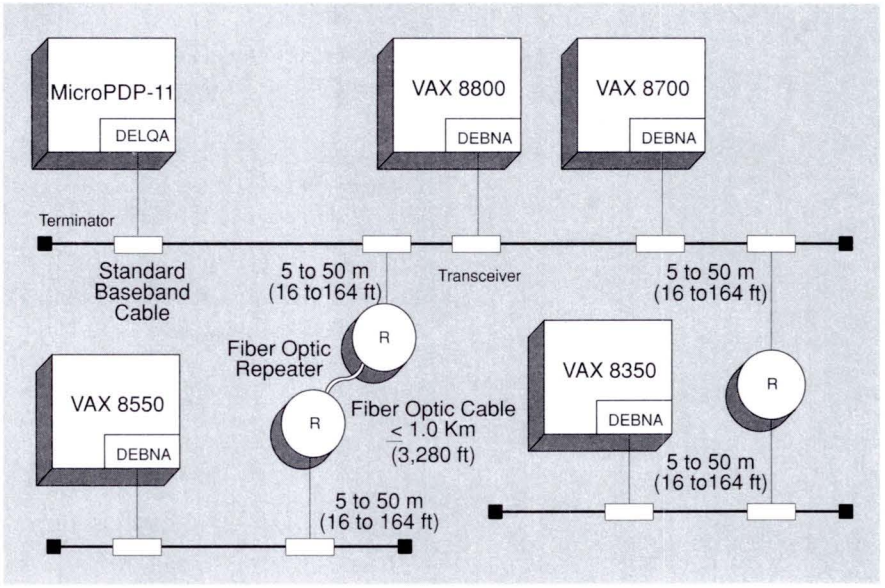

TBG-102-00

Local Network Interconnect (DELNI)

The Local Network Interconnect (DELNI) provides low-cost 802.3/Ethernet performance for a group of 802.3/Ethernet-compatible devices in a 50-meter (164-foot) area. The DELNI can be configured in three ways:

- Standalone
- Hierarchical standalone
- Connected

The DELNI standalone configuration, illustrated in the following figure, supports up to eight systems or system-based devices (not terminals) using standard 802.3/Ethernet transceiver cables up to 50 meters (164 feet) away.

DELNI Standalone Configuration

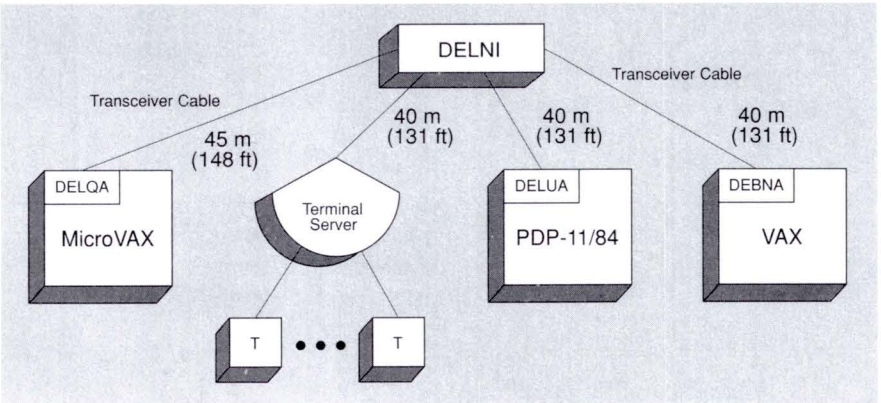

TBG-116-00

The DELNI hierarchical standalone configuration, illustrated in the following figure, supports a combination of DELNIs and devices using standard 802.3/Ethernet transceiver cables. The transceiver cable can be up to 50 meters (164 feet) in length to connect to another DELNI, and between 40 and 45 meters (131 and 148 feet) in length to connect to 802.3/Ethernet communications controllers. A DELNI hierarchical standalone configuration is not connected to the standard baseband cable.

DELNI Hierarchical Standalone Configuration

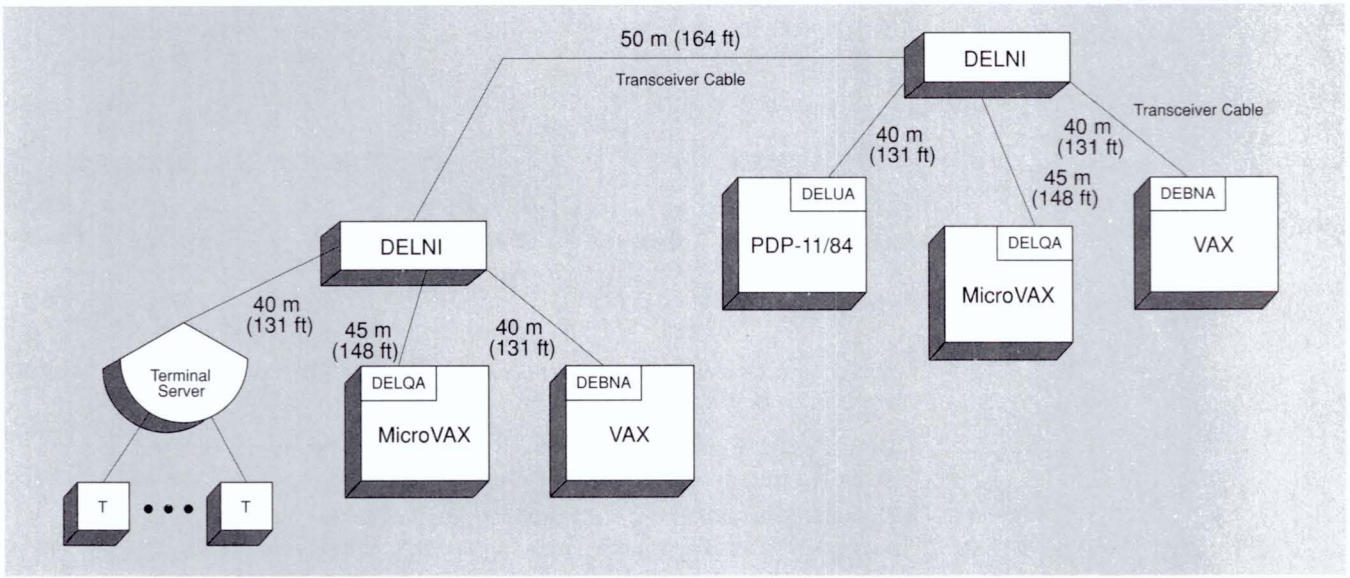

TBG-117-00

The DELNI connected baseband configuration, illustrated in the following figures, supports up to eight devices using standard transceiver cables. The total maximum length of transceiver cable is 40 meters (131 feet). In a baseband configuration without an Etherjack, this would be the sum of the length of the cables from the transceiver to the DELNI and from the DELNI to the host system or communications server. However, a particular controller may restrict this length. For example, the maximum cable length from the transceiver to the DELUA is 35 meters (115 feet).

In broadband configurations, the Chipcom Ethermodem should not be used with a DELNI because this is an unsupported configuration.

DELNI Connected Configuration

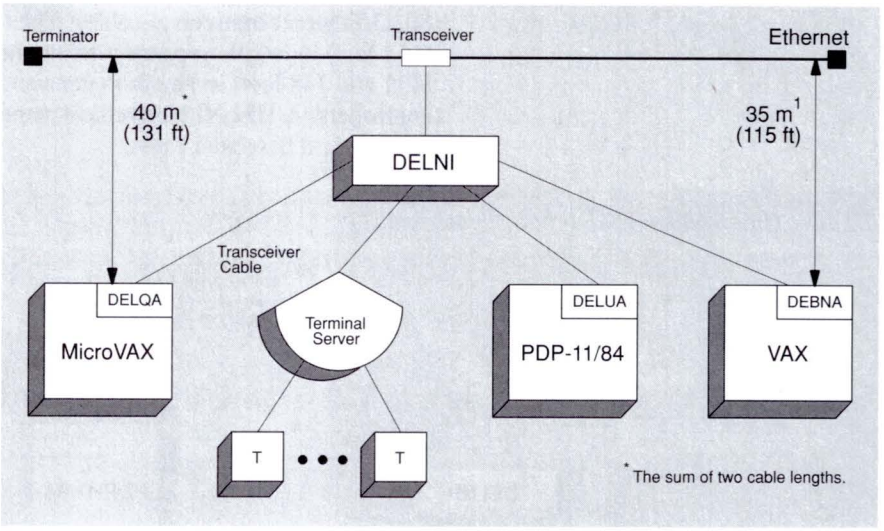

TBG-118-00

Connecting Servers

Servers are specialized network nodes that act as shared resources. Three types of servers can be used on an 802.3/Ethernet LAN:

- Digital's 802.3/Ethernet communications server hardware/software packages including routers and gateways.
- Digital's general purpose software that provides server functions in the network, such as file transfer, remote job entry, and remote printing.
- Multivendor applications servers written by users, for example, a computer node that provides typesetting services using software written by a customer or another vendor.

All three types of servers connect to a standard 802.3/Ethernet transceiver or to a Local Network Interconnect (DELNI).

Standard Baseband Ethernet Distance Guidelines

Standard baseband 802.3/Ethernet is a branching, nonrooted tree topology with a maximum node separation (the distance between the two farthest systems on the network) of 2.8 km (1.74 miles). Up to 1,023 transceivers can be connected to the standard baseband cable, allowing thousands of devices to be connected.

The 2.8 km (1.7 miles) maximum distance between any two nodes is the sum of two 50-meter (164 feet) transceiver cables connected to the nodes, three 500-meter (1,640-foot) standard 802.3/Ethernet cable segments, four 50-meter (164-foot) transceiver cables connected to repeaters, and 1.0 km (3,280 feet) of fiber optic cable.

A few simple rules for configuring a standard 802.3/Ethernet local area network, derived from certain limits that are imposed on the physical channel, ensure the optimal performance of the network. The maximum configuration for an 802.3/Ethernet local area network is as follows:

- A segment of standard baseband cable can be a maximum of 500 meters (1,640 feet) in length. Each segment of standard baseband cable is terminated at both ends, at which point transmitted signals stop.

- There can be a maximum of 100 physical connections (transceivers) on any segment of cable (at 2.5-meter [8.21-foot] intervals). Note that a number of devices can be connected to one transceiver by means of a DELNI.
- Repeaters are used to continue signals from one segment of the local area network to another. A repeater requires a transceiver connection on both segments it joins and counts toward the 100 transceiver maximum for each segment. A message transmitted on a local area network must pass through no more than two local repeaters (DECrepeater 200, DEMPR, DETPR, or DESPR), four fiber optic repeaters (DECrepeater 200, DEREP), or one local and two fiber optic repeaters before either reaching its destination or passing through a LAN bridge.
- The network must be grounded at one point.
- The maximum length of standard baseband cable between any two transceivers is 1.5 km (4,920 feet).
- A total of 1.0 km (3,280 feet) of fiber optic cable is allowed for expanding the network using fiber optic repeaters.
- A standalone DELNI configuration supports up to eight devices (systems, not terminals) using transceiver cables between 40 and 45 meters (131.2 and 147.6 feet) in length, depending on the communications controller.
- A hierarchical standalone DELNI configuration supports up to 64 devices using standard transceiver cables between 40 and 45 meters (131.2 and 147.6 feet) in length, depending on the communications device, and up to 50 meters (164 feet) for another DELNI which, in turn, can support devices between 40 and 45 meters (131.2 and 147.6 feet) in length, depending on the communications device. A hierarchical standalone DELNI LAN is not connected to the standard baseband cable.
- A connected DELNI configuration supports up to eight devices using standard transceiver cables between 35 and 40 meters (114.8 and 131.2 feet) in length, depending on the communications device.
- Transceiver cable length is limited to 50 meters (164 feet) for connection to host systems and communications servers.
- Some devices have internal cabling that may reduce the effective length of the transceiver cable.

Baseband 802.3/Ethernet Distance Guidelines

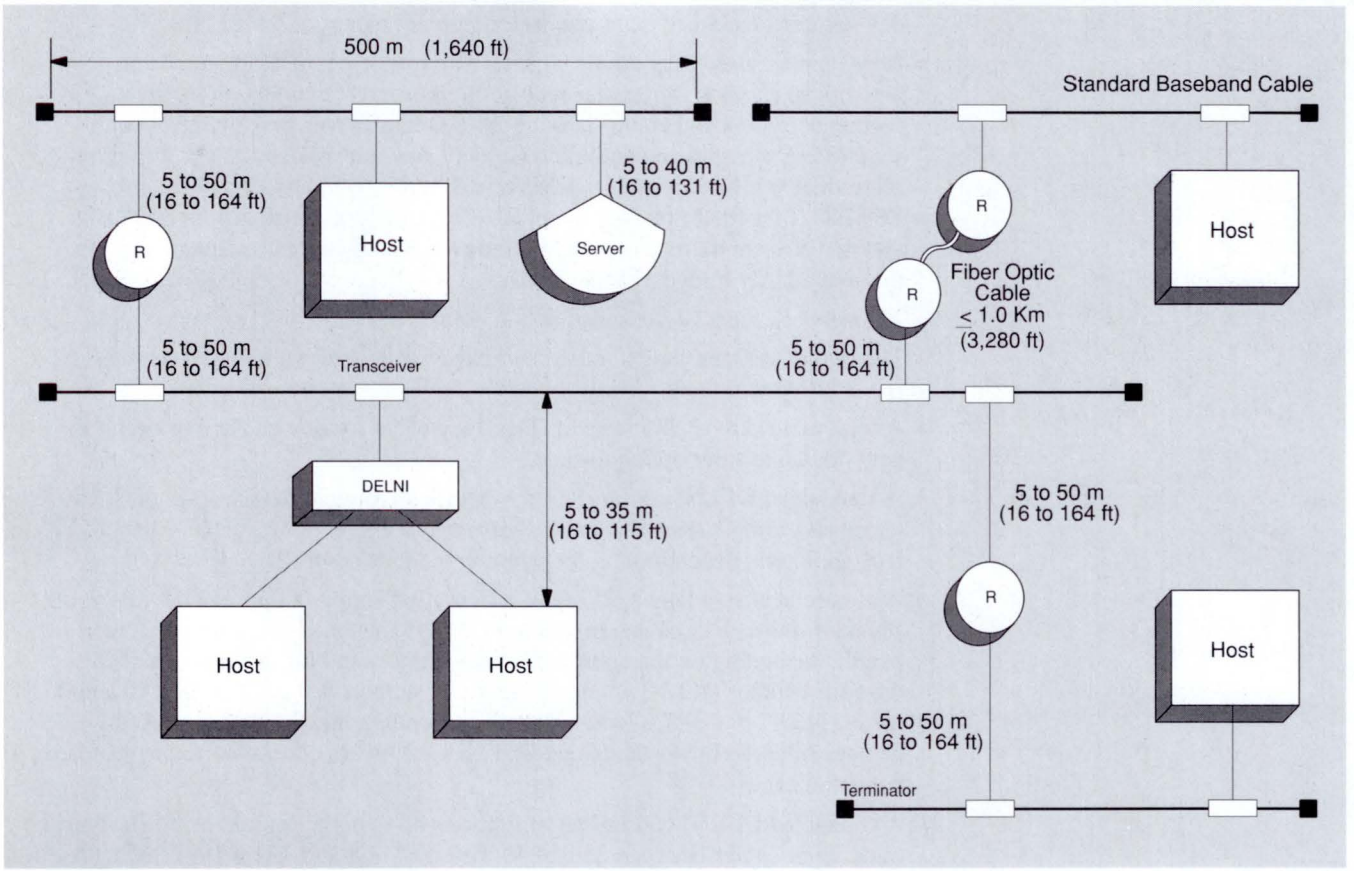

TBG-103-00

Planning an Unshielded Twisted-Pair 802.3 LAN

Since fiber optic cable is recommended for use as the preferred backbone media, unshielded twisted-pair cabling is the recommended media for horizontal runs to the office. This brings 802.3/Ethernet capability to the end user. It is cost-effective and efficient in that it uses existing 8-wire telephone twisted-pair cabling. Unshielded twisted-pair cabling for 802.3/Ethernet applications is an alternative baseband cabling system that can be configured as a standalone network or connected to the backbone cable in local work areas. Unshielded twisted-pair products include multiport repeaters (DETPR), transceivers (H3350), EtherWORKS Turbo/TP PC controllers (DE201), and connection components.

▲ Refer to "Unshielded Twisted-Pair Cable Guidelines," in this section for more information.

Three configurations are recommended for unshielded twisted-pair installations: small workgroup, standalone departmental, and connected departmental.

Small Workgroup Configuration

The small workgroup configuration allows users to connect personal computers, workstations, low-end systems, 802.3/Ethernet communications servers, and other desktop devices using unshielded twisted-pair cabling and media access unit (MAU) transceivers. An RJ45 connector is on the EtherWORKS Turbo/TP PC controller, so the connection of a PC to the 10BaseT repeater is a direct attachment. Any desktop device other than a PC would need to connect by means of the MAU 10BaseT transceiver. Theoretically, up to 64 devices can be connected to a 100 meter (328 foot) unshielded twisted-pair segment. No daisy-chaining is allowed with any 10BaseT configurations.

Unshielded Twisted-Pair Workgroup/Departmental Configurations

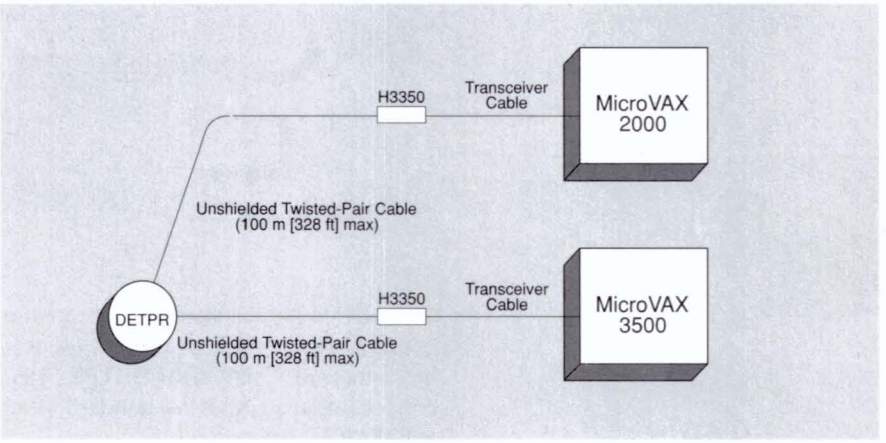

TBG-158-00

Workgroup/Departmental Configurations

The standalone workgroup/departmental configuration allows up to eight 100 meter (328 feet) runs to the multiport repeater (DETPR). The DETPR should be used in a physical star (radial) topology to connect personal computers, workstations, and low-end systems in a work area or throughout the floor of a building. The multiport repeater would then connect to an AUI fiber optic transceiver or thick wire coaxial AUI transceiver for connection to the backbone and access to more computing resources on the large local area network. Therefore, the DETPR can isolate faults in a segment so that the rest of the network will stay in operation. The following figure illustrates the standalone departmental configuration.

Unshielded Twisted-Pair/10BaseT Connected Departmental Configuration

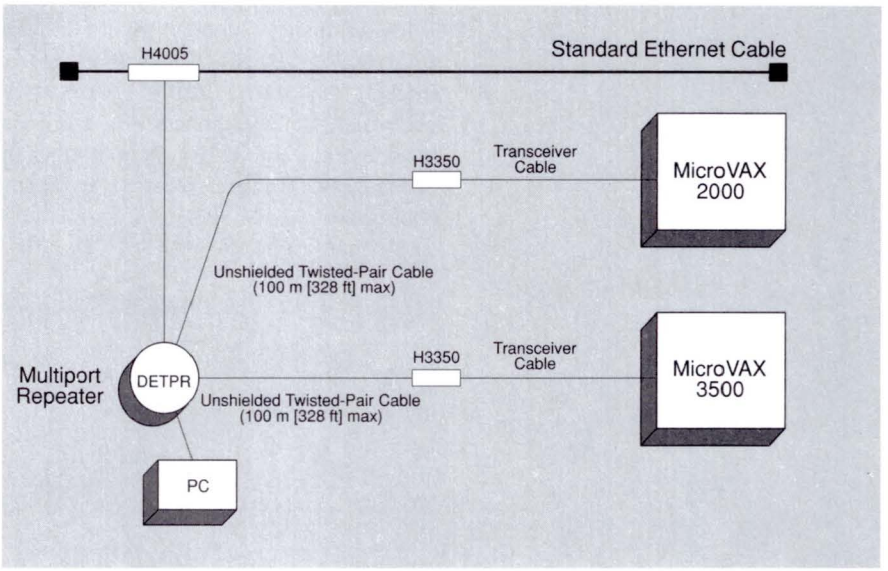

TBG-159-00

Eight DETPRs can also be connected to a DELNI in a standalone departmental configuration. In this configuration, the 802.3/Ethernet limit of 1,023 stations can be connected. Up to eight DETPRs can be connected to a DELNI, which connects to the backbone standard baseband cable using an H4005 (or H4000-BA) transceiver.

When connected to standard 802.3/Ethernet cable, the 10BaseT repeater connects all stations attached to it and all devices connected to the standard cable. The 10BaseT repeater must count as a full repeater when configuring an 802.3/Ethernet LAN, and only one other repeater can be configured in the path between the 10BaseT repeater and any station on the rest of the local rear network. For configuration simplicity, bridges rather than repeaters are recommended between standard 802.3/Ethernet segments where 10BaseT repeaters are attached.

Unshielded Twisted-Pair/10BaseT Configuration Guidelines

- A segment of unshielded twisted-pair cable can be a maximum of 100 meters (328 feet) in length.
- A section is a single length of unshielded twisted-pair cable with RJ45 connectors (8 MP modular plug) at each end.
- A maximum of 64 stations can be connected to a single unshielded twisted-pair segment by cascading two repeaters deep. The OPEN DECconnect communication's outlet, the 10BaseT repeater, the 10BaseT MAU transceiver, and the 10BaseT PC controller count as one station.
- A 10BaseT repeater must be connected to a standard baseband cable using either a baseband transceiver or a DELNI. The DELNI in this configuration cannot be connected to another DELNI, and it must connect to the standard baseband cable with an H4005 transceiver (or H4000-BA). The standard 802.3/Ethernet segment to which a DELNI/DETPR configuration is attached should not exceed 300 meters (984 feet). A DELNI/DEMPR or DELNI/DESPR configuration should not exceed 300 meters (984 feet).

- There must be only one ground per cable segment to ensure that no other connectors contact the ground. If the segment is attached to a 10BaseT repeater, the repeater provides the ground and no other ground connections are allowed.
- In an OPEN DECconnect wiring system, unshielded twisted-pair cabling can be used to supply 802.3/Ethernet capability from an HDF/ODF to a communications outlet in an office or other work area, as long as the 100 meter (328 feet) distance requirement is observed. ▲ Refer to Section 2 for more information.

An unshielded twisted-pair cable segment can have concurrent data services within the same sheath (as specified in the 10BaseT standard). High- or low-speed data, can be used within the same cable sheath.

When configuring 802.3/Ethernet twisted-pair products, the cable qualification is as important as the product itself. Customers planning to use existing wiring and 10BaseT technology qualify for testing if they can answer "yes" to the following questions.

- Is your wire unshielded twisted-pair?
- Is it one of the following types : OPEN DECconnect unshielded twisted four-pair cable (H8245/H8246) or equivalent, AT&T Type C or D?
- Is your wiring newer than two years old?
- Does each sheath contain at least four pairs of wire?
- Is the cable currently unoccupied?

Planning a ThinWire 802.3/Ethernet LAN

Since standard baseband 802.3/Ethernet can be used as a backbone if the network usage allow, ThinWire is an accepted media for use within the work area and horizontal. ThinWire 802.3/Ethernet cable is an alternative baseband cabling system that can be configured as a standalone network or connected to the backbone cable in local work areas. ThinWire 802.3/Ethernet products include ThinWire coaxial cable, multiport repeaters (DEMPR), singleport repeaters (DESPR), station adapters (DESTA), and connection components.

Three configurations are recommended for ThinWire installation: small workgroup, standalone departmental, and connected departmental.

Small Workgroup Configuration

The small workgroup configuration allows users to connect personal computers, workstations, low-end systems, and 802.3/Ethernet communications servers using ThinWire cable and T-connectors. A segment of ThinWire cable is divided into sections. Two sections of cable are joined by a T-connector and the bottom of the "T" is inserted into a DESTA or ThinWire 802.3/Ethernet communications controller. The DESTA has a 15-pin D-connector for attachment to standard 802.3/Ethernet devices and a BNC-connector for connection to ThinWire. Up to 30 devices can be connected to a 185-meter (607-foot) ThinWire segment.

ThinWire Small Workgroup Configuration

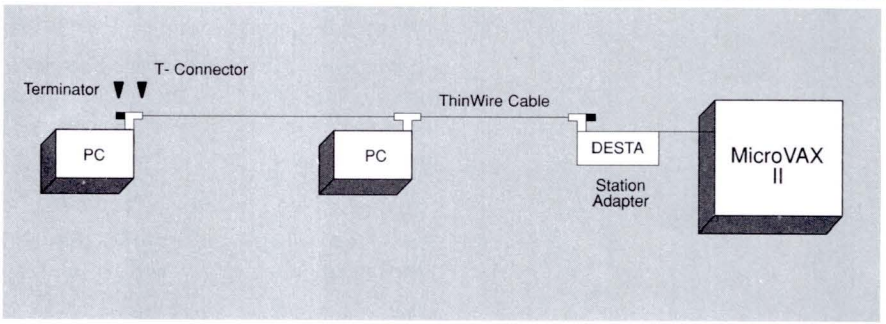

TBG-104-00

Standalone Departmental Configurations

The standalone departmental configuration allows up to eight 185-meter (607-foot) ThinWire segments to connect to the multiport repeater (DEMPR). The DEMPR can be used in a radial topology to connect personal computers, workstations, and low-end systems in a work area or throughout the floor of a building. Each of the eight ThinWire cable segments that connect to the DEMPR can accommodate up to 29 stations. Therefore, one DEMPR can connect 232 stations. The DEMPR will isolate faults in a segment so that the rest of the network will stay in operation. The following figure illustrates the standalone departmental configuration.

ThinWire Standalone Departmental Configuration

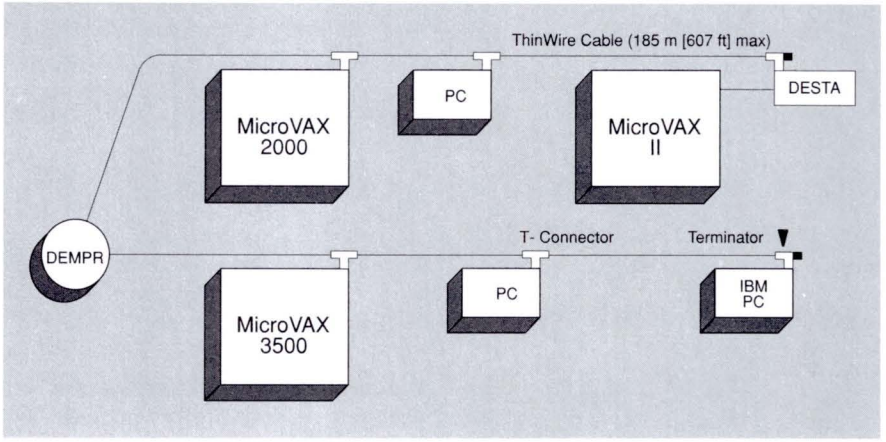

TBG-105-00

Eight DEMPRs can also be connected to a DELNI in a standalone departmental configuration. In this configuration, the 802.3/Ethernet limit of 1,023 stations can be connected.

Connected Departmental Configurations

In connected departmental configurations, ThinWire segments connect to the backbone cable for access to more computing resources on the larger local area network. Up to eight ThinWire segments can connect to a DEMPR, which connects to the backbone cable by means of a baseband transceiver. In addition, up to eight DEMPRs can connect to a DELNI, which connects to the backbone standard baseband cable using an H4005 (or H4000-BA) transceiver.

When connected to standard 802.3/Ethernet cable, the ThinWire repeater functions as a repeater between all stations attached to it and all devices connected to the standard cable. The ThinWire repeater must count as a full repeater when configuring an 802.3/Ethernet LAN. Because it counts as a repeater, only one other repeater can be configured in the path between the ThinWire repeater and any station on the rest of the local area network. For configuration simplicity, bridges rather than repeaters are recommended between standard 802.3/Ethernet segments where ThinWire repeaters are attached. The following figure illustrates a ThinWire connected departmental configuration.

ThinWire Connected Departmental Configuration

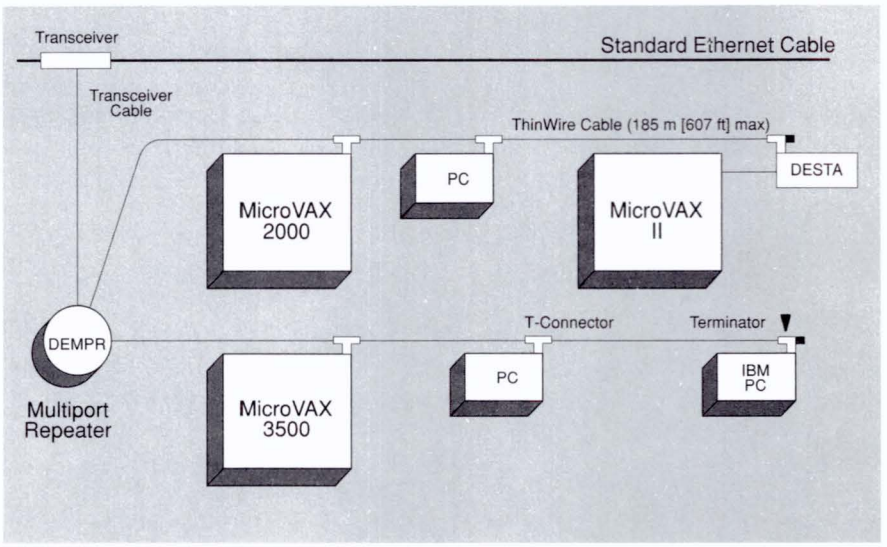

TBG-106-00

ThinWire Configuration Guidelines

- A segment of ThinWire cable can be a maximum of 185 meters (607 feet) in length. Each segment must be terminated at each end with 50-ohm terminators.
- A section is a single length of ThinWire cable with male BNC connectors at each end. ThinWire segments are composed of one or more sections of ThinWire cable connected by barrel- and/or T-connectors.
- A maximum of 30 stations (28 with the OPEN DECconnect System) may be connected to a single ThinWire segment. The OPEN DECconnect faceplate, the ThinWire repeater, a BNC T-connector, or barrel connector counts as one station. There must be 0.5 meters (19 inches) between T-connectors.
- A ThinWire repeater provides internal cable termination and can therefore be placed only at the end of a segment.
- A message transmitted on a local area network must pass through no more than two repeaters (DEREP, DEMPR, or DESPR) before either reaching its destination or passing through a LAN bridge.
- A ThinWire repeater must be connected to standard baseband cable using either a baseband transceiver or a DELNI. The DELNI in this configuration cannot be connected to another DELNI, and it must connect to the standard baseband cable with an H4005 transceiver (or H4000-BA). The standard 802.3/Ethernet segment to which a DELNI/DEMPR or DELNI/DESPR configuration is attached may not exceed 300 meters (984 feet).

- A station requiring a DESTA must be connected directly to the DESTA with transceiver cable. The DESTA must connect directly to the BNC T-connector. No cable is allowed between the DESTA and the BNC T-connector. The DESTA cannot be connected to a DEREP.
- There must be only one ground per cable segment. Ensure that no other connectors contact the ground. If the segment is attached to a ThinWire repeater, the repeater provides the ground and no other ground connections are allowed.
- ThinWire cable segments must never be configured in a loop.
- ThinWire cable segments must never have any branch segments. All T-connectors must attach directly to stations, not to other segments of ThinWire cable.

OPEN DECconnect ThinWire Configurations

ThinWire can be used to supply 802.3/Ethernet capability from a Satellite Equipment Room and/or OCC to a faceplate in an office or other work area, as long as the 185-meter (607-foot) distance requirement is observed. ▲ Refer to Section 2 for more information.

Connectivity Reference Table

The following table shows:

- How various desktop devices can be connected through the OPEN DECconnect unshielded twisted-pair System 1.
- How various desktop devices can be connected through the OPEN DECconnect Systems 2 and 3.
- How various desktop devices can be connected through the OPEN DECconnect ThinWire systems.

Connectivity Reference Table

		Office Components			Equipment Room Components		
Desktop Deivce	**System**	**Ethernet Controller**	**Office Cable**	**Adapter**	**Equipment Cable**	**Adapter**	**Active Equipment**
Terminals							
VT200, 320, 420, 330+	1				BN24K-03		DSRVB/DL CXA16
340+ (select 1, 2, or 3)	2		BN24H		BN24K-03	H8575-A	DSRVB/MC
	3		BN24H		BN24L-03		CXY08
VT1200, VT1300		Integral	BC16M and BC16U	H3310-AA	BC16U and BC16K	H3330-AA H3340-AA	DSRVF
Personal Computers							
DECstation 212LP, 316sx, 316+, 325c, 333							
Compaq Deskpro (Mod. 2) 286 (Mod. 40), 386 (Mod. 20)	1	EtherWORKS	BNE4A, BN24F	H3350-AA	BN24M-03		DETPR
IBM, PC/XT/AT	2	DE201-AA	BN24F		BN24M-03		DETPR
Olivetti (M24, M28, M240, M280	3	EtherWORKS	BN16M, BC16U	H3310-AA	BC16U and BC16K	H3330-AA H3340-AA	DEMPR_BA*
Zenith 248 (select 1, 2, or 3)							
IBM PS/2 Mod. 30, 50, 60, 80 (select 1 or 2)	1	DEMCA	BNE4A, BN24F	H3350-AA	BN24M-03		DETPR
	2	DEMCA	BN16M, BC16U	H3310-AA	BC16U and BC16K	H3330-AA H3340-AA	DEMPR_BA*
Workstations							
VAXstation 3100, 3520, 3540	1	Integral	BNE4A, BN24F	H3350-AA	BN24M-03		DETPR
DECstation 2100, 3100, 5000 (select 1 or 2)	2	Integral	BN16M, BC16U	H3310-AA	BC16U and BC16K	H3330-A H3340-AA	DEMPR_BA*

*The DEMPR-BA includes an H3300-AA 8-line UTP starter package. This package contains 8 office adapters (H3310-AA), 8 wiring closet adapters (H3330-AA), 1 rack installation kit (h3340-AA), kit of 8 office cables (BS16U-02), and a kit of 8 ThinWire equipment cables (BS16K-08). The BC16M ThinWire office cables and BC16U-10 equipment cables must be acquired separately.

Planning an Extended Baseband 802.3/Ethernet LAN

The extended LAN is an 802.3/Ethernet environment that uses bridges to connect several 802.3/Ethernet segments into one large network of up to 16,000 nodes. By using LAN bridges in network configurations, it is possible to extend network size without diminishing network performance.

The LAN bridge forwards packets destined for other segments of the extended LAN, filtering out the packets destined for a node within the same segment. This packet filtering allows the customer to configure a segment based on traffic flow, thereby making the best use of network bandwidth. For example, the bridge can be used to isolate a network segment with heavy traffic from the rest of the extended LAN.

The following configuration rules apply to standard, fiber optic, and microwave versions of the LAN Bridge 150 and LAN Bridge 200.

Configuration and Distance Guidelines

- An extended LAN may have up to 16,000 stations using the LAN Bridge 200 and 8,000 using the LAN Bridge 150.
- Digital recommends that an extended LAN have no more than seven bridges between stations. Protocols that have time-sensitive parameters may suffer performance loss if packets move through more than seven bridges, as a result of the accumulation of slight delays caused by the store-and-forward function.
- Bridges can be placed in parallel with other bridges to provide an auto-backup capability. Bridges causing loops in this situation automatically enter a backup state. A bridge that is in the backup state continues to monitor traffic on both LANs and, if the primary bridge fails, automatically activates and forwards messages.
- The LAN Bridge 150/200 can be used to connect network segments using any standard 802.3/Ethernet medium, that is coaxial cable, fiber optic cable, or microwave. ▲ Refer to the "Microwave Link" following this description for additional information concerning microwave connection implementation.
- Distance from the transceiver to bridge can be a maximum of 50 meters (164 feet), a total of 100 meters (328 feet) between segments. Internal cabling may reduce the effective length of the transceiver cable.

Mixed Spanning Tree Networks

The LAN Bridge 150/200 products include the IEEE 802.1 and LAN Bridge 100 Spanning Tree implementations to support the IEEE 802.1 standard and to be backwards-compatible with the LAN Bridge 100 installed base. The LAN Bridge 150/200 products automatically determine the appropriate Spanning Tree implementation based upon where other bridges are located in the network; the default is IEEE 802.1 Spanning Tree mode in the absence of LAN Bridge 100 Spanning Tree-only mode bridges.

LANs with two different Spanning Tree implementations running simultaneously have some risks associated with them. Consequently, Digital recommends users upgrade their LAN Bridge 100s to LAN Bridge 150s if the network includes LAN Bridge 100s and other vendors' 802.1 bridges. ▲ Refer to Section 2, "LAN Bridge 150," for product description information.

The following configuration guidelines and recommendations apply to those users who choose not to upgrade:

- Extend the backbone using only one implementation of Spanning Tree (preferably the 802.1 implementation used by the LAN Bridge 200 or LAN Bridge 150).
- Avoid configuring different Spanning Tree implementations in a loop (that is, redundant paths) as the results can be unpredictable. The following matrix provides a tool for determining allowable configurations based upon the loop detection employed by each device.

Determining Allowable Configurations Based Upon the Loop Detection of Each Device

Device	Parallel/Looped Configurations Supported?	Parallel/Looped Configurations Supported?	Parallel/Looped Configurations Supported?
	LAN Bridge 100	**LAN Bridge 100/150**	**Multivendor 802.1 Bridge**
LAN Bridge 100	Yes	Yes	No
LAN Bridge 100/150	Yes	Yes	Yes*
Multivendor 802.1 Bridge	No	Yes*	Yes

*Lock LAN Bridge 150/200 into IEEE 802.1 mode.

- Use one Spanning Tree implementation when creating mesh topologies while Spanning Tree implementation may be used at the network fringes (or "leaves" of the Spanning Tree).
- Make the LAN Bridge 150 or LAN Bridge 200 the designated bridge rather than a LAN Bridge 100.
- If LAN Bridge 100s are present in the same network with the LAN Bridge 150 and/or LAN Bridge 200 and another vendor's 802.1 Bridge, then the following configuration rules apply:
  - Lock the LAN Bridge 150 and LAN Bridge 200 into IEEE 802.1 mode (by means of DECelms), and
  - Place the LAN Bridge 100s at the network fringes

Fiber Optic Links

Fiber optic links can be built using two fiber optic bridges, two fiber optic repeaters, or one fiber optic bridge and one fiber optic repeater. Two bridges connected by a fiber optic link count as two in the seven-bridge limitation.

- When building links with fiber optic repeaters, there must be no more than 1.0 km (3,282 feet) of fiber between stations.
- Distance from the transceiver to the bridge can be a maximum of 50 meters (164 feet). Internal cabling may reduce the effective length of the transceiver cable.

- The fiber optic bridge and DECrepeater 200 (DEREN-RP/RQ) repeater utilize SMA-type connectors. SMA-to-ST patch cable assembly is required when connecting these products to ST-based cable plants. The fiber optic DECrepeater 200 (DEREN-RC/RD) utilizes ST-type connectors.
- When building links with the fiber optic bridge and fiber optic repeater (DEREP) combination, the length of the fiber optic link must be included as part of the configuration of the LAN to which the fiber optic repeater is attached. ▲ For more information, refer to the topic on Ethernet repeaters in "Planning a Baseband 802.3/Ethernet LAN" in this section.
- When building a link with two fiber optic bridges, each link length is limited by the system budget for signal loss. Therefore, with 62.5/125 micron fiber cable, a link with a power budget of 12.0 dB can be 3 km (1.9 miles) long. Many 3 km links can be built throughout the extended LAN.
- The fiber optic bridge and repeater are designed for optimum operation with 62.5/125 micron, multimode fibers, as well as 100/140, 85/125, and 50/125 fibers. The following table lists the distance and power budget specifications. Following are performance characteristics of fiber optic links.

Filtering rate (steady state*) = 29,760 pps

Forwarding rate (steady state*) = 14,880 pps

Connector type: ST — LAN Bridge 200 DEBAM-RC/RD/RF/RG

DECrepeater 200 DEREN-RC/RD

SMA — LAN Bridge 150 DEBET-RP/RQ

DECrepeater 200 DEREN-RP/RQ

DEREN-RC/RD-to-DEREN-RC-RD) Fiber Optic Links

Size (diameter in microns)	Power Budget (dB)	Attainable Distance (km)*
50/125	8.0	1.0
62.5/125	12.0	1.0
85/125	13.5	1.0
100/140	16.0	1.0*

*With no more than $^{1}/_{10}{}^{-10}$ bit error rate.

DEBAM-RC/RD-to-DEBAM-RC-RD) Fiber Optic Links

Size (diameter in microns)	Wavelength (nm)	Power Budget (dB)	Distance** (km)	Minimum Attenuation
50/125	850	9	2.0	N/A
62.5/125	850	14	3.0	N/A
85/125	850	15	2.8	N/A
100/140	850	16	2.8	4 dB

DEBAM-RC/RD-to-DECrepeater 200 (DEREN-RC/RD) Fiber Optic Link

Size (diameter in microns)	Wavelength (nm)	Power Budget (dB)	Distance** (km)	Minimum Attenuation
50/125	850	9	1.5	N/A
62.5/125	850	14	1.5	N/A
85/125	850	15	1.5	N/A
100/140	850	16	1.5	4 dB

DEBAM-RF/RG-to-DEBAM-RF/RG Fiber Optic Links

Size (diameter in microns)	Wavelength (nm)	Power Budget (dB)	Distance** (km)	Minimum Attenuation
50/125	1300	12	10	3 dB
62.5/125	1300	17	10	7 dB
85/125	1300	17	4	9 dB
100/140	1300	17	4	9 dB

*Assumes worst-case conditions of minimum size packets and interpacket gap.

**Power budget, fiber quality, number of splices/connections, and installation quality are factors used in determining achievable distances.

The following are LAN Bridge 150 Fiber Optics specifications.

DEBET-RP/RQ-to-DEBET-RP/RQ Links

Size (diameter in microns)	Wavelength (nm)	Loss Budget (dB)	Maximum Distance** (km)	Minimum Attenuation (dB)
50/125	850	8	2.0	N/A
62.5/125	850	12	3.0	1 dB
85/125	850	13	3.0	3 dB
100/140	850	14	2.6	4 dB

DEBET-RP/RQ-to-DEREN-RP/RQ Links

Size (diameter in microns)	Wavelength (nm)	Loss Budget (dB)	Maximum Distance** (km)	Minimum Attenuation (dB)
50/125	850	6.5	1.5	0 dB
62.5/125	850	10.5	1.5	1 dB
85/125	850	11.5	1.5	3 dB
100/140	850	12.5	1.5	4 dB

Microwave Link

Microwave links are implemented using the Digital METROWAVE bridge and the M/A-COM, Inc., MA-23 LAN microwave radio equipment.

- 802.3/Ethernet LAN configuration rules for the METROWAVE bridge are based on the same configuration rules that apply to a pair of fiber optic LAN Bridge 150s: microwave-based METROWAVE bridge uses two LAN Bridge 150s and counts as two bridges in an extended LAN configuration. Digital advises a maximum of seven bridges between the two farthest nodes in an extended LAN when time-critical protocols such as LAT are used.
- Line-of-sight single-link distances up to 7.24 km (4.5 miles) (bridge-to-bridge) are possible. Maximum path length is determined by 802.3/Ethernet propagation delay specifications, designed to detect signal collisions during simultaneous two-way transmissions.
- As with coaxial or fiber optic cable, microwave has an associated latency that can be the same or less than a fully configured maximum-length 802.3/Ethernet LAN. The maximum allowable delay determines the 7.24 km (4.5-mile) distance restriction for METROWAVE. (A standard 802.3/Ethernet LAN has a maximum distance limitation of 2.8 km [1.7 miles] between its two farthest nodes. A single LAN Bridge 150 can join two such maximum LANs.)
- The path length is also a function of the cable distance as measured along the path of the cables between the two links. The cable distance is determined by adding the following distances on both ends of the link:
  - The distance from the LAN Bridge 150 to the microwave adapter, plus
  - The distance from the microwave adapter to the receiver (RX) and transmitter (TX) controllers, plus
  - The distance from the RX/TX controllers to the RF (radio frequency) units.

  The following table lists the resulting point-to-point antenna path given various total (both sides) cabling distances from the LAN bridge to the antenna:

Total Cabling Distance (m/ft)	Antenna Path (km/miles)
30/100	7.7/4.48
60/200	7.1/4.45
180/600	6.9/4.33
300/1,000	6.7/4.21
600/2,000	6.2/3.91

- The microwave transmitter and receiver controllers may be up to 300 meters (1,000 feet) from the antenna.
- A METROWAVE bridge must be located at each end of the microwave link and includes the following:
  - Standard baseband 802.3/Ethernet transceiver
  - LAN Bridge 150
  - BNE3M-20 cable connecting the standard baseband transceiver to the LAN Bridge 150
  - Microwave adapter
  - BNE4D-02 cable connecting the LAN Bridge 150 and microwave adapter

- The METROWAVE bridge is available premounted in 31.5-inch high cabinets, or in noncabinet configurations that make it suitable for rackmounting in Satellite Equipment Room (SER) racks.
- Two METROWAVE bridges connected by a microwave link count as two in the 7-bridge limitation.
- Although it is packaged with a baseband transceiver, the METROWAVE bridge can also be attached to standard 802.3/Ethernet cable using a DELNI, to ThinWire cable using a DESTA, or to broadband cable using a broadband transceiver.

The following figure illustrates the extended baseband LAN configuration and distance guidelines.

Extended Baseband LAN Configuration and Distance Guidelines (Standard, Fiber Optic, and METROWAVE Bridges)

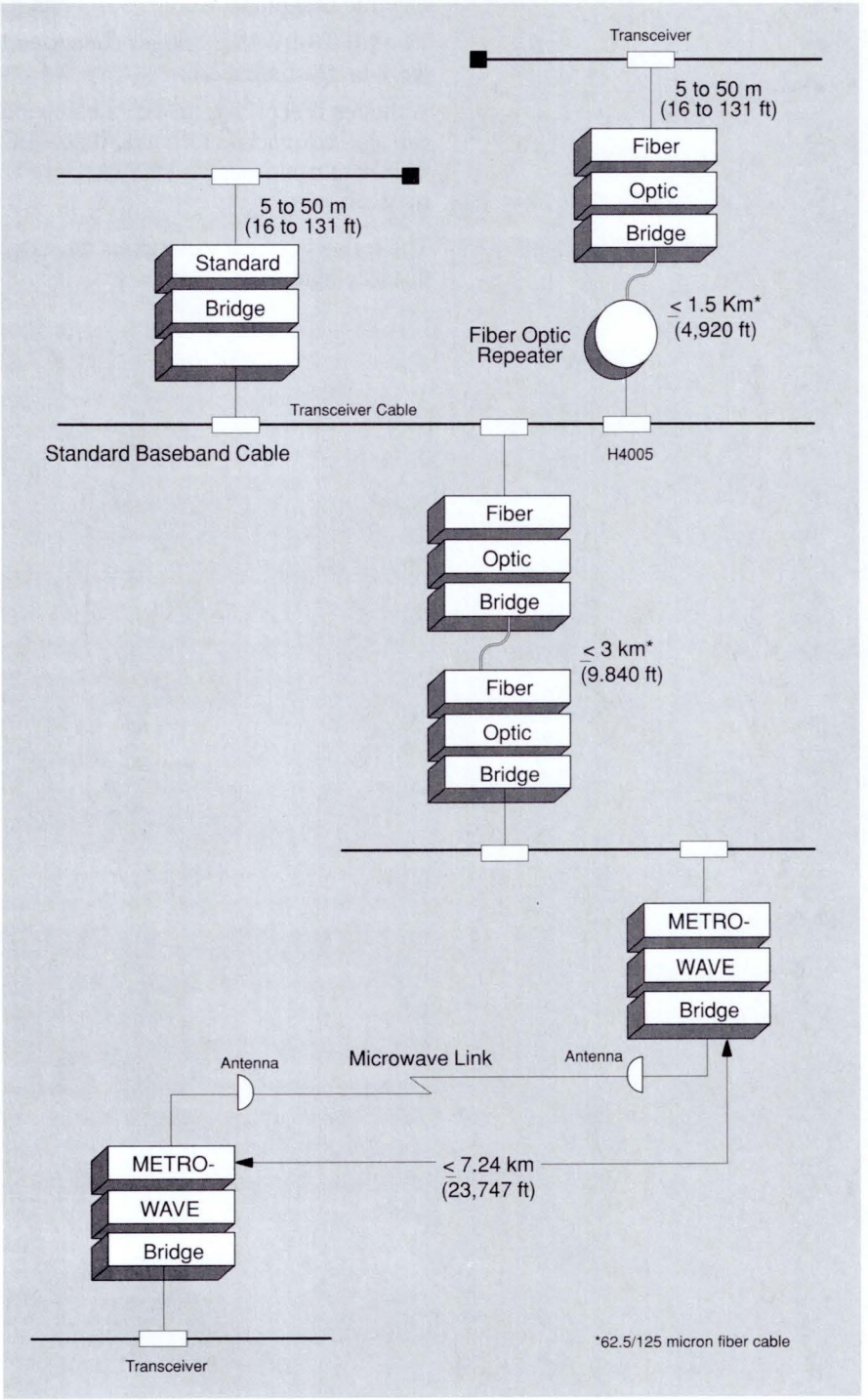

TBG-107-00

Planning a Broadband 802.3/Ethernet LAN

Broadband local area networks use a different cabling system than baseband networks. The network cable, coaxial drop cables, and cable components (amplifiers, splitters, taps, etc.) necessary to construct broadband networks are the same as those used for cable TV.

The planning and installation of a broadband cable system is usually undertaken with the assistance of consultants, installation contractors, and cable TV (CATV) equipment vendors. As part of its Network Integration Services, Digital will serve as the customer's single-point-of-contact for the planning, design, installation, and maintenance of Digital broadband networks.

In preparation for installing broadband networks, Digital certifies the broadband 802.3/Ethernet channel in new and existing broadband cableplants to ensure successful operation of broadband 802.3/Ethernet products. Digital also provides ongoing and remedial maintenance services for these broadband products and other Digital-qualified vendor products. Certification of the broadband 802.3/Ethernet channel in the customer's network is a prerequisite for onsite service contracts for broadband 802.3/Ethernet products.

▲ Refer to Section 9 for more details about Digital's Network Integration Services for broadband local area networks and broadband 802.3/Ethernet products. Contact your Digital Account Manager or Local Customer Services Office for further assistance.

Broadband 802.3/Ethernet Distance Guidelines and Configuration

Broadband 802.3/Ethernet is a rooted branching, nonrooted tree topology with a maximum node separation (the distance between the two farthest systems on the network) of 3.8 km (2.4 miles). Up to 1,023 broadband transceivers can be connected to the broadband network cable, allowing thousands of devices to be connected.

A few simple rules for configuring 802.3/Ethernet on broadband, derived from certain limits imposed on the 802.3/Ethernet physical channel, ensure the optimal performance of the network as follows:

- Distances in broadband 802.3/Ethernet are measured from the location of the broadband frequency translator in single-cable networks. The frequency translator is located at the network head-end.
- The maximum distance from the frequency translator to the farthest broadband transceiver (for example, the maximum radius of the network) is 1.9 km (1.2 miles).
- In dual-cable networks, distances are measured from the point at which the transmit (inbound) cable turns around and becomes the receive (outbound) cable. This is considered the head-end of the dual-cable network.
- The maximum distance from the cable turnaround to the farthest 802.3/Ethernet broadband transceiver is 1.9 km (1.2 miles).
- The maximum station separation of 3.8 km (2.4 miles) is achieved when the broadband cable branches out in opposite directions from the network head-end. Two of these 1.9 km branches add up to 3.8 km of maximum station separation.

Broadband 802.3/Ethernet Distance Guidelines: Single-Cable Networks

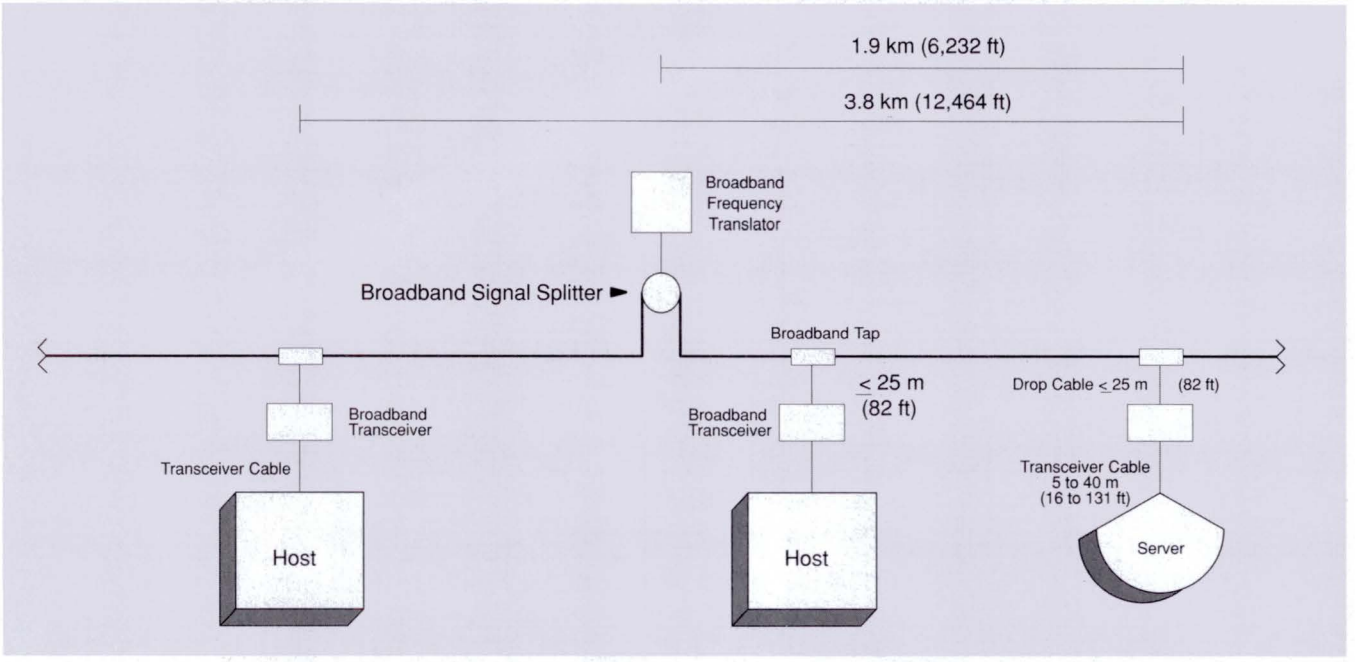

TBG-108-00

Broadband 802.3/Ethernet Distance Guidelines: Dual-Cable Networks

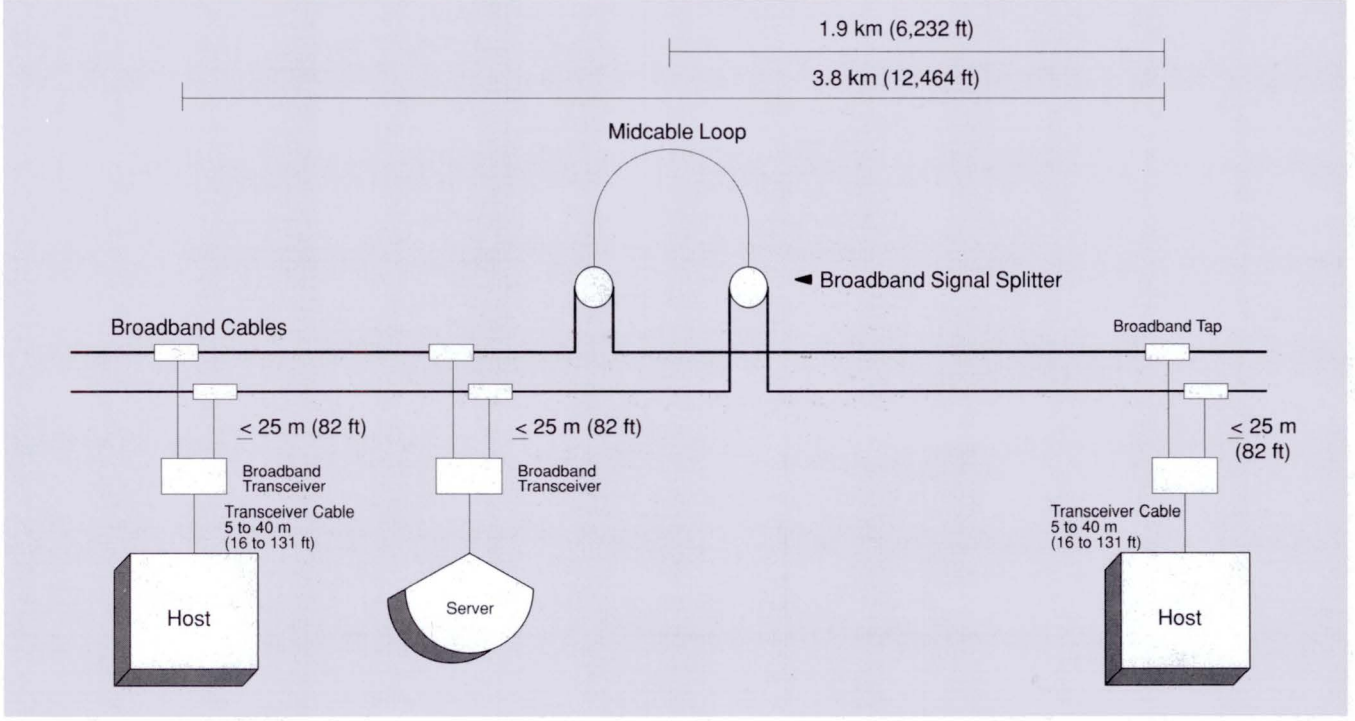

TBG-109-00

Because the broadband cable can branch out in any direction, the network can consist of virtually unlimited numbers of "spokes" from the head-end location. The network cable system in broadband networks is made up of broadband coaxial cable (trunk and drop cables) as well as cable components (amplifiers, splitters, and taps). These elements are the same as those used by the cable TV (CATV) industry. When a broadband network is configured, taps are installed in the cable to allow connection of network devices.

The connection from the broadband tap to the broadband transceiver is made with a broadband drop cable, usually a flexible coaxial cable of RG-6 variety. In single-cable networks, there is one drop cable from the tap to the transceiver. In dual-cable networks, there are two drop cables from the taps to the transceiver, one from a tap on both inbound and outbound cables.

- In both single- and dual-cable broadband networks, the maximum length of drop cable from the broadband tap in the network cable to the transceiver is 25 meters (82 feet). In some networks, the drop cable from the broadband tap leads to a wall outlet. Customers can connect the modem to the wall outlet using the same flexible (RG-6) coaxial drop cable.
- The maximum length of drop cable from broadband tap to wall outlet to broadband transceiver is 25 meters (82 feet). Transceiver cable is used to connect the broadband transceiver to an 802.3/Ethernet communications controller, LAN Bridge 150/200, communications server, or terminal server.
- Transceiver cable length is limited to 50 meters (164 feet), and is measured from the connection at the rear of the broadband transceiver to host system, communications, or terminal server. Note that some devices have internal cabling that may reduce the effective length of the transceiver cable.

Planning an Extended Broadband 802.3/Ethernet LAN

The configuration guidelines for standard broadband 802.3/Ethernet also apply for extended broadband networks, with the following additions:

- For local links, the bridge connects to a broadband transceiver on both sides. Distance from the broadband transceiver to bridge can be a maximum of 50 meters (164 feet), a total of 100 meters (328 feet) between segments. Internal cabling may reduce the effective length of the transceiver cable.
- For fiber optic links, two bridges must be used, with each bridge attached to a broadband transceiver. Maximum distance between bridges is 3 km (1.9 miles) using 62.5/125 micron fiber cable and the DEBET-RH/RJ LAN bridge. A pair of DEBAM-RF/RG bridges can be used to extend this fiber link up to 10 km (6 miles). Distance from the transceiver to the bridge can be a maximum of 50 meters (164 feet). Internal cabling may reduce the effective length of the transceiver cable.

The following figure illustrates the extended broadband LAN configuration and distance guidelines.

Extended Broadband LAN Configuration and Distance Guidelines (Single Cable)

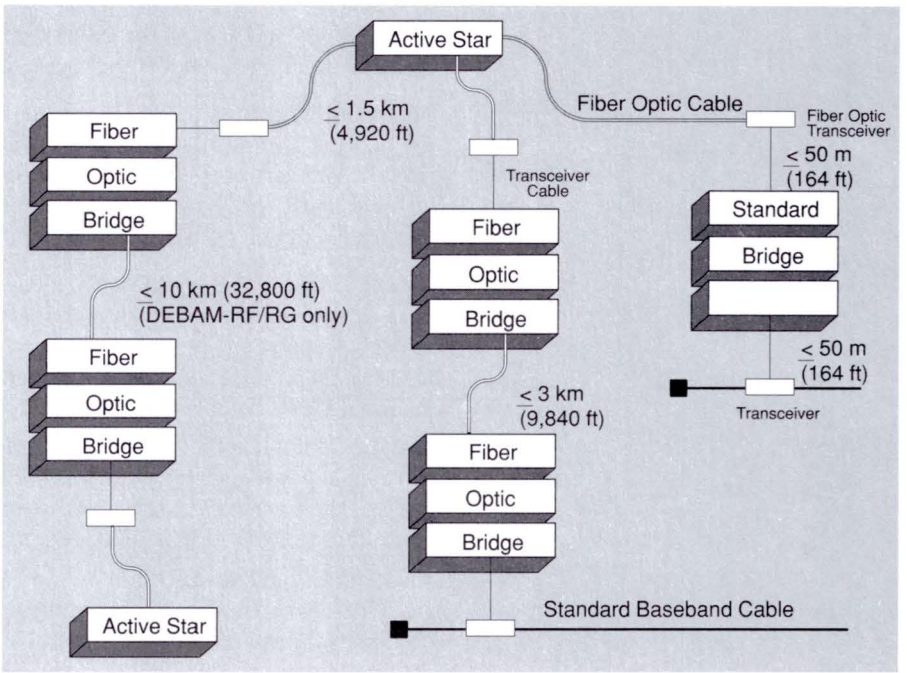

TBG-110-00

Connecting Baseband to Broadband LANs

Baseband and broadband LANs can be connected using the LAN Bridge 150/200. For local links, the bridge connects to a baseband 802.3/Ethernet transceiver on the baseband side of the link using transceiver cable with a maximum length of 50 meters (164 feet). On the broadband side of the link, the bridge connects to a broadband transceiver using transceiver cable with a maximum length of 50 meters (164 feet). Internal cabling may reduce the effective length of the transceiver cable on both sides of the bridge.

For fiber optic links, two bridges must be used. The bridge on the baseband side of the link is connected to a baseband transceiver; the bridge on the broadband side of the link is connected to a broadband transceiver. Maximum distance between bridges is 3 km (1.9 miles) using 62.5/125 micron fiber cable and the DEBET-RH/RJ LAN bridge. Distance from each transceiver to the bridge can be a maximum of 50 meters (164 feet). Internal cabling may reduce the effective length of the transceiver cable.

Baseband-to-Broadband LAN Configuration Guidelines (Standard Bridge)

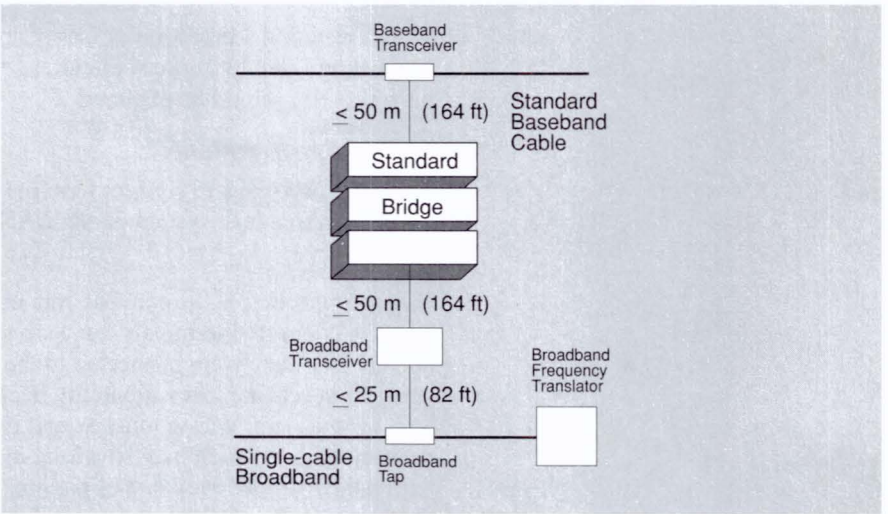

TBG-111-00

Baseband-to-Broadband LAN Configuration Guidelines (Fiber Optic Bridge)

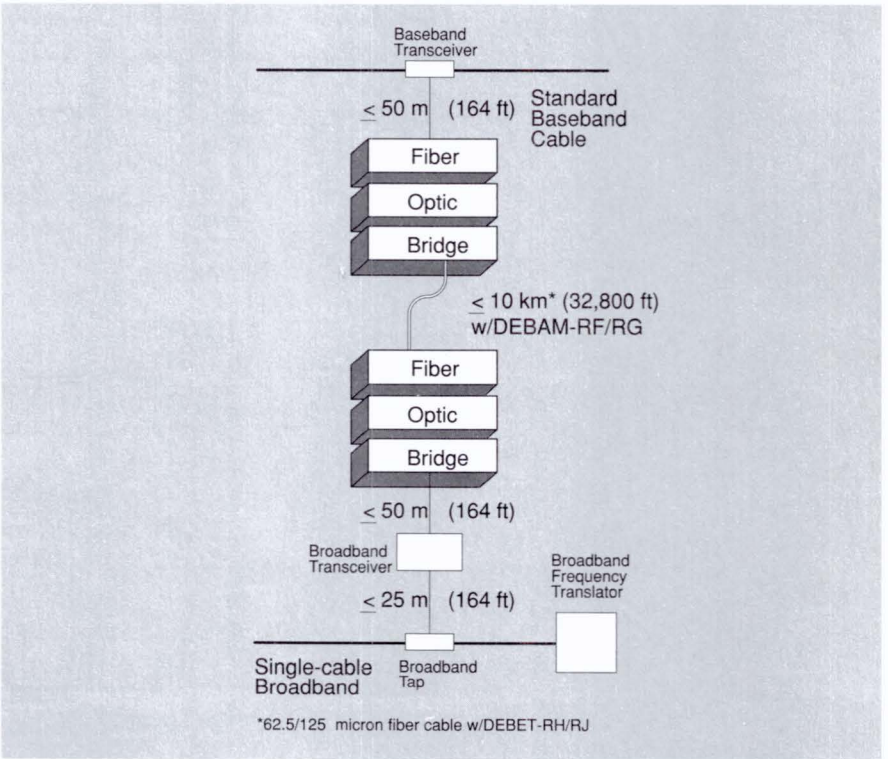

TBG-112-00

Connecting Shared Resources to an 802.3/Ethernet LAN

When planning a baseband or broadband 802.3/Ethernet LAN, alternatives for connecting shared resources (including terminals, host systems, and communications servers) should be explored.

Connecting Terminals

There are two ways to connect terminals to the 802.3/Ethernet LAN: direct connection to a host system on the LAN, and connection to a terminal server on the LAN.

Direct connection is the conventional method of connecting terminals to a host. Directly connected terminals can access any other host system in a network, then operate as if they were connected to the other host system. However, this connection scheme lacks flexibility because terminal controllers must be added to each host system; wiring must extend from each terminal to the directly connected host, which may be a long distance away; and directly connected terminals incur the overhead of passing through their direct host to connect to another host. The following figure illustrates a LAN configuration with directly connected terminals.

802.3/Ethernet LAN with Many Terminals Per Host

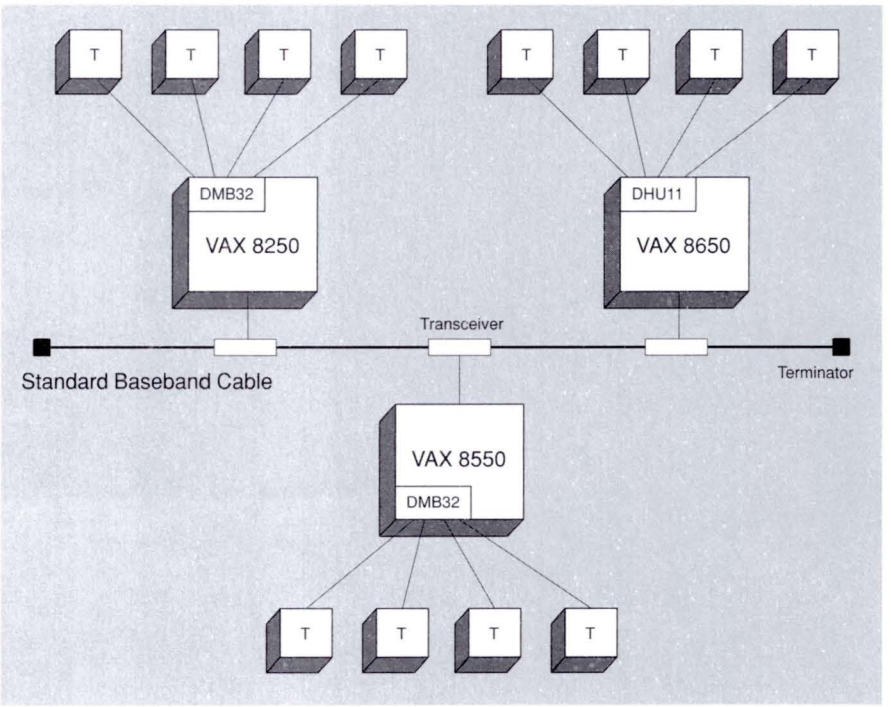

TBG-113-00

Terminal servers allow a more flexible connection scheme than direct connection. A group of terminals connect to a terminal server, which then connects directly to the LAN, allowing the terminals to access any host on the LAN. Printers and modems can also connect to a terminal server, allowing them to be shared by all host systems on the LAN. Terminal servers can be placed close to the users' workplace, thereby reducing the length of wire extending from each terminal.

The following figure shows an 802.3/Ethernet configuration using terminal servers. Compared to the configuration shown in the previous figure, the terminal server configuration reduces the number of controllers for each host, reduces the length of wires extending from terminals, and offers greater flexibility in accessing host systems on the LAN.

802.3/Ethernet LAN Configuration Using Terminal Servers

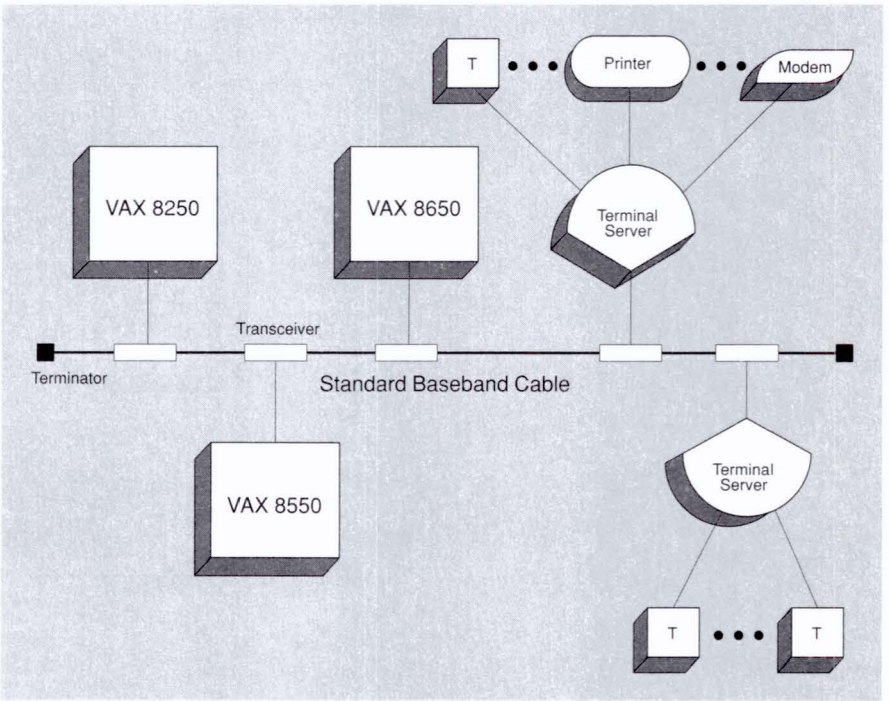

TBG-114–00

Connecting Host Systems

Host systems can be connected to an 802.3/Ethernet LAN in the following ways:

- Directly to standard 802.3/Ethernet cable (using an 802.3/Ethernet transceiver) or to ThinWire. These systems require DECnet Phase IV software and an 802.3/Ethernet communications controller. If the controller connects to standard baseband cable, it can connect to ThinWire by means of a ThinWire Ethernet Station Adapter (DESTA).
- Directly as part of a group of DECnet Phase IV host systems connected to a Local Network Interconnect (DELNI). Each host system requires DECnet Phase IV software and an 802.3/Ethernet communications controller.
- Indirectly by means of a DECnet Phase IV host system that is connected to the 802.3/Ethernet cable. Connected host systems can have DECnet Phase III or Phase IV software. Connections can be hardwired or through modems.
- Indirectly through a DECrouter 2000, DECrouter 200, or DEC X25router 2000. Connected host systems can have DECnet Phase III or Phase IV software. Connections can be hardwired or through modems.

Connecting Host Systems to an 802.3/Ethernet LAN

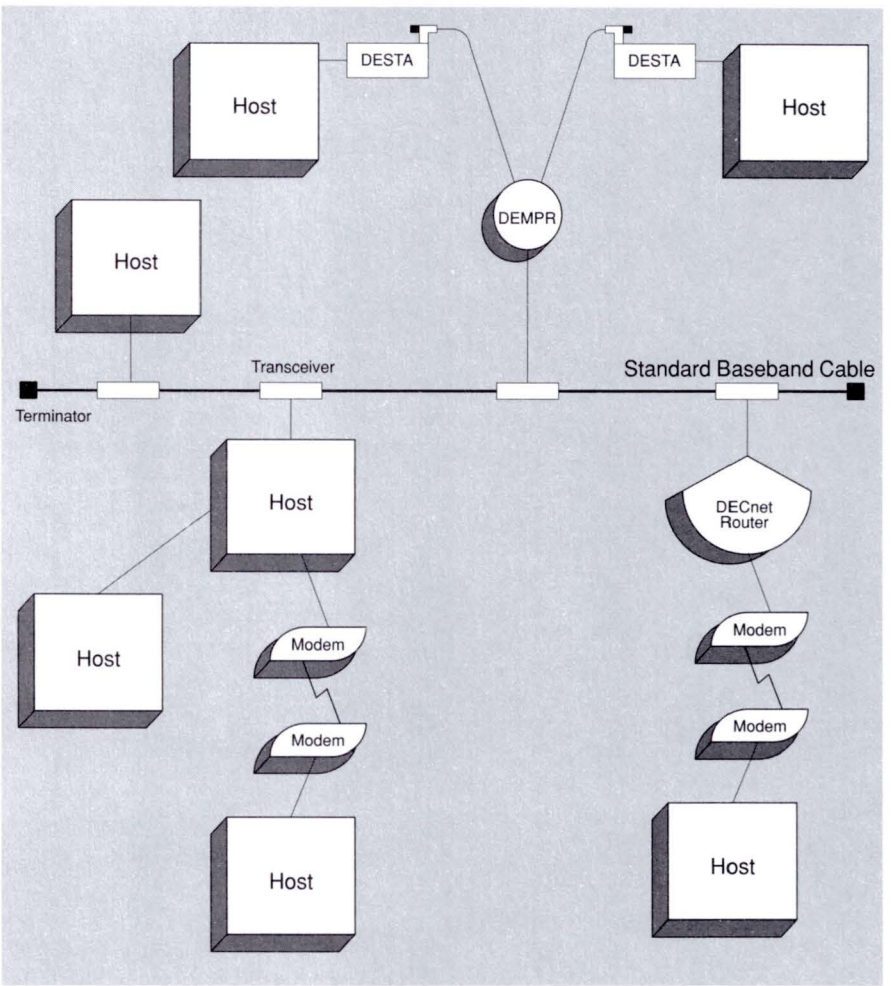

TBG-115-00

DECnet Host System Software

DECnet Phase IV software allows host systems to communicate with up to 64,000 addressable nodes in a local or wide area network environment. An addressable node is either a host system or communications server. ▲ Refer to Section 5 for detailed information on Digital's DECnet software products.

Connecting an 802.3/Ethernet LAN to Remote Networks

Digital offers the following 802.3/Ethernet communications servers to connect Ethernet LANs to remote networks:

- DECnet-to-DECnet routing — The DECrouter 200, DECrouter 2000, or a full-function DECnet node allows host Ethernet systems to communicate with remote DECnet systems or with DECnet systems on other 802.3/Ethernet local area networks by means of point-to-point links.

- DECnet-to-X.25 communications — The DEC X25router 2000, or a full-function DECnet node with a Packetnet software product, allows host systems to communicate with other DECnet systems as well as multivendor systems over an X.25 Packet Switched Data Network. ▲ Refer to Section 5 for more information about Packetnet software products.
- DECnet-to-IBM SNA communications — The DECnet SNA Gateway products allow host systems to communicate with IBM systems in SNA networks.

DECnet-to-DECnet Routing

DECnet-to-DECnet routers provide communications between local and remote DECnet networks. The types of DECnet-to-DECnet routers are full-function host system routers, DECnet router servers, and DECnet gateways.

Host System Routers

A DECnet Phase IV full-function node can manage 802.3/Ethernet routing functions using asynchronous or synchronous lines connected to a communications controller, such as a DMB32 or a DSV11. This may be adequate if there are only one or two connections to remote nodes and if the routing load on the host system is fairly light.

The resources of the host system that functions as a routing node should be carefully analyzed. If the host system has more than two communications controllers, or if it uses a significant amount of CPU processing time for routing, a DECrouter 2000 or DECrouter 200 should be considered. These servers are dedicated to routing functions, while full-function nodes must also run applications. In addition, the physical line interfaces for the DECnet Router Server or DECrouter 200 are much less expensive than those provided by communications controllers.

DECrouter 2000

The DECrouter 2000 performs DECnet routing functions between Phase IV nodes on an 802.3/Ethernet LAN and remote DECnet nodes, and provides connections between independent 802.3/Ethernet networks.

For routing purposes, Phase IV DECnet networks consist of a number of linked areas. Each area is not limited to a specific geographic region, but is often localized, such as a LAN in a building. (Here LAN refers to any local area network that conforms to the Ethernet, IEEE 802.3, or the ISO 8802/3 standards.)

Packet routing is handled by specified routing nodes, which may have to do this task in addition to providing services to users. Routing works on two levels:

- Level 1 — Among nodes within an area (called intra-area routing).
- Level 2 — From one area to another (called inter-area routing). The DECrouter 2000 is a dedicated routing system that can act as a Level 1 and/or Level 2 router. The system routes information over one LAN circuit and up to four synchronous Digital Data Communication Message Protocol (DDCMP) circuits. This gives other DECnet nodes on the LAN access to remote nodes, and also relieves them of the routing overhead.

An example application for the DECrouter 2000 might be as a Level 2 router for a LAN whose nodes are in a single DECnet area, connected to two remote nodes in the same DECnet area, and two other nodes in other areas. In this case it would act as both a Level 1 and Level 2 DECnet router.

Routing Capabilities

- Level 1 and/or Level 2 Phase IV DECnet routing.
- Ability to route messages between 63 areas, each with up to 1,023 nodes, the maximum permitted by the architecture. (Satisfactory operation in large networks requires proper network planning.)
- Adaptive routing over the synchronous links and to/from the LAN.
- Ability to communicate with remote Phase III nodes in the same DECnet area.
- Path splitting where there are two or more equal-cost paths between the DECrouter 2000 and the destination DECnet node. For this feature, all the destination nodes on the network must support out-of-order packet caching.

Synchronous Line Capabilities

- Data speeds of up to 256 Kb/s.
- EIA-232-C, EIA-422, EIA-423, V.24, V.35 and X.21 electrical interfaces: X.21 is supported in leased-line mode only.
- Full modem control on all synchronous lines.

DDCMP Capabilities

- Communicates with all supported synchronous Digital DDCMP products, excluding the DMC11.
- Ability to work on point-to-point or multipoint links. However, on DDCMP multipoint links, the DECrouter 2000 can act only as a tributary.
- Full- or half-duplex communications.

802.3/Ethernet LAN Configuration Using a DECrouter 2000

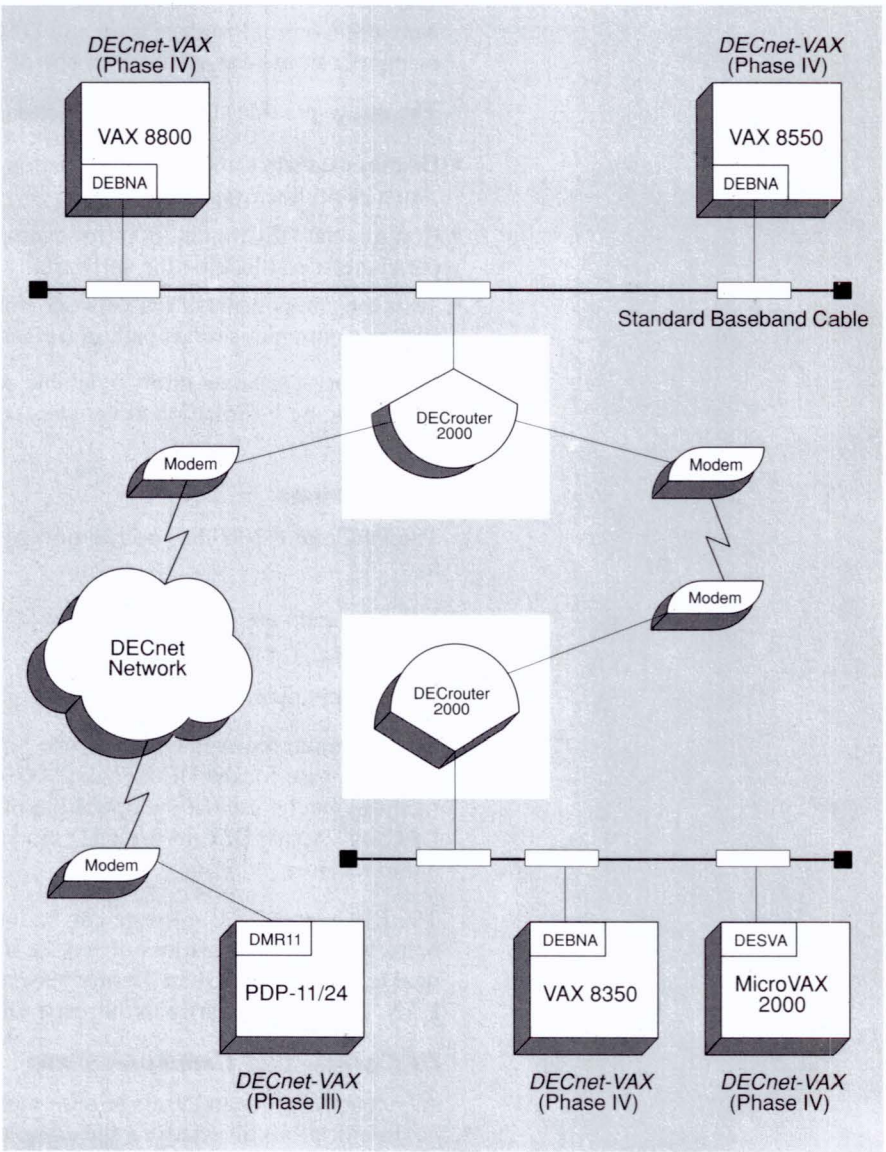

TBG-119-00

Network and Configuration Management Capabilities

- Configuration using a downline loaded image and a configuration utility.
- Remote management from any suitable DECnet node using the DECnet Network Control Program (NCP).
- Remote problem diagnosis (for example, using the TRACE tool).
- Automatic attempt to dump and reload following a system failure.
- Event logging to any Phase IV DECnet node.
- Dynamic reconfiguration while the system is running.

Network Management

The network manager controls the DECrouter 2000 by using the DECnet Network Control Program from any DECnet Phase IV node. For example, the manager can use the utility from one of the systems on the LAN.

The utility provides three basic functions:

- Displays statistics and error information for the DECrouter 2000 (for example, statistics on line usage or errors).
- Controls the DECrouter 2000 (for example, starting and stopping lines, setting parameters, and loading the software).
- Tests the components of the network (for example, loopback messages of all or part of a communications path to isolate a defective component).

In addition, a separate utility available on VMS load hosts assists problem-solving by tracing information at various stages in its path through the DECrouter 2000.

Host Systems

The DECrouter 2000 has no file storage of its own, and so relies on host systems to:

- Load the software
- Log events
- Receive any memory dumps

The minimum requirement is for one host to load the DEC MicroServer, the hardware base for the DECrouter 2000. Event-logging and dump-reception facilities can be used at the discretion of the customer. Only a DECnet Phase IV DECnet-VAX or DECnet-ULTRIX node on the same LAN can be a load host or dump receiver.

The DECrouter 2000 software can be installed on a number of load hosts. This helps to protect against loss of service if a single load host is unavailable or unable to load the system for any reason. Each load host must be on the same LAN, but not necessarily in the same DECnet area as the DECrouter 2000.

DECnet-to-X.25 Communications

As networks grow and users require more network functions, nodes, and communications alternatives, the complexity of the network increases. Digital's communications over Packet Switched Data Networks (PSDNs) can be a cost-effective alternative for customers who want to transmit a low volume of data remotely. Public PSDNs charge primarily on the amount of data transmitted, and to a lesser extent, if at all, on distance and time factors.

If a customer requires only short, low-speed data transmissions, a dialup line might be cost-effective because it avoids the PSDN connection charge. If high-volume continuous data transmission is required, the customer will want to avoid the PSDNs "data-sent" charge, making a leased line more appropriate. Somewhere in the middle (medium data rates and volume), X.25 PSDNs are cost-effective. Because most X.25 networks charge by the amount of data sent, customers may want to mix capabilities (leased line, dialup, and packet-switched), depending on the traffic patterns and line costs.

The CCITT X.25 Recommendations defines the network protocols for communications among multivendor systems over X.25 Packet Switched Data Networks. There are two ways of connecting 802.3/Ethernet nodes to an X.25 network: host-based system connections or the DEC X25router 2000.

Host-Based System Connections to X.25 Networks

Individual VAX or RSX host systems can connect to an X.25 network using the VAX P.S.I. or RSX-11 P.S.I. products. During installation, customers can choose to allow the VAX P.S.I. system to act as a gateway to a PSDN. Other VAX systems in the DECnet network need only install VAX P.S.I. Access to take advantage of the facilities available through or from the X.25 PSDN. ▲ Refer to Section 5, "Packetnet Communications Software," for more detailed information.

DEC X25router 2000

The DEC X25router 2000 is an addressable node on the network available for access by any host node on the network. The DEC X25router 2000 connects host nodes to other DECnet nodes in an X.25 network using the Data Link Mapping (DLM) capability of the gateway software. ▲ Refer to Section 2, "802.3/Ethernet Communications Routers, Bridges, and X.25 Gateway Services," for a description of the DEC X25router 2000.

In addition to acting as a Level 1 (local) router and supporting limited numbers of DDCMP synchronous lines, the DEC X25router 2000 gives VAX P.S.I. Access systems access to all facilities offered by the connected X.25 network.

Most often the design of geographically dispersed networks is influenced by the expense of transferring data over telecommunications facilities owned by common carriers. Network implementations use either leased lines for high-volume, continuous data transfer, or PSDN communications for low-to-medium-volume data transfer. For customers with one or both of these requirements, the DEC X25router 2000 offers a unique solution. Because the DEC X25router 2000 supports both X.25 and DDCMP (leased) lines, it offers flexible configurations.

The DEC X25router 2000 allows users to make traditional wide area network DECnet connection using DDCMP to DECnet nodes on an 802.3/Ethernet local area network, and to DECnet nodes connected to an X.25 network, as illustrated in the following figure.

DEC X25router 2000 Configuration (DECnet-to-DECnet)

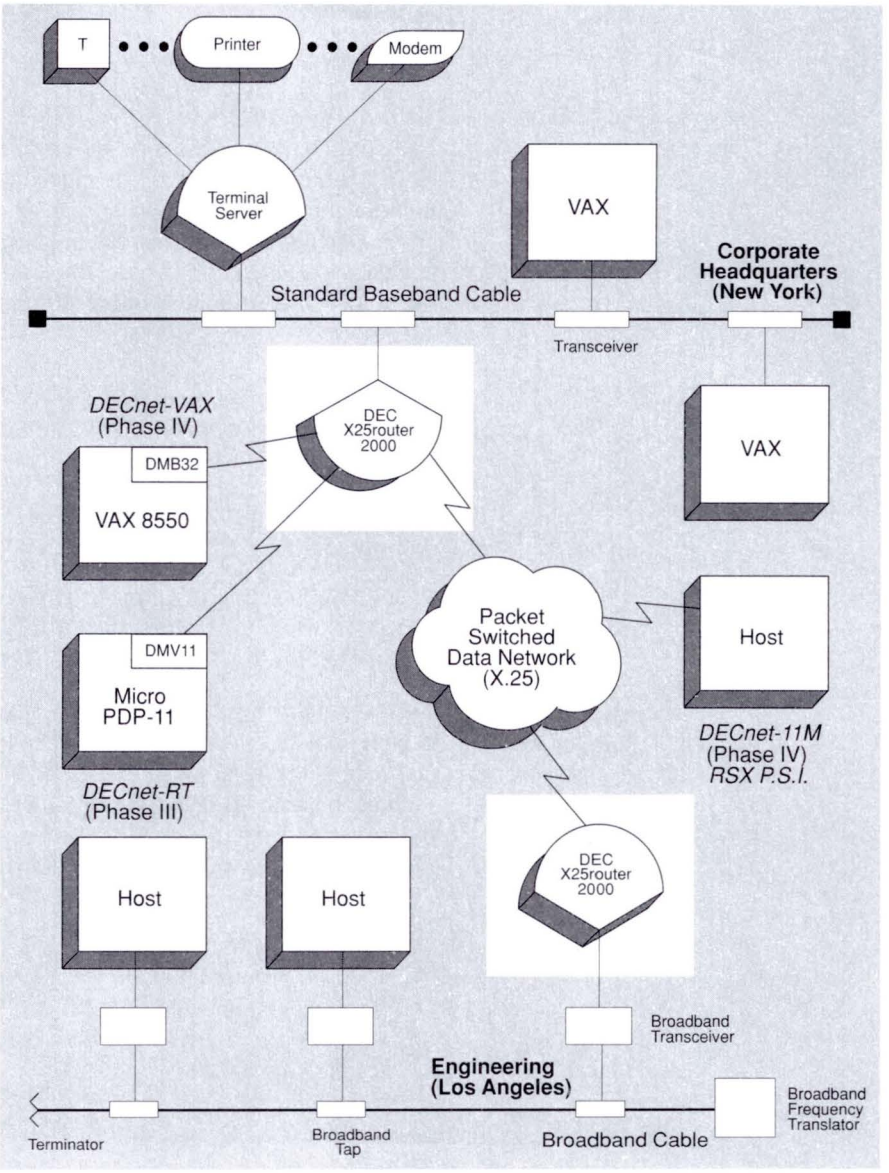

TBG-120-00

A VAX host system that runs the VMS operating system and is on the local area network must have a copy of the basic DEC X25router 2000 software. This host system downline loads the software into the DEC X25router 2000. Then the DEC X25router 2000 is started and DECnet-to-DECnet communications are available to all other host systems on the LAN.

Digital to Multivendor Communications over X.25 Networks

▲ Refer to Section 5, "Packetnet Communications Software," for a description of Digital's P.S.I. and P.S.I. Access products, which are used with the DEC X25router 2000 to provide X.25 and X.29 communications capabilities. Section 5 also contains a table indicating the relative advantages and disadvantages of gateway versus direct X.25 connections, and the alternative use of VAX P.S.I. in multihost mode.

DECnet to IBM SNA Communications

The DECnet SNA Gateway products link Digital VAX nodes, that run the VMS operating system and are within a DECnet network to an IBM SNA network. The gateway, illustrated in the following figure, connects to the standard 802.3/Ethernet cable. A Phase IV VAX/VMS host is needed to downline load software to the DECnet SNA Gateway. The DECnet SNA Gateway is accessible directly by any Phase IV VMS host connected directly to the local area network or any Phase III VMS host connected by means of a DECrouter or DECnet routing system with DECnet SNA Gateway Access software.

DECnet SNA Gateway Configuration

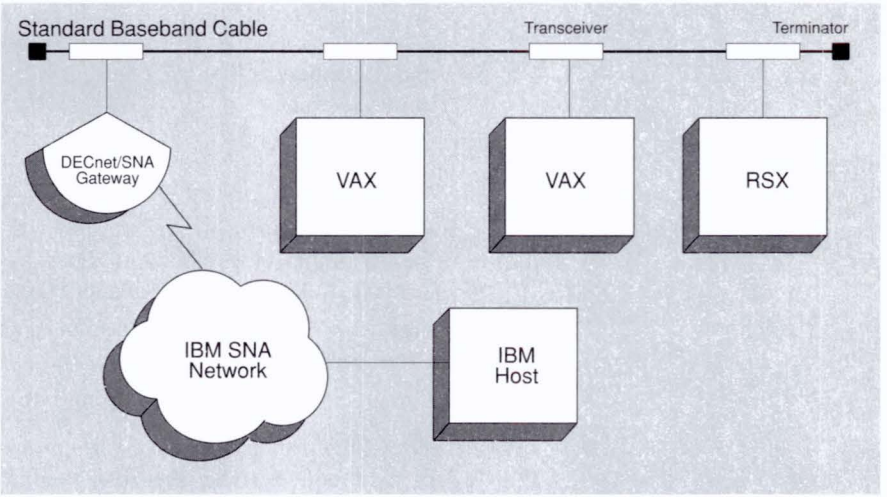

TBG-121-00

Each DECnet SNA Gateway-ST can handle up to four lines to remote SNA networks. A DECnet SNA Gateway-CT provides one link directly to an IBM channel. In network applications with extremely heavy traffic between the DECnet and SNA environments, more than one DECnet SNA Gateway may be necessary.

DECnet SNA Access Routines and Programming Interfaces

Each VAX host system that runs the VMS operating system and that accesses the IBM systems in the SNA network needs the appropriate DECnet SNA Access Routine or Programming Interface software. ▲ Refer to Section 5, "Digital to IBM Communications Software," for more information about DECnet SNA Access Routines and Programming Interfaces.

The ANSI FDDI standard calls out two types of nodes: stations and concentrators. Station types are further divided by their respective connections, or attachments, to the fiber network. Dual attachment stations (DAS) are connected to both the primary (active) and secondary (backup) rings. Single attachment stations (SAS) are connected only to the primary ring. Concentrators can be constructed as either single attachment concentrators (SAC) or dual attachment concentrators (DAC).

Digital accommodates both DAS and SAS devices in the FDDI network. DAS end-user workstations or systems, when they fail or are powered off, may induce disruption and global network reconfiguration, however.

Digital suggests that only network backbone component devices (concentrators and bridges) be connected as DAS devices. End user stations (computers and workstations) should only be connected as SAS devices. The use of SAS devices connected to concentrators facilitates flexible network design and promotes more stable, manageable network operation. Digital's configuration guidelines do accommodate DAS devices, such as third-party workstations with DAS adapters, by providing SAS interconnection to Digital concentrators. This affords the least disruptive operating environment for all participating FDDI devices.

To properly configure your FDDI network, you need to be familiar with the four device port types: A, B, M, and S. These port types are defined in the list below and illustrated in the *DECconcentrator 500 and Station Port Connections* figure in this section.

- Port A — Connects to the incoming active ring and outgoing backup ring of the FDDI dual ring. This port is part of a DAC or a DAS device.
- Port B — Connects to the outgoing active ring and the incoming backup ring of the FDDI dual ring. This port is part of a DAC or DAS. This port is also used to connect the DAS to the concentrator.
- Port M — Connects a concentrator to an SAS, DAS, or another concentrator in a tree configuration. This port is only implemented in the concentrator.
- Port S — Connects an SAS or an SAC to a concentrator.

The FDDI products all have certain distance requirements depending on the media type used. The fiber distances are in compliance with the ANSI FDDI specifications.

FDDI Product Distances and Media Supported

	Media Type			
FDDI Product	**SMF**	**ANSI Multimode**	**Low Power Optics**	**ThinWire or STP**
DECconcentrator 500	40 km	2 km	1 km	100 m
DECbridge 5xx, 6xx	40 km	2 km	N/A	N/A
DEC FDDIcontroller 400	N/A	2 km	N/A	N/A
DEC FDDIcontroller 700	N/A	2 km	N/A	N/A
DEC FDDIcontroller 700-C	N/A	N/A	N/A	100 m
DEC FDDIcontroller/EISA	N/A	2 km	N/A	N/A

N/A = Not available

Dual Homing

Dual homing uses backup links to enhance fault tolerance in a tree topology. One link is called the primary link, and the other is the backup link. Both DECconcentrators and DAS bridges may be used in a dual homing configuration.

The following figure shows a dual homed topology using concentrators and a DAS bridge. If either Concentrator 3 or the primary link to the DAS bridge fails, the backup link to the DAS bridge, through Concentrator 2 is activated. This ensures that the devices connected via the DAS bridge will have uninterrupted service. Activation of the individual links follows the FDDI connection rules.

Dual Homing Topology Using Concentrators and a DAS Bridge

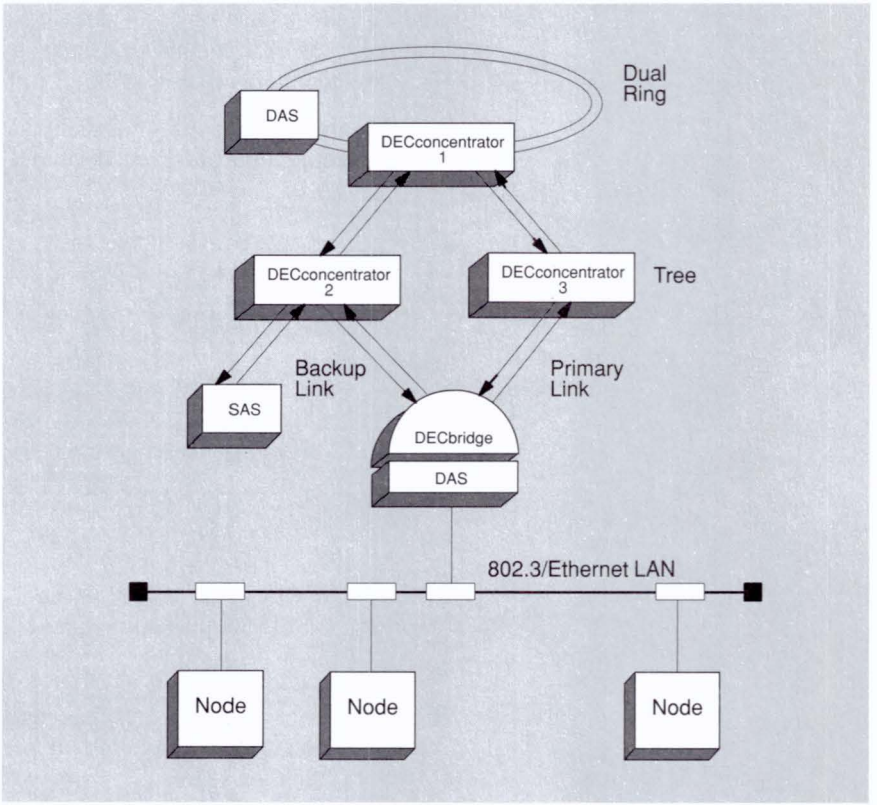

TBG-161–00

Optical Bypass Relay

The Optical Bypass Relay (OBR) maintains connectivity of the FDDI ring if there is no power or if a fault condition occurs in the concentrator or DAS bridge. The bypass relay allows the light to bypass the optical transmitter and receiver in the off-line device, thus maintaining the operation of the FDDI dual ring.

Use of optical bypass relays may allow the maximum distance or maximum loss between stations to become greater than the system specification. When operating in bypass mode, optical bypass relays serially link two cableplant segments and add loss.

Each sequential relay adds another cableplant segment. A loss is attributed to the segment and to the addition of the relay. This limits the number of serially connected relays in the ring.

The total loss of the serially linked cableplant must not exceed 11 dB. The total length of the serially linked cableplant must not exceed 2 km (1.2 mi). Refer to the section entitled "Optical Bypass Link Loss" for information about how to determine the allowable link loss per cableplant segment.

Other considerations when using optical bypass relays are listed below:

- Bypass relays do not amplify or restore the bit stream.
- Bypass relays can be unreliable because they are mechanical devices.
- Bypass relay technology provides for only a few consecutively bypassed stations. The exact number depends on the configuration and the station. In a building, the number ranges from zero to three.

Refer to the optical bypass connector signal information in the following figure when selecting optical bypass devices.

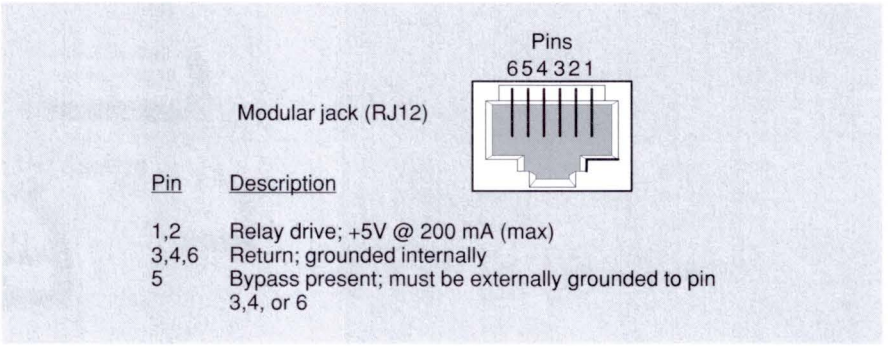

TBG-175-00

Refer to the DECconcentrator 500 and DECbridge 500/600 series descriptions in Section 2 of this Supplement for more information.

Optical Bypass Link Loss

Installed optical bypass relays operating in bypass mode introduce additional loss to the cableplant. Use the following procedure to determine the allowable link loss per cableplant segment.

1. Obtain from the vendor the worst-case loss (Lwc) for the optical bypass relay when the device is in bypass mode.
2. Multiply the number of serially linked optical bypass relays by the known Lwc.
3. Subtract the calculated Lwc from the available 11-dB link-loss budget.
4. Divide the result by the number of intervening cableplant segments.

The result equals the allowable link loss per cableplant segment.

The following table shows the formula to determine allowable link loss as a function of the number of bypass relays.

Number of Serially Bypassed Stations	*Allowable Link Loss Calculation*
1	(11 dB — Lwc)/2 = link loss
2	(11 dB — (2 × Lwc))/3 = link loss
3	(11 dB — (3 × Lwc))/4 = link loss
4	(11 dB — (4 × Lwc))/5 = link loss

If the exact link loss is known for the cable segments:

1. Calculate the total Lwc for the concatenated cableplant.
2. Add the known link loss for each segment to the total Lwc.

The link-loss budget for the concatenated cableplant must be less than or equal to the available link-loss budget of 11 dB.

Configuration Guidelines

The following section provides the FDDI configuration guidelines needed to link Digital's family of FDDI products to 802.3/Ethernet and FDDI networks.

The guidelines are divided into five groups:

- Concentrator-to-FDDI network
- Bridge-to-FDDI network
- Bridge-to-concentrator FDDI side of the bridge (fiber optic interface)
- Bridge-to-802.3/Ethernet side of the bridge (AUI and ThinWire interfaces)
- Cabling requirements

DECconcentrator 500

The DECconcentrator 500 is a DAC device. It can be connected to either the FDDI dual ring or to another FDDI concentrator in an FDDI tree topology.

- An S-port is a port on an FDDI device that is the end station of the tree topology. Therefore, an S-port can be connected to an A-, B-, or M-port.
- When the DECconcentrator 500 is connected to the FDDI dual ring, Port A should be connected to Port B of another DAC or to a DAS. Port B should be connected to Port A of a DAC or DAS.
- When the DECconcentrator 500 is connected to another FDDI concentrator in an FDDI tree topology, Port B is connected to one of the M-ports of a concentrator at a higher level in the tree.
- A DAS can be connected to a DAC in the FDDI LAN as described above, or to a DAC in an FDDI tree by connecting its B-port to an M-port of the concentrator.

- Port A cannot be connected to Port A of another DAC or to a DAS.
- Port B cannot be connected to Port B of another DAC or to a DAS.
- Port M cannot be connected to Port M of another concentrator in an FDDI tree topology.
- Port A cannot be connected to Port M of another concentrator if Port B is connected to Port A or Port S on another station.

DECconcentrator 500 and Station Port Connections

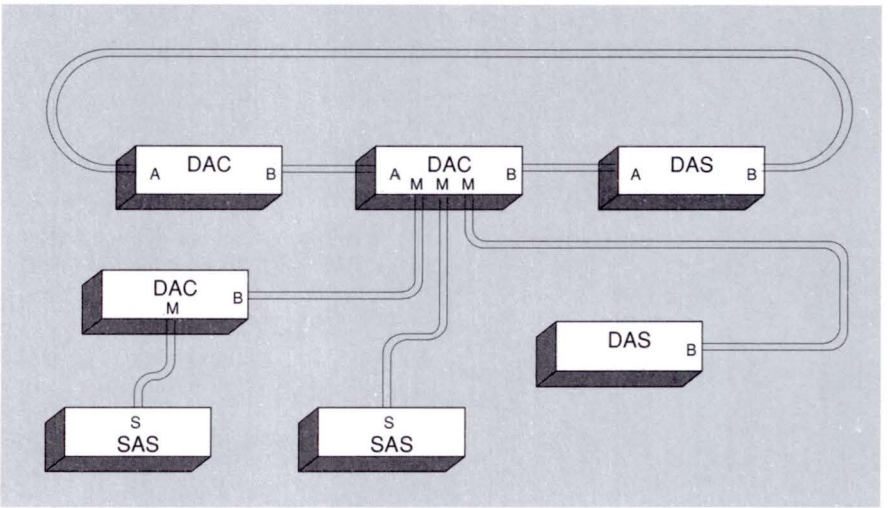

TBG-122-00

The DECconcentrator 500 is an integral part of the following topologies:

- A backbone cabling system
- A dedicated high-speed LAN environment, such as workgroup LANs connecting high-performance workstations, systems and servers, which are then connected to a backbone system
- A standalone workgroup

Dual Homing Redundancy Capability

The DECconcentrator 500 and DAS DECbridges support dual homing.

Dual homing is a mechanism that enhances fault tolerance of an FDDI network in a tree configuration. Dual homing refers to a tree configuration in which a lower level DAS device has two connections to one or two concentrators at a higher level of the tree. Dual homing enables redundant device connections, thus reducing possibilities for a single point of failure in specific topologies.

The following figure shows dual homing with concentrators.

Dual Homing for Two Concentrators

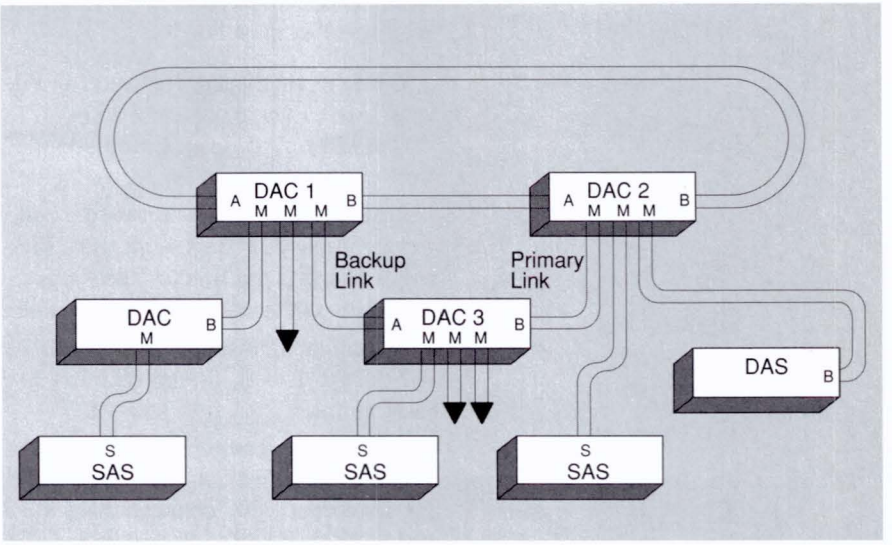

TBG-150-01

- Port A of Concentrator 3 is connected to one of the M-ports of Concentrator 1. Per Physical Connection Management part of the FDDI standard, this is a standby link.
- Port B of Concentrator 3 is connected to one of the M-ports of Concentrator 2. Per the Physical Connection Management part of the FDDI standard, this is an active link.
- Concentrator 3 is connected to the FDDI dual ring by means of Concentrator 2. If the active link fails or if Concentrator 2 fails, the standby link automatically activates. In this case, Concentrator 3 is still connected to the FDDI dual ring; however, the connection is now by means of Concentrator 1 instead of Concentrator 2.

DECconcentrator 500 in a Standalone Workgroup Topology

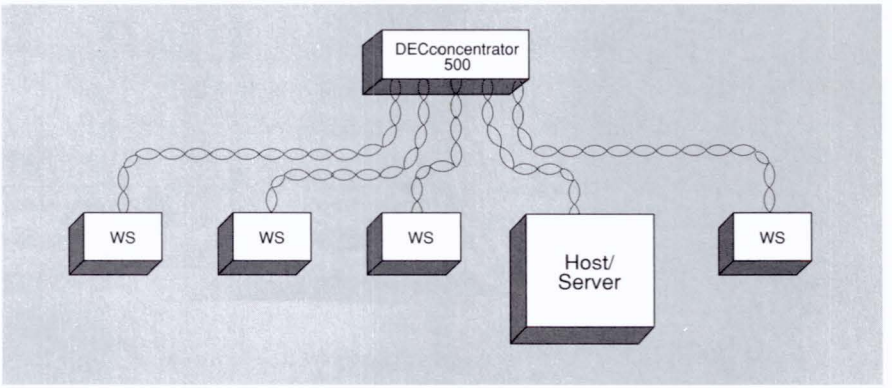

TBG-123-00

Concentrator-to-FDDI Connection Requirements

When connecting the DECconcentrator 500 to an FDDI network, the following requirements must be met:

- The maximum distance between any two adjacent concentrators in a dual ring or in a tree must not exceed 2 km (1.2 miles) if using multimode fiber optics, or 40 km (25 miles) if using single-mode fiber. ▲ Refer to the "FDDI Products Distances and Media Supported" table at the beginning of this section.
- The maximum distance between a concentrator and any other FDDI-compliant device in the dual ring of the tree configuration must not exceed 2 km (1.2 miles) if using multimode fiber optics. ▲ Refer to the "FDDI Products Distances and Media Supported" table at the beginning of this section.
- The cumulative distances between FDDI stations cannot exceed 100 km (62 miles). The maximum fiber extent (token path) in an FDDI LAN is 200 km (124 miles).
- The maximum number of concentrators in a dual ring of trees structure is limited by the number of devices that can connect to the LAN. ANSI specifies no more than 1,000 connections (500 devices) on one FDDI LAN. Each concentrator counts as one device.

DECconcentrators in a Dual Ring of Trees

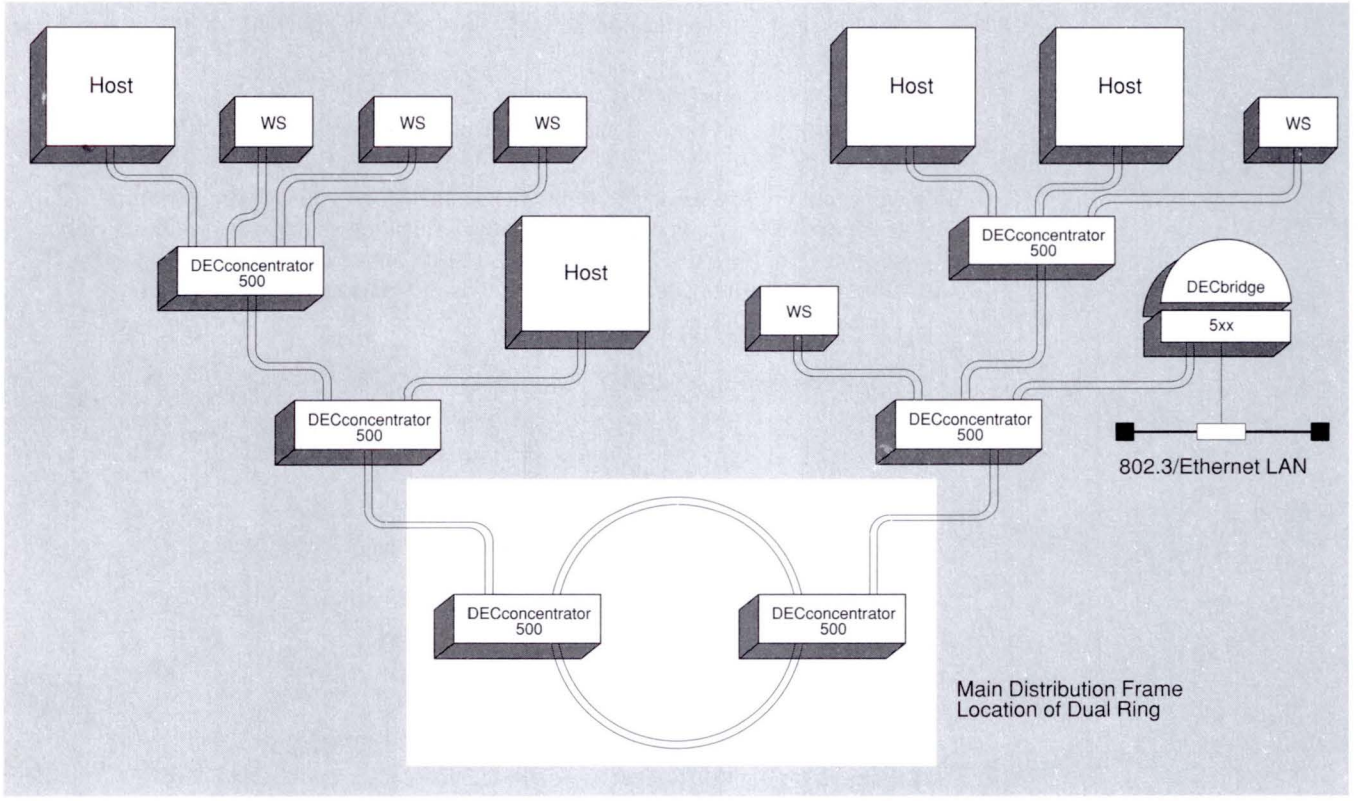

TBG-124-00

DECbridge Family

The DECbridge 500 and 600 series are standards-compliant LAN devices that provide the interconnection between a high-speed FDDI network backbone and one or more 802.3/Ethernet LANs. The DECbridge 500 series provides the connection from FDDI to one 802.3/Ethernet LAN; the DECbridge 600 series provides the connection from FDDI to three 802.3/Ethernet LANs.

General Guidelines

- Ensure that the extended LANs connected to the IEEE 802.3/Ethernet ports are properly configured for IEEE 802.1d and LAN Bridge 100 spanning tree loop detection modes. This is especially important in networks that contain bridges that are not manufactured by Digital. ▲ For further information, refer to the *Bridge and Extended LAN Reference* guide.
- Bridges are used to interconnect single-LAN segments into an extended LAN. Each port on the bridge starts a new single-LAN segment. The extended LAN can have a maximum of seven bridges in the data path between any two stations.

Bridge-to-FDDI Guidelines

- An SAS bridge is connected to the FDDI dual ring network through a concentrator. The FDDI board of an SAS bridge is an S-port. Although an S-port can be legally connected to any type of FDDI port (A, B, M, or S), it is recommended that Port 1 be connected to an M-port on the DECconcentrator 500.
- The FDDI board of a DAS bridge has an A- and a B-connector that allow the bridge to be connected directly to the FDDI network. Port A connects to the incoming Primary ring and the outgoing Secondary ring of the FDDI dual ring. Port B connects to the outgoing Primary ring and the incoming Secondary ring of the FDDI dual ring.
- The FDDI board of a DAS bridge can also be used in a dual homing configuration where the A- and B-ports are connected to M-ports of other concentrators. Refer to the *Dual Homing Topology Using Concentrators and a DAS Bridge* figure earlier in this appendix. The B-port will be the primary link for the FDDI network while the A-port will act as the backup link.
- Bridge-to-FDDI connections can be either multimode or single-mode, depending on the model. The maximum cable length for multimode connections is 2 km (1.2 miles). The maximum cable length for single-mode connections is 40 km (25 miles). If the connection is made through a patch panel, the total cable length must not exceed this maximum length.

▲ For further information and guidelines on fiber optic cableplants, refer to the *DECconnect System Fiber Optic Installation* guide and the *DECconnect System Fiber Optic Planning and Configuration* guide.

DECbridges in an FDDI-to-802.3/Ethernet Thick Wire Topology

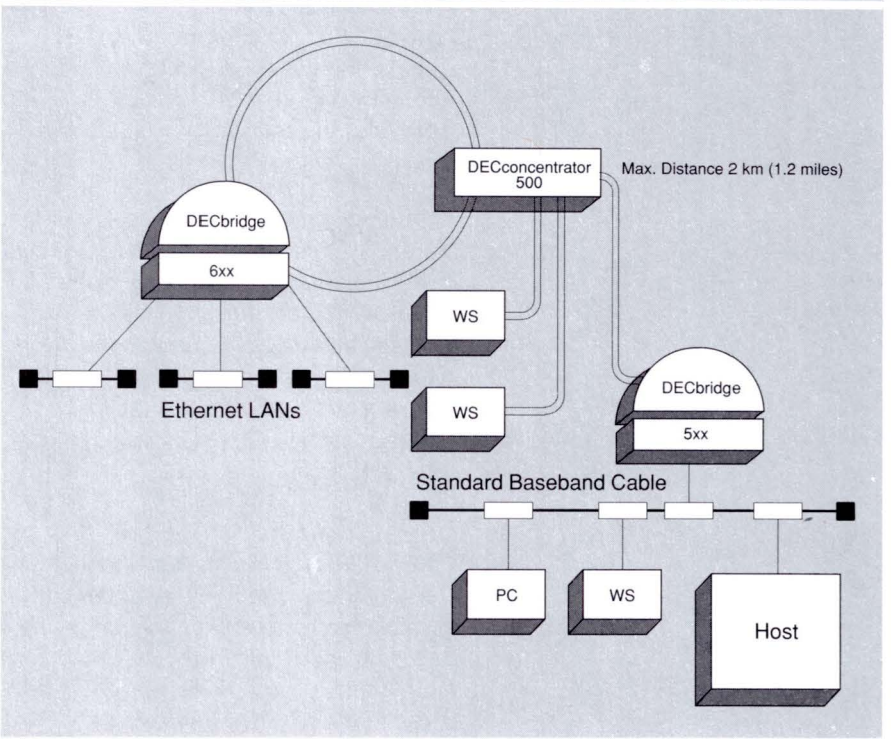

TBG-125-00

Bridge-to-802.3/Ethernet Guidelines

DECbridge 5xx units can be connected to an IEEE 802.3/Ethernet network through either an integral AUI interface or an integral ThinWire interface. DECbridge 6xx units can be connected to three individual IEEE 802.3/Ethernet network segments through three separate integral AUI interfaces.

AUI Interface

The following rules and guidelines are for connecting the bridge to an IEEE 802.3/Ethernet network via the AUI interface.

- If the bridge connects to an IEEE 802.3 transceiver such as the H4005 or to a DESTA, the transceiver cable must be an IEEE 802.3-compliant transceiver cable (BNE3H/K/L/M or BNE4C/D).
- If the bridge connects to a non-IEEE 802.3 transceiver such as the H4000, the transceiver cable can be either Ethernet or IEEE 802.3 compliant.
- IEEE 802.3 transceiver cables and Ethernet transceiver cables cannot be interconnected.
- Maximum length of the transceiver cable cannot exceed 50 meters (164 feet). This maximum length can be decreased due to the *internal cabling equivalency* of a device (such as a DELNI) that is connected between the bridge and the transceiver, or due to the use of an office transceiver cable. The cabling equivalency of such a device must be subtracted from the 50-meter (164-foot) maximum. Note that the DECbridge 500 and 600 series do not have an internal cabling equivalency.

Cabling equivalency is a measure of the internal timing delay of a device expressed in meters of transceiver cable.

For example:

- If a device has a 5-meter (16.4-foot) cabling equivalency, then its maximum allowable transceiver cable length is 50 meters (164 feet) minus 5 meters (16.4 feet) or 45 meters (148 feet).
- Office transceiver cable (BNE4x-xx), due to its smaller diameter, has a signal loss that is four times that of the (BNE3x-xx) transceiver cable. If office transceiver cable is used, the maximum transceiver cable distance must be divided by 4. Thus, the maximum office transceiver cable length allowed is 12.5 meters (41 feet).

If the configuration includes a device and the device has any internal cabling equivalency, this should be subtracted from the 50 meter (164 feet) maximum before dividing by 4. For example, if a device has a 10 meter (32.8 foot) cabling equivalency and is attached to its transceiver using office transceiver cable, then the maximum allowable transceiver length is 50 meters (164 feet) minus 10 meters (32.8 feet) divided by 4. The arithmetic result yields 10 meters (32.8 feet). ▲ For device-specific information related to cabling equivalency, refer to the *DECconnect System Planning and Configuration Guide*.

- When connecting the bridge to a configuration that includes a DELNI, allow 5 meters (16.4 feet) cabling equivalency loss for the DELNI.

ThinWire Interface

The following rules and guidelines are for connecting a DECbridge 5xx/6xx unit to an IEEE 802.3/Ethernet network via the ThinWire interface.

- The maximum length for a continuous segment of ThinWire cable is 185 meters (606.9 feet).
- The minimum bend radius of ThinWire cable is 2 cm (0.75 inches).
- No more than 30 stations are allowed on a segment. The DEMPR, if configured, counts as one station. In an OPEN DECconnect configuration with faceplates and satellite equipment rooms, only 28 stations are allowed.
- No more than 60 male/female connector junctions are allowed on the segment.
- DECbridge 500 series directly supports ThinWire with an integral interface.
- DECbridge 600 series supports ThinWire via an AUI connection to a DESTA.
- The ThinWire cable must be properly terminated at both ends with 50-ohm terminators. If a DEMPR is attached to one end of the cable, the DEMPR provides the termination for that end; a terminator is still required for the other end.

DECbridge Devices in an FDDI-to-802.3/Ethernet ThinWire Topology

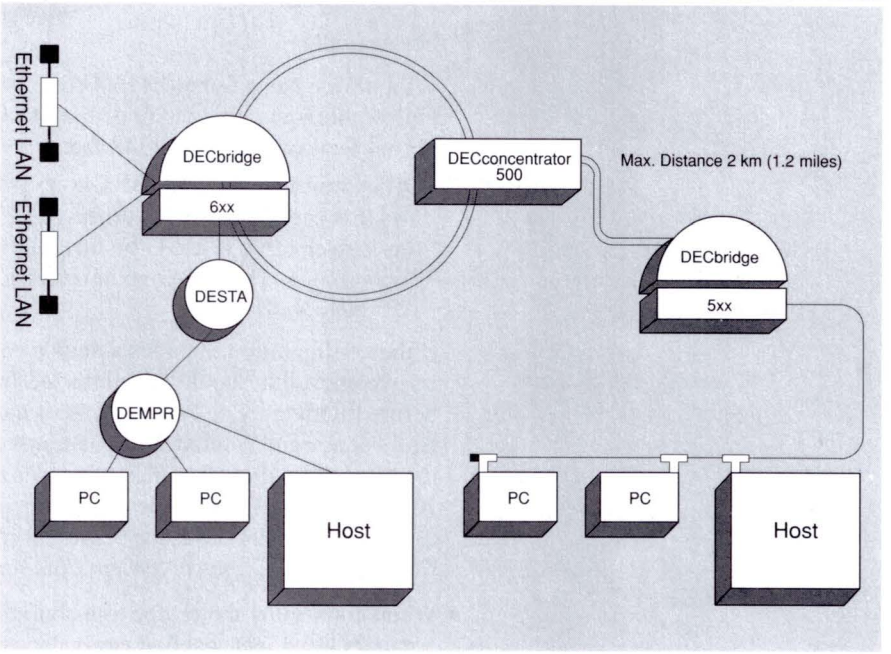

TBG-126-00

FDDI Cabling Requirements

Refer to the following table when configuring FDDI cabling.

FDDI Multimode Fiber Cable Matrix

	DECconcentrator 500					
FDDI Product	**A/B Module**	**4-Port ANSI Module**	**Low-Power Optics Module**	**DECbridge 500/600 Series**	**Wallbox FDDI Connector**	**Wallbox ST Connector**
DECconcentrator 500						
A/B Module	BN24B-xx	BN24B-xx	BN24D-xx	BN24B-xx (DAS versions)	See Note 1	See Note 1
4-Port ANSI module	BN24B-xx	N/A	N/A	BN24B-xx		
Low-power optics module	N/A	N/A	N/A	BN24D-xx		
DEC FDDIcontroller 400	BN24B-xx	BN24B-xx	BN24D-xx	BN24B-xx	BN24B-xx	BN24D-xx
DEC FDDIcontroller 700	BN24D-xx	BN24D-xx	BN24E-xx	BN24D-xx	BN24D-xx	BN24E-xx
DEC FDDIcontroller/EISA	BN24B-xx	BN24B-xx	BN24D-xx	BN24B-xx	BN24B-xx	BN24D-xx
Patch Panel	BN24D-xx	BN24D-xx	BN24E-xx	BN24D-xx	See Note 2	See Note 2

Cable Descriptions:

BN24B-xx = FDDI MIC-to-FDDI MIC patch cable
BN24D-xx = FDDI MIC-to-2.5 mm bayonet ST-type connector patch cables
BN24E-xx = Dual 2.5 mm bayonet ST-type connector patch cables

N/A = Not applicable

Note 1 – Digital recommends connecting the wallbox (either an FDDI MIC or ST connector) to any DECconcentrator 500 port module, A/B module, or DAS-based DECbridge device through a patch panel. This allows cable administration and is in compliance with the EIA/TIA 568 standard and OPEN DECconnect's horizontal wiring architecture.

Note 2 – Refer to the OPEN DECconnect System Fiber Optic Planning and Configuration Guide

Note: The maximum allowable loss for the OPEN DECconnect system splices equal 0.4 dB and connectors equal 0.7 dB. The maximum allowable system loss for an FDDI network is 11 dB with the recommended 62.5/125 micron multimode fiber type. The actual fiber cable length required must be determined during the fiber optic cableplant design phase.

Approved fiber optic cable manufacturers for use in the OPEN DECconnect system fiber optic structured wiring are: AT&T, Siecor, Belden/Cooper Industries, Mohawk, and Chromatic Technologies.

FDDI Copper Cabling Requirements

The following table lists shielded twisted-pair patch cables and cable types for the copper-based DECconcentrator 500 and DEC FDDIcontroller 700-C. This information is also available in the *DECconcentrator 500 ThinWire and Shielded Twisted-Pair Option Card Installation Manual* (EK-DEFCN-CM). Also included in the same manual are ThinWire cable evaluation procedures (Appendix A) and shielded twisted-pair cable evaluation procedures (Appendix B).

Shielded Twisted-Pair Patch Cables	
FDDI Option Cable	**Anixter Brothers**
DEFCN-SA (2.4 m approx)	140082

Shielded Twisted-Pair Cable Types		
Cable Types	**Anixter Brothers Part Number**	**IBM Corporation Part Number**
Type 1 (non-plenum)	317-036-2202-IBM	4716748
Type 1 (plenum)	325-023-2202-IBM	4716749
Type 2 (non-plenum)	318-037-2206-IBM	4716739
Type 2 (plenum)	315-023-2602-IBM	4716738
Type 6 (patch cable)	325-014-2206-IBM	4716743
For additional IBM cabling information, see the Anixter Brothers Catalog.		

Shielded Twisted-Pair Cables

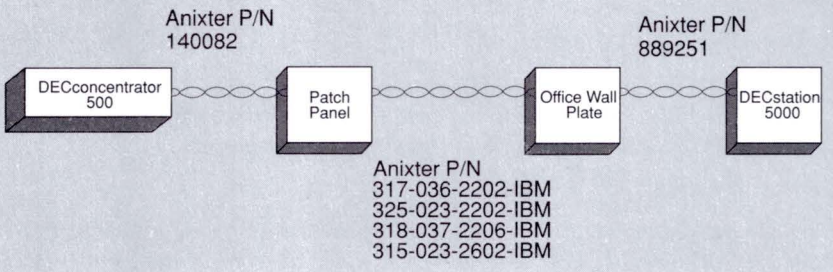

TBG-163-01

The following table lists ThinWire patch cables and cable types for the copper-based DECconcentrator 500 and DEC FDDIcontroller 700-C.

ThinWire Patch Cables	
Patch Cable	**Digital Part Number**
0.6 m	BC16K-02
3.05 m	BC16K-10

Behind-the-Wall ThinWire Cable Types (Unterminated)		
Cable Types	**Digital Part Number**	**Belden Part Number**
303 m spool (plenum)	H8244-A	89907
303 m spool (non-plenum)	H8243-A	9907

ThinWire Office Cable Types	
Cable Distance	**Digital Part Number**
1.8 m	BC16M-06
4.6 m	BC16M-15

ThinWire Office Cable Types (Continued)	
Cable Distance	**Digital Part Number**
9.2 m	BC16M-30
For additional information, refer to the OPEN DECconnect Building Wiring Components and Applications Catalog.	

ThinWire Cables

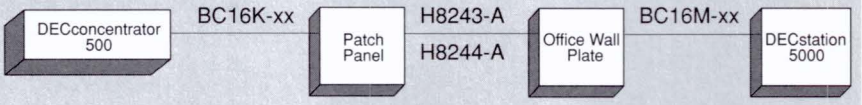

TBG-162–00

Single-Mode Fiber Patch Cables

The following table lists single-mode fiber (SMF) patch cables for duplex and simplex. Equivalent cables from other vendors can be substituted.

Single-Mode Fiber Patch Cables (Duplex)	
Patch Cable	**Anixter Brothers Part Number**
3 m FC-to-FC	FCFC3
3 m FC-to-ST	FCST3
3 m FC-to-Biconic	FCB3
10 m FC-to-FC	FCFC10
10 m FC-to-ST	FCST10
10 m FC-to-Biconic	FCB10

Single-Mode Fiber Patch Cables (Simplex)			
Patch Cable	**AMP Incorporated Part Number**	**AT&T Part Number**	**Dorran/3M Part Number**
3 m FC-to-FC	501868-4	LS2H2-H2-10	AALAL-AT0003
3 m FC-to-ST		LS2H2-E-10	AALAM-AT0003
3 m FC-to-Biconic	502141-3	LS2H2-A-10	AAAAL-AT0003
10 m FC-to-FC	501868-1	LS2H2-H2-32	AALAL-AT0010
10 m FC-to-ST		LS2H2-E-32	AALAM-AT0010
10 m FC-to-Biconic	502141-0	LS2H2-A-32	AAAAL-AT0010

Connector Couplers

The following table lists connector couplers from three vendors. Equivalent parts from other vendors may be substituted.

Connector Coupler		
Coupler	**Dorran/3M Part Number**	**AMP Incorporated Part Number**
FC-to-FC coupler	02-00075	501506-1
Connector Coupler Panel		
Coupler	**AT&T Part Number**	
Coupler Panel (accepts 6 couplers)	105 428 254	

Single-Mode Inline Loss Elements

The following table lists inline loss elements from two vendors. Equivalent parts from other vendors may be substituted.

Inline Loss Element	Amphenol Part Number	Aster Corporation Part Number
6 to 10 dB	945-999-1468-8	AS0170
12 to 16 dB	945-999-1468-14	AS0165

Enterprise Messaging Server

In designing systems for electronic messaging networks Digital has gained experience with various ways of laying out topologies. Based on this experience, Digital recommends the concept of the Enterprise Messaging Server.

Under this concept the geography of the network is subdivided into logical groups of individual locations or departments. A dedicated Enterprise Messaging Server is assigned to each of those locations to serve as a dedicated network server for MAILbus applications.

The Enterprise Messaging Server is dedicated for residency of the Message Router and all Gateways that are appropriate for the functions required in that particular geographic area as well as for servicing the interconnection with other Enterprise Messaging Servers; this generally includes residency of a DDS World Search Node. The Enterprise Messaging Server may be multiple systems and, if organizational needs dictate, there may be more than one Enterprise Messaging Server per location.

Enterprise Message Server Configuration

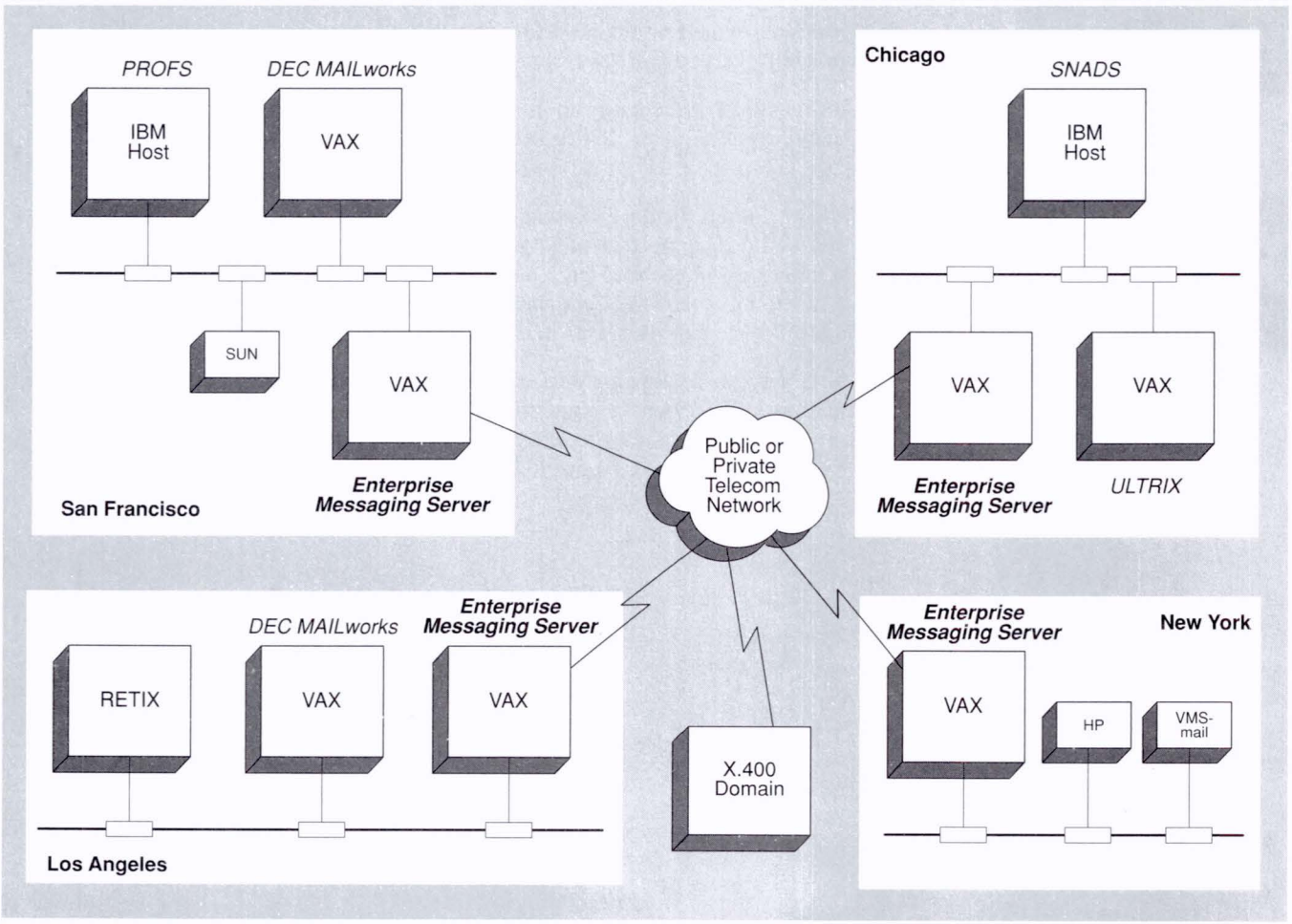

TBG-127-00

With the adoption of the Enterprise Messaging Server concept the enterprise network is organized into a number of geographic locations, each location containing one, or several, LAN (and even possibly WAN) network structures within that area. Each facility contains at least one Enterprise Messaging Server, providing the linkage with other Enterprise Messaging Servers as well as being the platform for the required Gateway functions within its own location. As a rule, users have no direct access to the Enterprise Messaging Servers; however, organizational needs may allow occasional deviation from this rule.

This modular approach to configuring the enterprise network under the Enterprise Messaging Server concept has several advantages:

- It allows for the implementation to take place in stages.
- Network management can be easily centralized or decentralized according to organizational needs.
- It will allow for a gradual integration process preserving previous investments.
- It enhances the ability to make additions or changes to the network in a local area without affecting the entire network.

The Enterprise Messaging Server may in fact be composed of more than one system depending on the need for capacity and system reliability as well as availability of computing resources at the time of installation.

Configuration of the hardware for the Enterprise Messaging Server varies with Gateway requirements, MAIL traffic intensity, size of MAIL Messages, and usage intensity of the Directory service and Management facilities.

To help shorten the development cycle, Digital has developed a method to quickly and accurately identify the hardware requirements for a wide variety of circumstances. This configuration tool is called "QUICKSTEP." It gives a direct answer to the question of which hardware is most advisable as a platform for a Enterprise Messaging Server in a particular environment.

The Enterprise Messaging Server can be ordered in specially packaged hardware, software, and services configurations. ▲ Refer to the Enterprise Messaging Server description for more information. Contact your local Digital representative if you need help in configuring your MAIL network.

QUICKSTEP

QUICKSTEP is a two-step method for determining the hardware requirements for an Enterprise Messaging Server.

STEP 1: Characterize the Workload

- Start with the Code Selection Table.
- At rows A and B at the top of the Code Selection Table, find the combination of average messages per day per week (AV/MSGS/DAY/DESK) and average message size (Av Msg Size [Kb]) that best describes the environment. If in doubt, use the Default Selection.
- Working down that column, find the letter in the row that corresponds to the ranges in the column on the left for the number of desks (C. Numof Desks) in the environment. The Number of Desks is the total electronic messaging users of Digital and other vendor's equipment (IBM, HP, etc.) in the environment.
- The letters A through F are the Equipment Category Codes.

Code Selection Table

Default Selection:														
A) Av Msgs/Day/Desk	1	1	1	1	2	2	2	2	4	4	4	8	8	16
B) Av Msg Size (Kb)	2	4	8	16	1	2	4	8	1	2	4	1	2	1
C) Num of Desks	**Equipment Category Codes**													
< 200	A	A	A	A	A	A	A	A	A	A	A	A	A	A
200 to 699	A	A	A	B	A	A	A	B	A	A	B	A	B	B
700 to 1,499	A	A	B	C	A	A	B	C	A	B	C	B	C	C
1,500 to 4,499	A	B	C	D	A	B	C	D	B	C	D	C	D	D
4,500 to 5,999	B	C	D	E	B	C	D	E	C	D	E	D	E	E
6,000 to 12,000	C	D	E	F	C	D	E	F	D	E	F	E	F	F

Fixed Assumptions: Off Node Messages, 20% of total; Peak Capacity, 40% of total daily workload in one hour

Installed gateways to include: MRX, MRGATE, MR/S, MRP

STEP 2: Select the Package

- Go to Enterprise Messaging Configurations.
- Match the letter in the Equipment Category Code column to the letter found in the next step.
- Under the Options column, select the package that provides the required balance between reliability, growth, and cost for your particular enterprise environment.

Enterprise Messaging Server Configurations

Equipment Category Code	Options	CPU	MB Memory	Disks	Type	Server Part Number
A	E.M.S	VAXserver 3100 — 20e	16	2	RZ24	Quotation on request
	STANDARD	VAXserver 3100 — 20e	16	3	RZ24	DV-31ESA-AA/A9
	ENHANCED	VAXserver 3300 Dual Hosted	32	5	RF30	DV-330S4-AA/A2/A3
B	E.M.S	VAXserver 4000–300	32	2	RF31	Quotation on request
	STANDARD	VAXserver 4000–300	32	4	RF31	DV-43JS1-A9
	ENHANCED	VAXserver 4000–200 Dual Hosted	32	7	RF31	DV-42RS1-A2/A3
C	STANDARD	VAXserver 6000–510	64	5	RA92	SV-6E02A-AK/AN
	ENHANCED	VAXserver 4000–300 Dual Hosted	64	8	RF31	DV-43JS1-A9
D	STANDARD	VAXserver 6000–520	128	5	RA92	SV-6E02A-BK/BN
	ENHANCED	VAXcluster 6000-510 (2)	64	8	RA92	SV-6E02A-AK/AN
E	SELECT	2 × Selection D or larger multiples of A, B, or C				
F	SELECT	4 × Selection D or larger multiples of A, B, or C				

E.M.S. is the Enterprise Messaging Server Package that includes hardware, software, and Enterprise Messaging Services. ▲ For further information, refer to the Enterprise Messaging Server description. Quantity of disks is based on the application of the VAX Message Router, VAX Message Router VMSmail Gateway, and VAX Message Router X.400 Gateway as included in the E.M.S. package. For additional applications of VAX Message Router/S Gateway, and/or VAX Message Router/P Gateway, additional disks are recommended to the total shown in the STANDARD and ENHANCED packages in the table above.

STANDARD is an economy package that satisfies the CPU and memory requirements, and provides disk space for separating the operating system software from the MR software and assumes the application of all gateways including VAX Message Router/S Gateway and VAX Message Router/P Gateway. The addition of Enterprise Messaging Services is recommended. ▲ For further information, refer to the Enterprise Messaging Server description.

ENHANCED is a robust package that provides increased reliability and supports future growth. The package consists of either a dual hosted or clustered (2) processor, each one capable of expansion through symmetric multiprocessing. The memory can support both processors comfortably. In addition to providing disk space to separate the operating system software from the MR software and also to separate the MR components, the package offers dual-ported volume shadowing and assumes the application of all gateways including VAX Message Router/S Gateway and VAX Message Router/P Gateway. The addition of Enterprise Messaging Services is recommended. ▲ For further information, refer to the Enterprise Messaging Server description.

FAULT TOLERANT — Where fault tolerance is required, consult the latest announcements for comparable fault tolerance equipment offerings.

DISKS — Where the Directory database is very large, additional disks may be required.

LARGE DESK POPULATIONS — Where it is necessary to evaluate combinations of smaller servers versus the use of larger servers, MAILbus Planning and Design services are recommended to perform the business analysis. For more information, refer to Section 7.

Product Performance Guidelines



This section contains the following topics:

Performance Guidelines Overview	B-1
DECnet Communications Software Performance Guidelines	B-2
Router Performance Guidelines	B-11
OSI Applications Performance Guidelines	B-15
DECnet System Services Performance Guidelines	B-18
Special Server Performance Guidelines	B-32
Digital to IBM Interconnect Product Performance Guidelines	B-33
Digital Internet Interconnect Product Performance Guidelines	B-39

Appendix B

Product Performance Guidelines

This section provides results from performance testing and network performance guidelines for the following types of products:

- DECnet communications software
- Routers
- OSI applications
- DECnet system services
- Terminal servers
- Digital/IBM interconnect products
- Digital/Internet interconnect products

The information in this section and in Appendix A should help in preparing preliminary network plans. In addition, Digital sales representatives and network specialists can give detailed network planning assistance.

DECnet RSX

This topic provides performance guidelines for file transfer and task-to-task communication for DECnet-11M-PLUS V4.0.

The performance of a network can be affected by several factors. One major consideration is the type of processor used. The CPU can be a limiting factor in terms of performance.

Another factor in determining network performance is the communication device used. Because a communication device with a low line speed can be the bottleneck in a configuration, it is important to choose a line that meets the user's needs. Note that the user-bit-transfer rate should not be expected to equal the line speed.

Throughput Data

When writing programs for task-to-task communications, there are trade-offs to consider. It is more difficult to develop software that uses multibuffering than software that uses single-buffering. Also, when tasks use multibuffering, it may be necessary to increase the number of network buffers. A program's buffering level may actually slow down execution time and increase user response time on the system. Each configuration and application has an "optimal" buffering level. It is important to consider at what point the small increase in performance is no longer worth the additional buffering required to extract the extra throughput. With this performance trade-off, it is necessary to evaluate and determine how the user's needs will be best satisfied.

The following figure illustrates how an increase in the buffering rate improves the bit rate and throughput as the buffering level increases from one to two. In a typical situation, expected results can range from 150 Kb/s to 600 Kb/s for multibuffering.

Effects of Multibuffering on Bit Rate

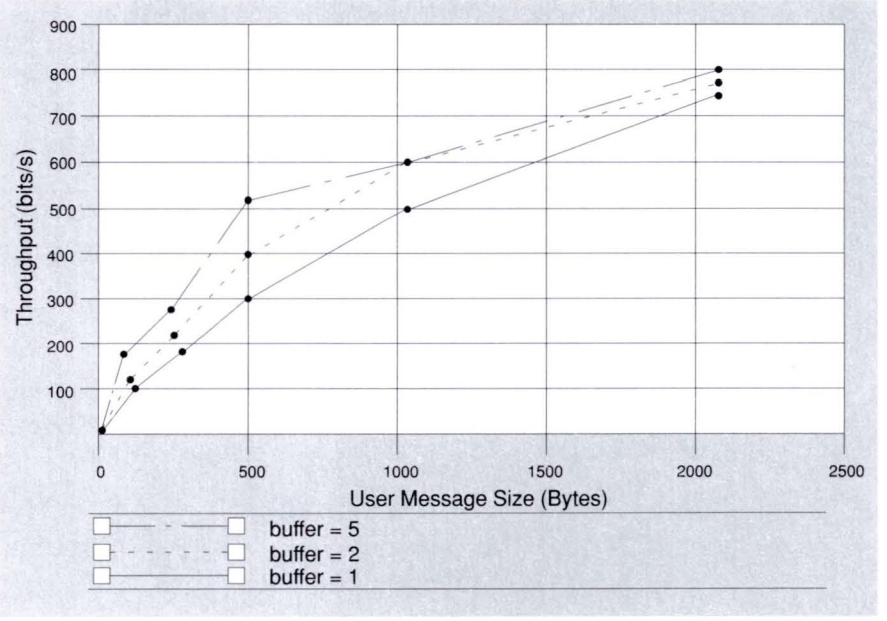

TBG-128-00

Transmission of a large message will generally have a higher throughput than that of a small message. All messages have an associated CPU overhead, independent of the message size. If the CPU is a limiting factor, the transmission of a long message will push more bits through than a small one will. In other words, holding the CPU utilization constant, a higher bit-transfer rate will be realized with a longer message.

Large user message sizes are more demanding on a system than small ones. With a limited capacity, an increase in throughput may not be worth the degradation of the total system. However, it is also not advisable to have a system buffer size smaller than normal user message size. In that situation, each message would have to be segmented.

The user should never expect to reach a bit rate equal to the line speed because there will always be some protocol overhead to consider. For a given level of buffering, throughput depends on processor speed, message size, and line speed. For single-buffering situations, one might typically expect rates of 50 Kb/s to 500 Kb/s.

CPU utilization generally decreases as message size increases primarily because of the fixed costs associated with transmission of each message. A large message has a lower CPU cost per byte and CPU cost per second because the fixed cost is distributed over a larger message and a longer transmission time period.

The following table lists the typical CPU utilizations for task-to-task communications over an 802.3/Ethernet local area network.

CPU Utilization for Task-to-Task Communications over 802.3/Ethernet

PDP Systems	CPU Utilization	Communication Device	Operating System
11/44 to 11/44	63% to 75%	DEUNA	RSX-11M-PLUS
11/53 to 11/53	85% to 97%	DEQNA	Micro/RSX*
11/83 to 11/83	85% to 95%	DEQNA	Micro/RSX

*The throughput can increase for PDP-11/53 systems by loading the network into lower memory space. This lower memory space is located on the CPU board.

File Transfers

The time required to transfer a file can be divided into two categories: connection time and transfer time. There is a fixed amount of connection time required to execute startup functions such as opening files and creating logical links. The transfer time is a function of the number of bits-per-unit of time that can be transmitted over the network by NFT/FAL and the file size.

In an actual case, an RMS FAL was installed on the remote node. ASCII files of different lengths were transferred from a local node to a remote node over the 802.3/Ethernet. The results from the NFT task are shown in the following table.

Network File Transfer Over 802.3/Ethernet		
Configuration	**Connection Time (secs)**	**Blocks Transferred**
11/44-to-11/44	2.5	60.24
11/44-to-11/750	2.7	34.36
11/53-to-1/53 (Network loaded by default)	2.9	45.45
11/83-to-11/83 (Micro/RSX)	2.2	82.64
11/83-to-11/83 (RSX-11M-PLUS)	2.2	84.75

Routing Nodes

Information regarding the amount of routing done by a system can be gathered by using NCP circuit counters. This tells how many packets have been routed through each circuit since the counters were zeroed.

Routing nodes are affected by many factors, including the amount of traffic on the network, the stability of the nodes in the network, the topology of the network, and the amount of work (other than routing) done by the routing node.

In a study of the packet throughput performance of two DECnet routing nodes, the following measurements resulted:

- The highest number of transit packets a PDP-11/44 node can route each second is 306. Note that this number decreases if routing updates are required, or system and network activity increases.
- The number of milliseconds required to transmit a packet through a VAX-11/750 and PDP-11/44 is 3.9 and 3.3, respectively. Note that this number increases if routing updates are required, or system and network activity increases.

Equal-Cost Load Splitting

DECnet RSX/11M-PLUS V4.0 supports a feature called equal-cost load splitting. A routing node can split its network load over communication paths of equal cost. Using this feature, the aggregate throughput for multiple paths is significantly higher than that of a single path.

The following figure compares the aggregate throughput for PDP-11/83-to-PDP-11/83 communications over three 9.6 Kb/s lines to that of one 9.6 Kb/s line. The buffering level for three line tests varies from one to five. In this figure, the aggregate throughput for three lines is about three times that for one line provided there is enough load to saturate all the lines (using large message sizes and high buffering levels). Using small packet sizes and low buffering levels results in less aggregate throughput, but is always higher than the single-line throughput. Users are able to take advantage of equal-cost load splitting when the line is the bottleneck.

Throughput with Equal-Cost Load Splitting

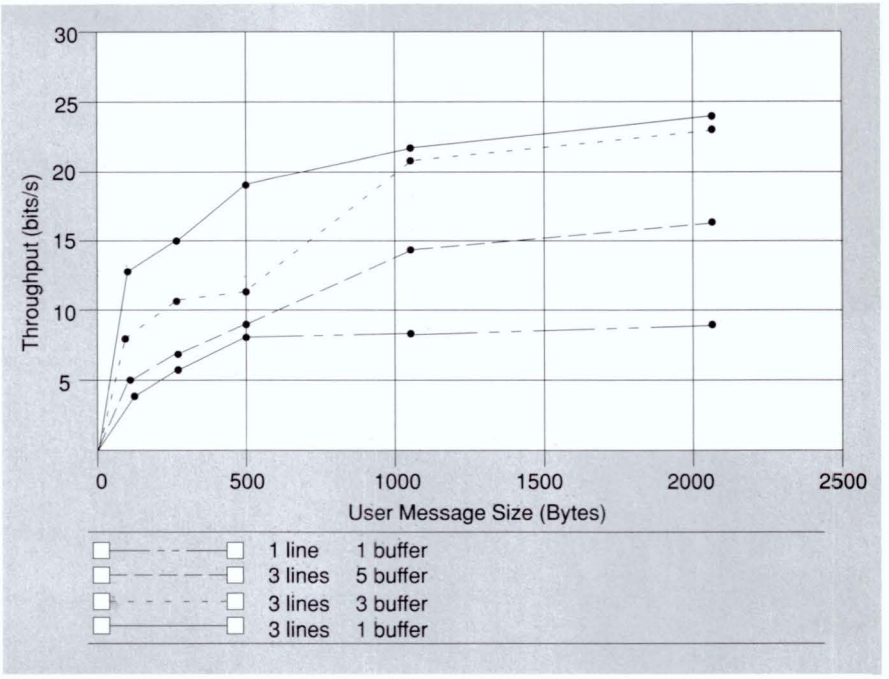

TBG-129-00

PATHWORKS for DOS

Performance software testing for the PATHWORKS for DOS product was conducted on standalone systems connected by unshared transmission media. Only those machines under test were on the network at the time of the tests. The remote node was running no other processes except those required to carry out the experiments. In general, the user cannot expect to see the same throughput and response times because most hosts and networks have multiple users contending for available resources.

In general the performance of the PATHWORKS for DOS software has remained equal to its predecessor; however, in the area of task-to-task communications, there is some significant performance improvement.

Testing also showed that running the networking software from expanded memory, a capability introduced for this version, attained the same performance as running from conventional memory on the machines tested.

Test Configurations for the PATHWORKS for DOS Software

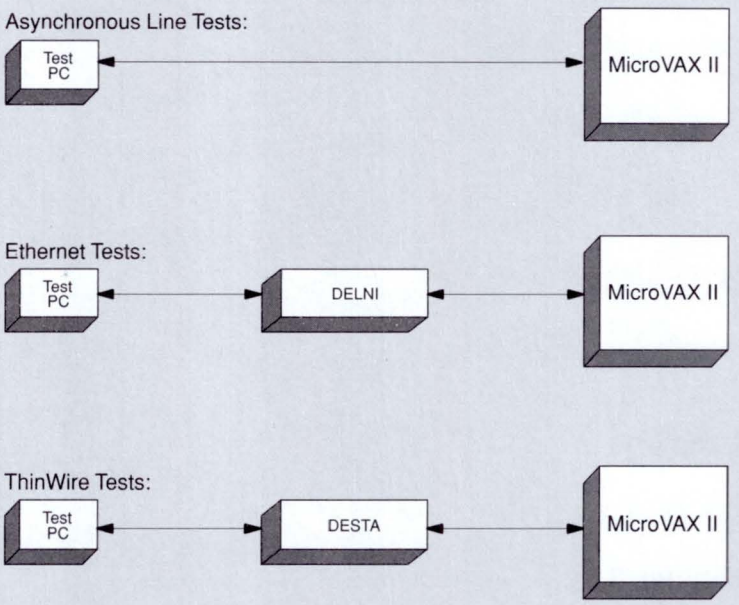

TBG-151-00

Personal Computers Used in Testing

Machine	Speed/MHz	Memory/MB	Disk/MB
IBM PC/XT	4.77	1.1	10
IBM PC/AT	6	2.5	20
IBM PS/2 30	10	1.1	20
IBM PS/2 70	25	2.0	30*
COMPAQ 386	25	6.0	112

*Test partition size (tests were done with MS-DOS 3.3 and COMPAQ DOS 3.31).

File Transfer

The total transfer time of a file is composed of two parts. The first is a fixed overhead to initialize the process. This is referred to as the startup cost. The second is the time to transfer the file. The transfer time is expressed in seconds-per-block.

With the asynchronous line, the line speed is the bottleneck of the system and the transfer time for all the machines is approximately the same. The differences in throughput are a result of the differences in startup times. Faster processors have shorter startup times, faster overall response times, and consequently higher throughput.

With 802.3/Ethernet local area networks, the line speed is not the limiting factor; therefore, the speed of the processor is a factor in both the startup cost and the block transfer cost.

DECnet/PATHWORKS for DOS 3.0 Startup Times and Transfer Costs

Processor	Startup Time (sec)	Transfer Cost per Block
9.6 Kb/s Asynchronous Line		
PC/XT → Micro VAX	10.01	0.59
PC/AT → Micro VAX (6 MHz)	6.48	0.58
PS/2 Model 30 → Micro VAX	8.62	0.58
PS/2 Model 70 → Micro VAX	4.04	0.58
Compaq 386 → Micro VAX	3.92	0.57
802.3/Ethernet Line		
PC/XT → Micro VAX	8.40	0.11
PC/AT → Micro VAX (6 MHz)	4.23	0.05
PS/2 Model 30 → Micro VAX	7.00	0.06
PS/2 Model 70 → Micro VAX	3.39	0.02
Compaq 386 → Micro VAX	2.95	0.02
Expanded Memory		
PC/XT → Micro VAX	8.91	0.11
PC/AT → Micro VAX (6 MHz)	4.37	0.05
PS/2 Model 30 → Micro VAX	7.95	0.07
PS/2 Model 70 → Micro VAX	3.29	0.02
Compaq 386 → Micro VAX	3.08	0.02

To calculate an approximate response time, multiply the transfer time by the number of blocks of the file and add the startup cost as shown in the following equation:

(Blocks × transfer cost per block) + startup time = response time

For example, the following equation determines the approximate response time to transfer a 1,000-block file from an IBM/XT to a MicroVAX II over a 9.6 Kb/s line.

(1,000 × 0.59) + 10.01 = 600.01 seconds

Task-to-Task Communications

When using task-to-task communications, the segment buffer size for all communications was set at the system default of 557 bytes, which includes the user-message and protocol overhead. For the most efficient use of the network, the user should use these sizes as a guideline when programming intertask communications.

When using task-to-task communications on the local area network, the throughput increases with the message size. The following table shows the measured throughput for the tested PCs.

DECnet/PATHWORKS for DOS Message Throughput, MB/s

Processor	Message Size (bytes)		
	126	1028	4096
IBM PC/XT	0.01	0.03	0.06
IBM PC/AT	0.01	0.08	0.13
PS/2 Model 30	0.01	0.06	0.10
PS/2 Model 70	0.03	0.22	0.41
Compaq 386	0.03	0.15	0.18

Conclusion

- Performance has been improved since the previous revision.
- Task-to-task performance is considerably better, especially under load.
- Expanded memory operation does not significantly impact performance.

PATHWORKS for OS/2

The performance of the PATHWORKS for OS/2 product was measured for file transfer, task-to-task, disk I/O, and some simple file system commands, across a range of PCs. The performance was found to be equal to that of the DOS-based product, except in the task-to-task testing where it is considerably more efficient, especially under load. This benefit arises from the efficiency of the OS/2 architecture.

Configuration and Methods

Testing was done on a private network, to make sure that no other traffic could affect the test results. The test driver was a MicroVAX system running VMS software. A range of PCs and hardware configurations was used as shown in the following figure.

Test Configurations for PATHWORKS for OS/2

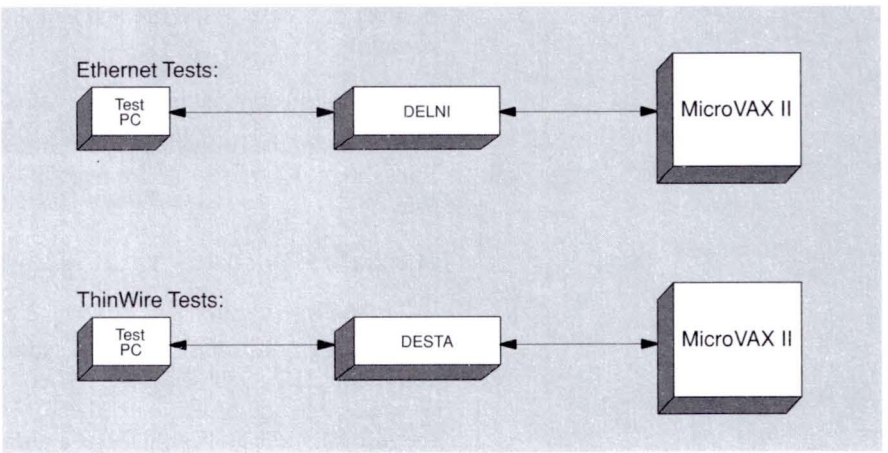

TBG-152-00

PCs Used in Testing			
Machine	**Speed/MHz**	**Memory/MB**	**Disk/MB**
IBM PC/AT	6	2.5	20
IBM PS/2 30/286	10	3.0	20
IBM PS/2 70	25	2.0	30*
IBM PS/2 80	20	3.0	30*
COMPAQ 386	25	6.0	112
*Partition size tests done with OS/2 V1.1			

The file transfer tests were done using the NFT utility to transfer 100 and 500 block files to and from the MicroVAX system. Separate I/O tests were done with a test program written to transfer 128 and 256 byte records, to allow the transfer time attributable to the actual transfer to be measured. Task-to-task testing was done using the Digital DTS/DTR test utility supplied as part of Digital networking products. Packet sizes from 128 to 4,096 bytes were tested. Finally some simple commands were executed locally and across the network. These commands included file creation, typing the contents to the screen, file copying, and file deletion.

PATHWORKS for OS/2 Startup Times and Transfer Costs		
Processor	**Startup Time (sec)**	**Transfer Cost per Block**
802.3/Ethernet Line		
PC/AT → Micro VAX (6 MHz)	6.36	0.07
PS/2 Model 30 → Micro VAX	6.12	0.04
PS/2 Model 70 → Micro VAX	2.79	0.02
PS/2 Model 80 → Micro VAX	2.75	0.03
Compaq 386 → Micro VAX	2.95	0.02

To calculate an approximate response time, multiply the transfer time by the number of blocks of the file and add the startup cost as shown in the following equation:

(Blocks × transfer cost per block) + startup time = response time

For example, the following equation determines the approximate response time to transfer a 1,000-block file from an IBM/AT to a MicroVAX II over a 9.6 Kb/s line:

(1,000 × 0.07) + 6.36 = 76.36 seconds

Task-to-Task Communications

When using task-to-task communications, segment buffer size for all communications was set at the system default of 557 bytes, which includes the user-message and protocol overhead. For the most efficient use of the network, the user should use these sizes as a guideline when programming intertask communications.

When using task-to-task communications on the local area network, the throughput increases with message size. The following table show the measured throughput for the tested PCs.

PATHWORKS for OS/2 Message Throughput, MB/s

Processor	**Message Size (bytes)**		
	126	**1028**	**4096**
IBM PC/AT	0.01	0.03	0.06
PS/2 Model 30	0.01	0.05	0.13
PS/2 Model 70	0.02	0.18	0.40
PS/2 Model 80	0.03	0.09	0.25
Compaq 386	0.02	0.15	0.27

Conclusion

- Performance is generally equal to the DOS product.
- Task-to-task performance is considerably better, especially under load.

DECrouter 250

The DECrouter 250 is a dedicated routing system with one Ethernet port and eight synchronous/asynchronous DDCMP ports. It supports both intra-area and inter-area routing service in the Phase IV and Phase IV+ environment.

Performance

The performance of the DECrouter 250 is a function of the communication configurations and message traffic pattern. Thus, the router performance depends on the following factors:

- Communication types
- Communication line bandwidth

For serial line communications, the DECrouter 250 saturates all communication lines with minimum size 64 byte packets. In addition, the DECrouter 250 can support the path splitting up to four paths.

Configuration and Methods

The DECrouter 250 provides access to and from Phase IV DECnet nodes on a local area network (LAN) to Phase III or Phase IV DECnet nodes over synchronous/asynchronous lines. These nodes may be located either locally, via dedicated wiring, or remotely via modem connections.

Line Support

The DECrouter 250 can be set up in a number of ways. The number of synchronous/asynchronous lines supported depends on the electrical interface and the maximum line speed in use (64 Kb/s for synchronous lines, and 19.2 Kb/s for asynchronous lines).

The following table shows the number of lines supported for each combination of line speed and electrical interface.

Interface Type	Maximum Line Speed (Kb/s)		
	9.6	19.2	64
V.28/V.24 (RS-232-C/D)	–	8	–
V.36/V.11 (RS-422/RS449)	–	8	–
V.10 (RS423)	–	8	–
V.35	–	–	–
V.28/V.24 (RS-232-C/D)	4	–	–
V.36/V11 (RS-422/RS449)	4	–	1
V.10 (RS423)	4	–	1
V.35	4	–	1
V.28/V.24 (RS-232-C/D)	–	–	–
V.36/V11 (RS-422/RS449)	–	–	2
V.10 (RS423)	–	–	2
V.35	–	–	2

Test Situation

All measurements were conducted on standalone systems and a private Ethernet. The performance of the DECrouter 250 was tested for five different types of communication. The throughput was measured with all lines running full-duplex DDCMP over a point-to-point link.

The hardware used was:

- A DECrouter 250 hardware box (an MC68020 processor with a 16.7 MHz clock, and 4 MB of DRAM memory)
- DEC MicroServers (DEMSAs) which were used for routing packet generation and reception
- A MicroVAX system which was used as a load host and to collect router line (and circuit) counter

The software used was:

- DECrouter 250 V1.0
- Routing Traffic Generator (RTG)

Computing Throughput from Available Routers

The packet throughput can be computed from an existing router by examining the various Network Control Program (NCP) circuit counters for the router and using the following equations:

Ethernet Circuit Counter Equation:

$$\text{Average total transit packets} = \frac{(\text{Transit packet sent} + \text{transit packet received})}{2}$$

$$\text{Throughput} = \frac{\text{Total transit packets}}{\text{Seconds since counters were last zero}}$$

DDCMP Synchronous/Asynchronous Circuit Counter Equation:

$$\text{Total transit packets} = \text{transit packet sent} + \text{transit packet received}$$

$$\text{Throughput} = \frac{\text{Total transit packets}}{\text{Seconds since counters were last zero}}$$

Computing Throughput from Line Bandwidth

An alternate metric is the maximum packet delivery rate possible for any particular synchronous/asynchronous line. This approach is very useful when the actual throughput can not be determined ahead of time, and the communication line becomes the bottleneck. Individuals can use it to estimate the synchronous/a-synchronous line throughput.

The maximum packet delivery rate is computed as follows:

$$\text{Throughput} = \frac{\text{Line bandwidth (bits/s)} \times \text{transmission mode}}{(\text{packet size} + \text{interpacket gap}) \times \text{bits/character}}$$

Transmission mode = 2 for full-duplex
= 1 for half-duplex

One character = 8 bits for DDCMP synchronous transmission
= 10 bits for DDCMP asynchronous transmission

Individuals can calculate the theoretical maximum throughput when they set the transmission inter-packet gap equal to 0.

Test Results

The measured throughput for Ethernet-to-Ethernet communication with a minimum packet size of 64 bytes, synchronous communication with an average packet size of 82 bytes, and asynchronous communication with an average packet size of 75 bytes are listed in the following table. These throughputs were measured with all lines running full duplex DDCMP over a point-to-point line.

The predicted throughput is an extrapolation of the measured throughput at 100% CPU utilization or 100% line utilization whichever is less.

Maximum Packets Per Second

Type of Communication	%CPU Utilization	Measured Throughput	Predicted Throughput
Ethernet-to-Ethernet	90.5	4996	5520
Synchronous-to-Ethernet with 2 × 64 Kb/s lines	49	354	354*
Synchronous-to-Synchronous with 1 × 64 Kb/s lines	44	175	175%
Asynchronous-to-Asynchronous with 4 × 4 19.2 Kb/s lines	60	195	195*
Asynchronous-to-Ethernet with 8 × 19.2 Kb/s lines	64	394	394*

*The transmission lines are bottleneck.

DEC X25router 2000

Configuring the DEC X25router 2000 is influenced primarily by trade-offs of cost and performance while satisfying the user's application requirements. Network applications typically range from low-speed, low-cost situations (that is, connecting a few remote lines over low-speed communications lines) to those of relatively high performance (that is, connecting two local area networks). The addition of X.25 packet switching considerations to those associated with point-to-point DECnet communications necessarily makes arriving at the optimum configuration more difficult.

Note that the rate at which user data can be transmitted (throughput) over a communications line approaches, but never reaches, the actual line speed. The actual throughput is a function of many factors, including the line quality, protocol overhead, topology, and network application.

The DEC X25router 2000 supports four lines at 64 Kb/s, or three lines at 256 Kb/s, or two lines at 384 Kb/s. The DEC X25router 2000 offers superior price/performance especially in the area of routing DECnet packets over an X.25 network. This is because the implementation of Data Link Mapping (DLM) has been optimized with considerable performance benefits.

Traditionally many customers have implemented host-based X.25 routing. The cost of this solution is not just the cost of the communications controller but also of the CPU cycles it consumes. The amount of the CPU utilized varies considerably with the network size and application, but whenever routing requires more than a standalone system, an DEC X25router solution will generally be more cost-effective. Indeed, in the case of the midrange to high-performance systems, a dedicated DEC X25router 2000 can usually be more cost-effective even for standalone situations.

The DEC X25router 2000 supports a maximum of 512 SVCs. However, if the DEC X25router 2000 is used for routing and X.25 gateway access, this number depends on the ratio of routing to X.25 traffic. As an X.25 gateway, the DEC X25router 2000 can support up to 120 concurrent X.25 sessions for terminal-to-host applications.

The following table compares DEC X25router 2000 performance against MicroVAX II and VAX 3500 systems with DSV11s that were dedicated as a communications server. Two scenarios were examined:

- Routing DECnet packets over an X.25 Packet Switched Data Network (PSDN).
- Routing native X.25 packets over a PSDN as an X.25 Gateway. In these performance figures, pps refers to packets received from the 802.3/Ethernet local area networks and routed onto the synchronous lines or vice versa.

Performance for DEC MicroServer Compared with MicroVAX II and VAX 3500 using DSV11s

Processor	DECnet over X.25 (pps)	Native X.25 (pps)
X25router 2000	170	150
MicroVAX II with two DSV11s	90	95
VAX 3500 with two DSV11s	160	170

To achieve a viable configuration, the user or a Digital software specialist should perform a level of application analysis that addresses these factors.

FTAM

FTAM software is an Open Systems Interconnection (OSI) product that implements the OSI File Transfer, Access, and Management standard (FTAM/ ISO 8571). When implemented by other vendors, this standard enables you to transfer, access, and manage files that reside on those other vendors' computer systems.

FTAM allows users to append, copy, delete, rename, and produce a directory listing of files on heterogeneous systems through use of the OSI protocol stack. Using FTAM, you can transfer unstructured text files (FTAM–1), sequential text files having either stream or variable record format (FTAM–2), and unstructured files containing binary data (FTAM–3).

ULTRIX FTAM V1.0

The ULTRIX FTAM tests were conducted on VAXserver 3600s and DECstation 3100s. Performance comparisons were made between DECnet ULTRIX V5.1/TP4, TCP/IP V4.2, File Transfer Protocol (FTP), and ULTRIX FTAM V1.0.

It should be noted that the file access in a DECnet environment and file access over OSI are functionally different. Therefore, comparing DECnet DAP performance with FTAM performance is like comparing apples and oranges.

The primary performance metrics for a particular configuration are

- Maximum throughput
- CPU load on each processor
- Elapsed time for an operation

The elapsed time is the time that passes between te entry of the command and the return of the prompt. For a file "copy" command, this includes the file access on disk, time to establish a virtual circuit, time to transfer the file, and time to disconnect the circuit.

The CPU usages on the local and remote nodes are measured with a drone process which effectively attributes all available CPU time to the process.

The throughput times shown in the tables on the following pages were calculated by measuring the elapsed time for file transfers of several files of different sizes, using linear regression to arrive at the slope-intercept form for elapsed time. The Y-intercept gives the setup time, and the slope, which is a measure of time per block, directly translates into maximum throughput.

ULTRIX FTAM on DECstation 3100 results

The following table shows that the throughput of ULTRIX FTAM V1.0 is greater than that of DECnet ULTRIX, and only 15% less than that of TCP/IP (for FTAM–1 files). ULTRIX FTAM again has greater throughput than DECnet ULTRIX (for FTAM–3 files), and approximately 22% less throughput than that of TCP/IP–FTP. The elapsed time to set up the connection for ULTRIX FTAM is somewhat greater than that of DECnet ULTRIX and that of TCP/IP FTP.

Comparative FTAM Test Results, Throughput, Kb/s, on DECstation 3100s

Protocol Type	Test Type	FTAM–1 Setup Cost (sec)	Through-put (Kb/s)	FTAM–3 Setup Cost (sec)	Through-put (Kb/s)
ULTRIX FTAM	Push	1.99	1194	2.00	1684
ULTRIX FTAM	Pull	2.21	1211	2.10	1681
DECnet ULTRIX	Push	1.29	1133	1.34	1117
DECnet ULTRIX	Pull	1.15	971	1.32	1202
TCP/IP FTP	Push	0.58	1396	0.57	2158
TCP/IP FTP	Pull	0.57	1374	0.57	2203

The following table presents the CPU usage for ULTRIX FTAM operations compared to DECnet ULTRIX and TCP/IP (for FTAM–1 and FTAM–3 files). The setup costs of the initiator (local CPU) and responder (remote CPU) of ULTRIX FTAM, are larger than those of DECnet ULTRIX or TCP/IP. The incremental costs per block, however, are quite comparable to those of Decnet/ ULTRIX (for FTAM–1 and FTAM–3 files).

FTAM–1 Comparative File Copy CPU Usage, on DECstation 3100s

		Local CPU		Remote CPU	
Protocol Type	Test Type	Setup Cost (msec)	Cost/ Block	Setup Cost (msec)	Cost/ Block
ULTRIX FTAM	Push	618	2.73	807	2.98
ULTRIX FTAM	Pull	566	3.04	844	2.65
DECnet ULTRIX	Push	324	2.38	530	2.95
DECnet ULTRIX	Pull	338	2.51	449	3.61
TCP/IP FTP	Push	181	2.30	253	2.52
TCP/IP FTP	Pull	215	2.65	219	2.29
FTAM–3 Comparative File Copy CPU Usage, on DECstation 3100s					
ULTRIX FTAM	Push	585	2.10	768	2.09
ULTRIX FTAM	Pull	617	2.13	706	2.10
DECnet ULTRIX	Push	320	2.03	465	2.19
DECnet ULTRIX	Pull	328	2.02	415	2.03
TCP/IP FTP	Push	172	1.41	322	1.61
TCP/IP FTP	Pull	201	1.65	219	1.40

ULTRIX FTAM on VAXserver 3600 results

The following tables show that the throughput of ULTRIX FTAM is greater than that of DECnet ULTRIX and only 22% less than that of TCP/IP (for FTAM–1 files). ULTRIX FTAM again has greater throughput than that of DECnet ULTRIX (for FTAM–3 files), and aproximately 29% less than that of TCP/IP FTP. The elapsed time to setup the connection for ULTRIX FTAM is somewhat greater than that of DECnet ULTRIX and that of TCP/IP FTP.

Comparative FTAM Test Results, Throughput, Kb/s

Protocol Type	Test Type	FTAM–1 Setup Cost (sec)	Through-put (Kb/s)	FTAM–3 Setup Cost (sec)	Through-put (Kb/s)
ULTRIX FTAM	Push	3.88	586	3.93	1135
ULTRIX FTAM	Pull	4.31	590	4.04	1167
DECnet ULTRIX	Push	2.15	518	2.29	726
DECnet ULTRIX	Pull	2.10	350	2.33	748
TCP/IP FTP	Push	1.35	749	1.33	1605
TCP/IP FTP	Pull	1.25	648	1.28	1624

The following tables show that the cost per block for ULTRIX FTAM is less than that of DECnet ULTRIX (for FTAM–1 and FTAM–3 file types). ULTRIX FTAM has a larger setup cost than that of DECnet ULTRIX and TCP/IP FTP (for the FTAM–1 and FTAM–3 file types).

FTAM–1 Comparative File Copy CPU Usage on VAXserver 3600s

		Local CPU		Remote CPU	
Protocol Type	Test Type	Setup Cost (msec)	Cost/ Block	Setup Cost (msec)	Cost/ Block
ULTRIX FTAM	Push	994	6.49	1792	5.17
ULTRIX FTAM	Pull	973	5.21	1918	6.42
DECnet ULTRIX	Push	766	6.56	1159	7.15
DECnet ULTRIX	Pull	716	6.30	1163	10.87
TCP/IP FTP	Push	390	5.06	668	4.69
TCP/IP FTP	Pull	390	5.91	679	4.45
FTAM–3 Comparative File Copy CPU Usage on VAXserver 3600s					
ULTRIX FTAM	Push	1088	3.30	1681	3.00
ULTRIX FTAM	Pull	1077	3.05	1672	3.21
DECnet ULTRIX	Push	584	4.74	1151	5.08
DECnet ULTRIX	Pull	661	4.31	1152	4.69
TCP/IP FTP	Push	305	1.98	716	2.29
TCP/IP FTP	Pull	386	2.31	622	1.94

Distributed File Service V1.1

Standard file access involves a user accessing a file on a local disk. The VAX Distributed File Service (DFS) V1.1 is a VMS layered product that provides DECnet-VAX users with high-speed, transparent access to files stored on remote disks. DFS is best for users who require frequent access to, and sharing of files on remote systems.

DFS Capacity and Capacity Planning

The typical DFS environment comprises a large number of clients accessing a server. The node that issues a request for remote file access is a client, and the node where the file resides is a server. When using DFS to access remote files, data will be processed by the client CPU, communication controllers, the network, the server CPU, and the server disk drive.

These devices constitute the DFS operating environment. The device with the least capacity will constrain DFS maximum throughput. It is called the bottleneck in the DFS environment. The capacity of the bottleneck will determine DFS maximum throughput, which is DFS capacity.

The tests were done across configurations consisting of various server CPU type, communication controller, and server disk drive combinations. The tests were done on RMS record I/O sequential READ and run on VMS 5.0. SYSGEN parameters NPAGEDYN, INTSTKPAGES, GBLSECTIONS, GBLPAGES and CHANNELCNT were set according to the recommendations made by the VAX Distributed File Service Installation Guide. The RMS multiblock count was set to 16, multibuffer count to 3, NCP pipeline quota to 32,767, and DFS buffer size to 9,218; and SRPCOUNT, IRPCOUNT, and LRPCOUNT are increased to have at least 20 free packets each. DFS maximum throughputs and bottlenecks for these configurations using standard Ethernet as network medium are given in the following table.

DFS V1.1 Capacity

Server CPU Type	Communication Controller	Disks	Capacity*	Bottleneck
VAX 8700, VAX 8800, VAX 8810, VAX 8820, VAX 8830, VAX 8840, VAX 8842	DEBNA	RA	248	DEBNA
VAX 8700, VAX 8800, VAX 8810, VAX 8820, VAX 8830, VAX 8840, VAX 8842	DELUA	RA	136	DELUA
VAX 8600, VAX 8650	DELUA	RA	136	DELUA
VAX 8600, VAX 8650	DEUNA	RA	68	DEUNA
VAX 8500, VAX 8530, VAX 8550	DEBNA	RA	248	DEBNA
MicroVAX 3500, MicroVAX 3600, VAXstation 3200, VAXstation 3500	DELQA	RA	214	DELQA
MicroVAX II, VAXstation II/GPX	DEQLA DEQNA	RA	124	CPU
MicroVAX II, VAXstation II/GPX	DEQNA	RD	109	RQDX3
VAX 11/750	DELUA DEUNA	RA	63	CPU

*4-block I/Os per second.

It can be seen from the preceding table that choosing a more powerful CPU for a server does not guarantee better performance, because for high-end and midrange machine servers, the capacity of the server's communication controller bottlenecks DFS performance. That is, the communication controller's capacity is saturated before the server CPU is. In particular, if a DELUA or DEUNA is used instead of DEBNA for high-end machine servers, DFS capacity will be significantly lower. To ensure good performance, both server CPU and its communication controller types must be carefully chosen.

Factors Affecting Maximum Throughput

Note that DFS maximum throughput cannot be achieved when only one single user is using DFS to access files in a server. DFS maximum throughput can be achieved only when the bottleneck's capacity is saturated. In general, a single user will not saturate the bottleneck. As an example, a single user on a MicroVAX II/RD client can achieve a throughput of 52 I/Os per second for the VAX 8700/DEBNA/RA configuration, although the configuration has a capacity of 248 I/Os per second.

DFS maximum throughput may be achieved with multiple DFS users on several clients. The per-user throughput will, however, drop when the number of users increase. For example, for the MicroVAX 3500/DELQA configuration, the per-user throughput is 890 Kb/s with one user, but it drops to 460 Kb/s with eight users, although the overall DFS throughput increases to 3.67 Mb/s. A client with a more powerful CPU will not get a larger share of DFS capacity when the DFS is saturated. A powerful CPU will only have a drawing power when the server CPU is lightly loaded or when few requests are being queued. The server CPU is the critical resource with all active clients contending for service, but essentially without priority constraints. If the server CPU is lightly loaded, a client with more powerful CPU may get a bigger share of DFS capacity.

To answer the question of how many users can be supported by DFS for a given configuration, the following can be done:

- Users must first define the minimum throughput requirement for their applications. If it is difficult to assess the minimum requirement in terms of Mb/s, an alternative is to find a good approximation by using the local file access in a MicroVAX II RD as a yardstick.
- The RMS record I/O sequential READ local file access throughput measured is 57 I/Os per second. Users may want to have at least two-thirds of the local file access throughput, which is 38 I/Os per second. The maximum throughput obtained from the following table divided by the minimum throughput requirement is the number of active users that can be supported by DFS. For example, if a VAX 8700 DEBNA is used, whose maximum DFS throughput is 248 I/Os per second, at least six active users can be supported with per-user throughput greater than 38 I/Os per second.
- Note that here we use "active" users instead of just users. While six active users can be supported to satisfy the minimum per-user throughput requirement, more than six users can be supported as long as only six users may be using DFS to access remote files at the same time. The information, average number of active users is important because, for example, a large number of workstations may be connected to a server, but often only a small percentage of them are using DFS at the same time.

  The number of active DFS users can be obtained at any time by using the DFS control command SET SERVER/INVALIDATE_PERSONA_CACHE to flush DFS persona cache on the server. After a short period of time DFS will construct a fresh user list, and by using the DFS control command SHOW SERVER/USER you can see the current active DFS users. Monitoring the number of active users over a period of time will indicate the DFS load, which can be used to find the percentage of active users.

Performance

When the checksum is disabled, DFS performance using a MicroVAX II/RA as a server resembles that of local file access in a MicroVAX II/RD, and is significantly faster than DECnet/DAP for sequential file access of RMS records of 8,192 bytes or smaller. In fact, the smaller the record size, the more performance gain DFS will have over DECnet/DAP. For example, in the MicroVAX II/RD-MicroVAX II/RA client-server configuration, using DFS to read data from a sequential file in a MicroVAX II/RA server is 267% faster than DECnet/DAP for the record size of 512 bytes and 51% faster for the record size of 2,048 bytes. However, when record size is larger than 8,192 bytes or each network I/O transfers more than 8,192 bytes of data, DFS may not be the optimal file access means.

The figure "DECnet/DAP, DFS, and Local File Access Performance Comparison" compares the RMS record I/O sequential READ performance of DFS, DECnet/DAP, and local file access using the MicroVAX II/RD-MicroVAX II/RA configuration. Their CPU time comparison using a MicroVAX II/RA and a VAX 8700/RA as a server is shown in the figure "DECnet/DAP DFS, and Local File Access CPU Time Comparison." The CPU times for local file access in the CPU time comparison figure are measured for a MicroVAX II/RD, MicroVAX II/RA and VAX 8700. Note that in both figures DFS throughput is measured with checksum OFF, and DECnet/DAP with checksum ON. In the *VAX Distributed File Service Management Guide*, it is suggested that DFS checksum be run for a short time and turned off after no checksum errors are found. The use of DFS checksum will consume additional capacity. ▲ Refer to the *VAX Distributed File Service Management Guide* for more checksum information. DECnet/DAP checksum is considered part of normal DECnet/DAP operations, but can be disabled if so desired.

DECnet/DAP, DFS and Local File Access Performance Comparison

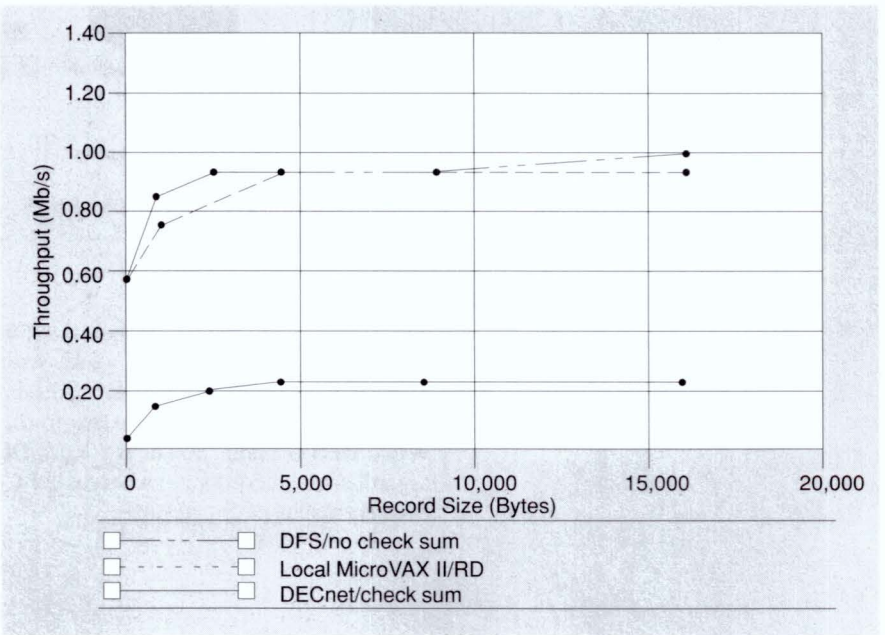

TBG-130-00

Throughput Comparision Values

DFS/No Checksum	MicroVAX II/RD	DECnet/Checksum
0.59	0.53	0.04
0.88	0.75	0.13
0.92	0.93	0.19
0.93	0.94	0.21
0.93	0.94	0.21
1.00	0.93	0.23

Effects of Multibuffering on Bit Rate

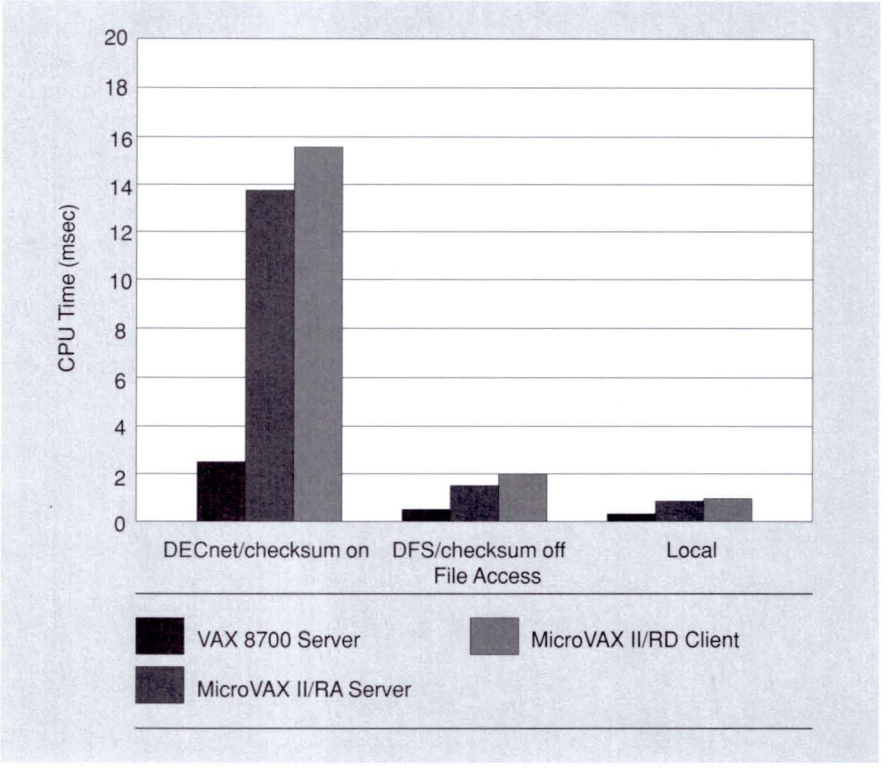

TBG-131-00

The figure depicting throughput comparison demonstrates that the performance of both DECnet/DAP and DFS varies with record size, and has better performance than DECnet/DAP under light load (single client). As the number of active users increases, the DFS load increases to the extent that the bottleneck is saturated. When DFS is under this heavy load, DFS performance will remain constant regardless of record size, whereas DECnet/DAP performance is greatly affected by record size.

In addition, when large amounts of data transfers using DFS nearly saturate the server CPU, DFS will demonstrate a greater performance advantage over DECnet/DAP for data of small record size, due to the DFS caching and offloading strategy that distributes loads evenly between clients and server. For example, for RMS record I/O sequential READ in the MicroVAX II/RD-MicroVAX II/RA client-server configuration, DFS is 443% faster than DECnet/DAP for the record size of 512 bytes at heavy load, as compared to the aforementioned light load 267% difference. Recall that, as the number of users increases, the per-user throughput for both DFS and DECnet/DAP will drop. The 443% difference was derived from the per-user throughput.

The use of data cache in the server is very important to DFS performance. When demanding fast access to a remote shared file frequently accessed by multiple users, it may be desirable to tune the client RMS multiblock count, multibuffer count and server data cache. ▲ Refer to the *VAX Distributed File Service Management Guide* for more client multiblock count, multibuffer count and server cache management information.

Using DFS to access a remote file can easily generate a substantial load on the network, a consequence when large amounts of data transfers are made over the network. When the network is experiencing heavy load due to large DFS traffic, expect to see slower response time since network load does affect performance of products such as DFS that rely on the network for data transfer. The slower response time is a consequence of increased network load, not limitation of DFS capacity.

Disk I/O time is often a performance bottleneck to many products. To prevent disks from becoming a bottleneck, distribute DFS load over disks as evenly as possible to avoid individual disk bottlenecks.

In summary, DFS file access is significantly faster than DECnet/DAP for frequent sequential file transfers of small record size. In fact, the smaller the record size, the more performance gain DFS will have over DECnet/DAP. In choosing a configuration to satisfy performance requirements, it is important to take into account both CPU and communication controller types, since a powerful CPU type alone does not guarantee good performance. We also suggested a way to estimate the number of users that can be supported by DFS for a given configuration. It depends on the minimum performance requirements and the average percentage of active users who may be using DFS to access remote files at the same time.

A summary of DFS efficiency points follows:

- Disable the checksum function after the network displays no errors.
- Determine the major bottleneck in the DFS network.
- Spread the workload of DFS evenly over the DFS Server I/O disks.
- Estimate the number of users that can be supported by a specific DFS configuration.
- DFS Caching and offloading strategy (distributing loads evenly between clients and servers).
- Keep the record size of DFS-mounted files under 8,192 bytes for maximum performance.

DECdns

The DECdns product provides a means of assigning unique names to network resources (disks, systems, and applications) so that a network application or network user can find resources within the network. Once an application has named a resource using DECdns, the name is available for all users of the application. Users can move from one system to the next and refer to application resources by the same name.

The collection of names in the DECdns database is called a namespace. A namespace is located on VMS nodes where the DECdns server software is installed. The DECdns software refers to the named resources in namespace as objects. Each object name refers to a specific entity. Associated with every object is a set of attributes describing properties of an object. An application reads object attributes for information such as a network node address or object status.

The DECdns clerk, which is located on every VMS system, receives application requests from the DECdns clerk system service. This system service allows an application to register a resource in the namespace and then access the resource from any point in the network by a single name. All applications designed to take advantage of the DECdns software must use either the DECdns clerk system service or the DECdns run-time routines to register, modify, or find information in the DECdns database.

Performance Considerations

The primary objective of the DECdns performance testing was to measure the response time and CPU load on both client and server for READ and ADD operations. Another objective was to provide the formulas to predict the response time and server CPU time, which should help in determining the DECdns hardware and software configuration.

DECdns performance is best characterized by the following metrics:

- Overall response time — The elapsed time for a particular name service clerk call to be performed. The response time can be characterized as a function of the client and nameserver CPU time, disk I/O speed, and DECnet line speed.
- Server CPU time — The CPU overhead encountered by the system on which the name server resides. This CPU time includes the CPU time consumed by the TA, BACKGROUND and ADVER processes, as well as the CPU time consumed by the other supporting processes; such as, RMS, DECnet, and job control.
- Client CPU time — The CPU overhead encountered by the system on which the clerk resides for a particular name service clerk call to be performed.

Test Environment

All tests were performed in a standalone environment with the processors and communication lines idle except for the tests being run. The following table lists the hardware used in the test configurations. The following figure describes the test configuration, while the table lists the hardware configurations.

DECdns Test Configuration

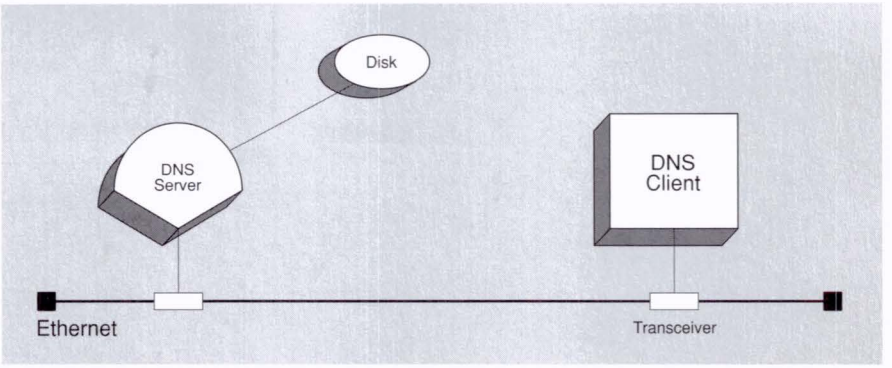

TBG-132-00

Hardware Configurations

Set-Up Number	Nameserver	Client	Disk for Database
1	Micro VAX-II	MicroVAX-II	RD53
2	Micro VAX-II	MicroVAX-II	RA81
3	VAX 3600	MicroVAX-II	RA82
4	VAX 3600	VAX 3600	RA82

The clerk and server nodes were connected by means of a private Ethernet. All server and client systems were dedicated for performance testing.

Performance Results

It was observed that while the clerk and server run on the MicroVAX-II machines, the response time (the elapsed time of clerk-server-clerk communication) for a random attribute lookup is 54.16 ms for the case of server cache hit (no disk I/O) and the server CPU time is 30.25 ms.

For the case of server cache miss, the response time is increased by 42.11 ms for each disk I/O (RA81) and the server CPU time is increased by 6.76 ms. For the same configuration, the response time of adding an attribute (for example, DECnet node address) is 280.89 ms and server CPU time is 193.43 ms when the database has a 1,000 objects and RMS buffer count is set to 127. The following two figures show the response time and server CPU time of READ and ADD operations for different configurations.

Response Time of READ and ADD Operations

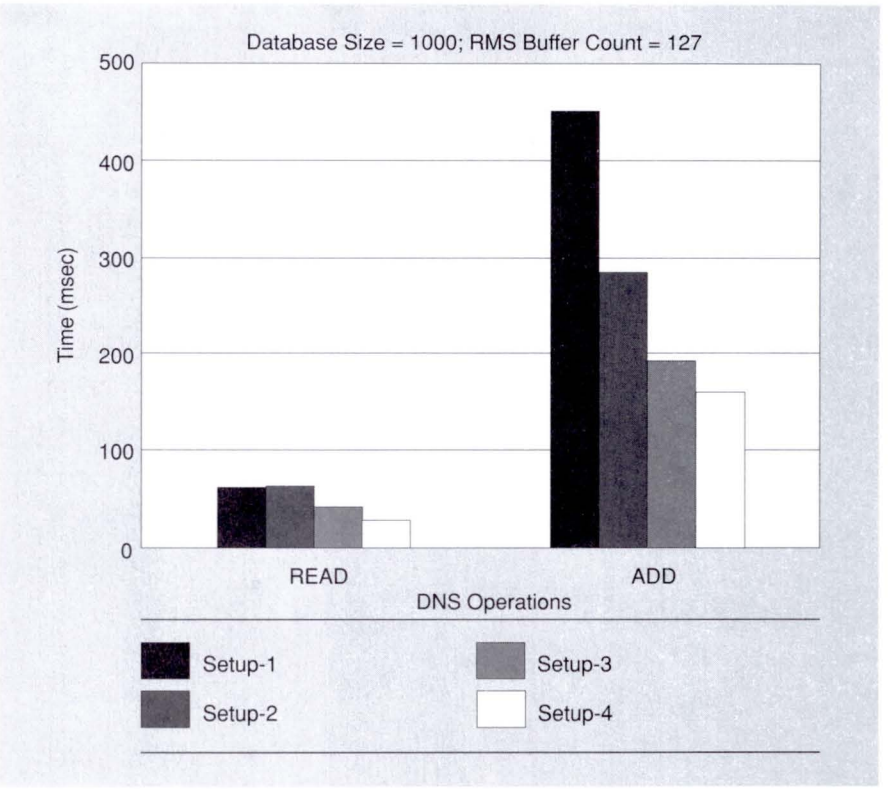

TBG-133-00

Server CPU Time of READ and ADD Operations

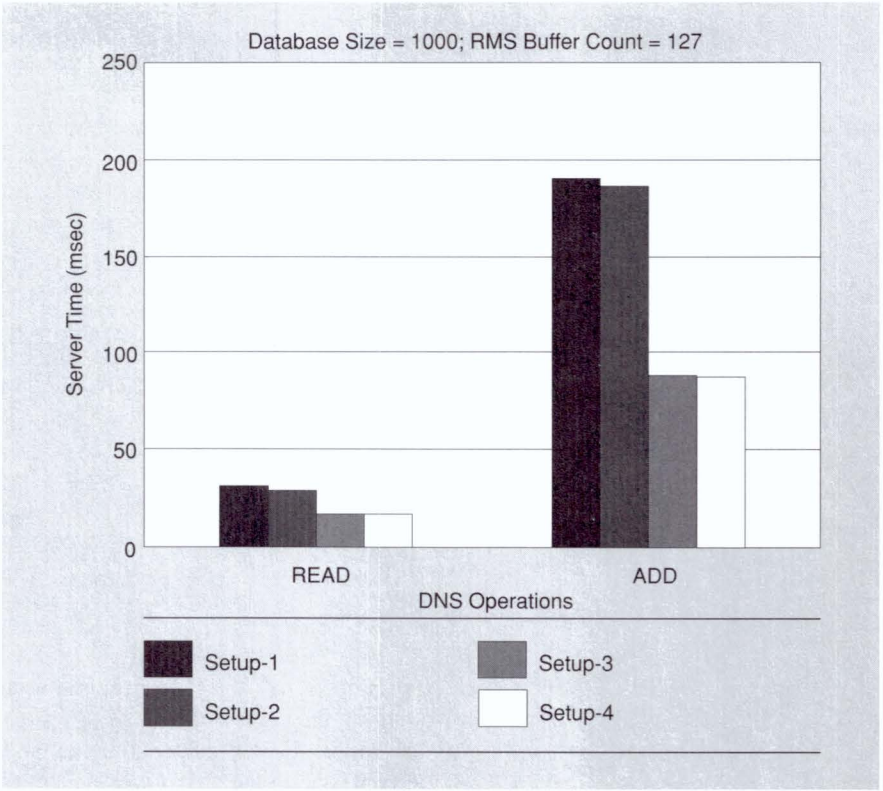

TBG-134-00

The following figure shows the curves of the response time versus RMS buffer count for two different disk types (RA81 and RD53).

Response Time vs RMS Buffer Count

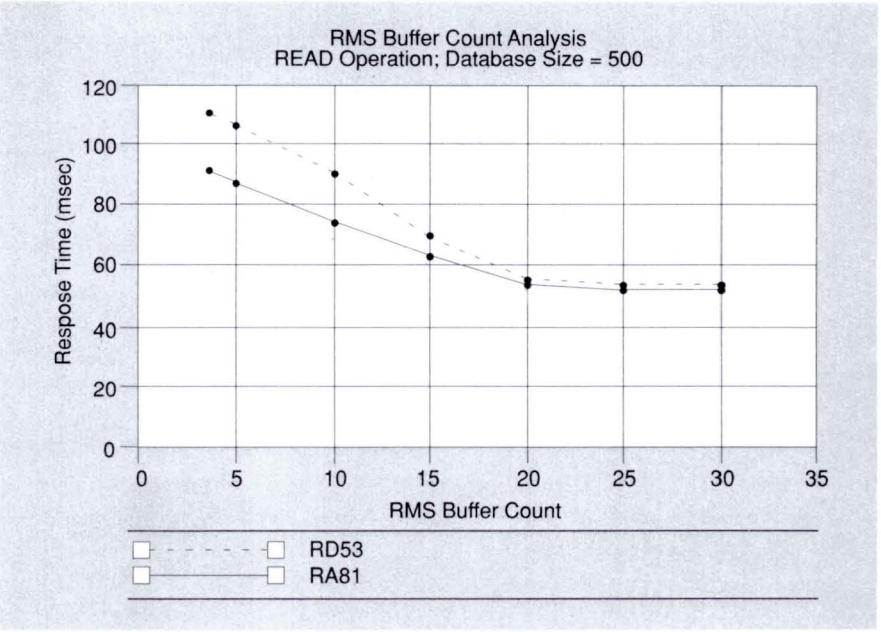

TBG-135-00

It was noted that the response time was approximately linear with the RMS buffer count, in the region of 3 to 23 (the sum of data bucket and index bucket) for both disk setups. From this phenomenon and test result, the following formulas were derived to give the approximate response time and server CPU time for READ operation.

$$\text{Response Time} = \left(\begin{array}{c}\text{Response Time}\\ \text{of Cache Hit}\end{array} + \begin{array}{c}\text{Probability of}\\ \text{Cache Miss}\end{array}\right) \times \begin{array}{c}\text{Time per}\\ \text{disk I/O}\end{array}$$

$$= T1 + \frac{N1 - (N2 - N3)}{N1} \times 42.11 \times \frac{1}{R}$$

$$\text{Server CPU Time} = T2 + \frac{N1 - (N2 - N3)}{N1} \times 6.76$$

where T1: Response time of cache hit (no disk I/O)
T2: Server CPU time of cache hit (no disk I/O)
N1: Number of data bucket
N2: RMS buffer count
N3: Number of index bucket
R: Ratio of disk I/O speed relative to RA81

N1 and N3 can be determined by invoking the RMS analyze program. Enter the following at the DCL prompt:

```
ANALYZE/RMS/STATISTICS/OUTPUT= filename.DAT clearinghouse_filename.typ
```

From output file (filename.DAT above), number of data bucket can be calculated by (if both keys are used):

No. of Data Bucket (N1) =

$$\frac{\text{Count of Data Blocks for Key \#0}}{\text{Bucket Size for Area Descriptor \#0}} + \frac{\text{Count of Data Blocks for Key \#1}}{\text{Bucket Size for Area Descriptor \#1}}$$

No. of Index Bucket (N3) =

$$\frac{\text{Count of Index Blocks for Key \#0}}{\text{Bucket Size for Area Descriptor \#0}} + \frac{\text{Count of Index Blocks for Key \#1}}{\text{Bucket Size for Area Descriptor \#1}}$$

From the test results, the response time (T1) and server CPU time (T2) of cache hit for different configurations are listed below:

Response Time and Server Time Configurations

Server CPU	Client CPU	Response Time (T1)	Server CPU Time (T2)
Micro-VAX–II	MicroVAX-II	54.16 msec	28.66 msec
VAX-3600	MicroVAX-II	38.95 msec	11.88 msec
VAX-3600	VAX-3600	23.87 msec	11.88 msec

Moreover, the server throughput can be approximately calculated as follows: it is assumed the maximum server CPU utilization is 75%.

Server Throughput = (1 ÷ Server CPU Time) × 75%

= 750 ÷ Server CPU Time (msec)

The server CPU time can also be derived from the above formula.

Example: In the current system, client and server run on MicroVAX-II and clearinghouse is created on an RA81, Database size = 500 objects, RMS Buffer Count = 15 and RMS bucket size is 32 blocks.

By using RMS ANALYZE, the number of data bucket and index bucket are 20 and 1 (only key #0 is used in this case).

By using formulas:

Resp. Time = 54.16 + [20 – (15 – 1)] ÷ 20 × 42.11 × 1 = 66.79 msec

The response time from testing is 65.80 msec
Error Rate = 66.79 – 65.80/65.80 = 1.51%

Server CPU Time = 28.66 + [20 – (15 – 1)] ÷ 20 × 6.76 = 30.69 msec

The server CPU time from testing is 30.74 msec
Error Rate = 30.74 – 30.69 ÷ 30.74 = 0.17%

Moreover, the server throughput can be approximately calculated as follows:

It is assumed the maximum server CPU utilization is 75%.

Server Throughput = (1 ÷ Server CPU Time) × 75%

= 750 ÷ Server CPU Time (msec)

The server CPU time can also be derived from the above formula. The test results of DECdns performance in wide area networks show the server CPU time is the same for processing either LAN requests or WAN requests. But for the WAN requests, the overall response time was increased by the router processing overhead and the request/response transmission delay on a synchronous line. It was observed that the router processing overhead is 4.28 msec, which is four times the CPU processing time of the DECrouter 2000. The request/response transmission delay can be calculated as follows:

$$\text{Total transmission delay} = \frac{\text{request packet size}}{\text{line speed}} + \frac{\text{response packet size}}{\text{line speed}}$$

Conclusions

Because the typical DECdns environment consists of a large number of clients accessing a single nameserver, the performance primarily depends on the following characteristics of the server:

- CPU performance — affected by the speed of the processor.
- Disk performance — determined by access time and transfer rate.
- Probability of cache hit/miss — depends on the database size and number of RMS buffer.

It was noted that for READ operations these factors play the same role on the overall performance. But for ADD operations the probability of cache hit and disk performance are the crucial factors affecting the DECdns performance. Thus, if the database is large (more than 1,000 objects) and it is modified frequently, using a faster disk is much more important than using a faster CPU server in order to improve the overall performance. The following table summarizes the crucial factors affecting DECdns performance for different cases.

Critical Factors on DECdns Performance

DECdns Operations	Small database (100 objects)	Large database (1,000 objects)
READ	Server CPU	Server CPU, disk
ADD	Server CPU, disk	Disk

In conclusion, DECdns performance can be enhanced by caching both index and data buckets and by increasing the RMS buffers. Another solution for time-sensitive environments would be to use a faster disk (for example, using RA disk instead of RD disk).

DEC ACCESSWORKS

Many factors can influence performance — load on the target database, gateway channel traffic, database design, and method of accessing the target database. The best results are obtained when a system is balanced, that is, when the database is tuned and the main storage area is distributed over several disks.

Performance numbers for the DEC ACCESSWORKS servers are given using a Data Store database of 100,000 records and assumes a response time of under two seconds. They do not account for remote database access time.

Performance for previously extracted data = "Deferred Mode."

DEC ACCESSWORKS Model No.	Number of Users	Requests/sec	Limiting factor
3130	70	58	CPU
3180	120	98	CPU
4300	100	81	CPU
4500	175	162	CPU
6610	256	252	CPU

A good rule of thumb is that each VUP is capable of serving ten requests per second, so long as no I/O or memory bottleneck is reached.

Bisync Emulators

These performance measurements show test results for several Bisync Emulators. The purpose of these tests was to produce a set of results on a typical configuration for each of these bisync emulators. These results can then be extrapolated to other systems to allow the user to estimate the capabilities of these emulators on different configurations.

Bisync terminal emulators have traditionally been positioned as low-performance and high-functionality; that is, performance was not an issue.

3270 Terminal Emulation

Issues for 3270 Terminal Emulation are:

- Number of terminals supported on a single system
- Incremental response time
- Line speed
- CPU load

The following configuration was used to test the VAX 3271 protocol emulator: VAX-11/780, VMS V3.4, and a 9.6 Kb/s synchronous line using a modem eliminator. Note that 9.6 Kb/s is the highest line speed that offers the greatest throughput, but also has the highest impact (CPU cycles) on the VAX system. Two rates of data entry were used: a typical software engineering environment, and a worst case simulation using the Auto-Repeat feature of the VT100.

For the typical software engineering environment, the protocol emulator and the first terminal used 10% of the CPU. Each subsequent terminal used an additional 5% of the CPU. When the Auto-Repeat mode of the VT100 was used for simulating worst case data entry, the protocol emulator and one terminal required 25% of the CPU. (Each additional terminal required another 6%.)

As far as response time is concerned, the test results do not add significant incremental delay to what the IBM host system imposes.

These figures can be extrapolated to other configurations to give a general idea of typical performance capabilities — that is, a VAX-11/750 increases the VAX-11/780 figures by a factor of approximately 1.5, and the VAX-11/730 increases the VAX-11/780 figures by a factor of approximately 3.

The following configuration was used to test the RSX 3271 Protocol Emulator: PDP-11/70, RSX-11M (no extended memory support), and a 9.6 Kb/s synchronous line using a modem eliminator.

Two rates of data entry were used: a typical software engineering environment and a worst-case simulation using the Auto-Repeat feature of the VT100.

For the typical software engineering environment, the protocol emulator and the first terminal used 10% of the CPU. Each subsequent terminal used an additional 5% of the CPU. When the Auto-Repeat mode of the VT100 was used for simulating worst-case data entry, the protocol emulator and one terminal required 15% of the CPU. (Each additional terminal required another 10%.)

The CPU use on the RSX-11M configuration is somewhat lower than on the VAX configuration because the VAX terminal emulation utility runs in compatibility mode.

2780/3780 Protocol Emulation

Issues for 2780/3780 protocol emulation are:

- Throughput (number of records transferred per unit of time)
- CPU load
- Line speed

The 2780/3780 protocol emulator includes many different options for translating and manipulating records: use of space compression, transparency or non-transparency, 2780 or 3780, fixed- or variable-length records, and so on. Because of the variety of options for record translation and manipulation, it is difficult to present any conclusive results.

Typically, a 9.6 Kb/s line on a VAX-11/750 with a DUP11 device uses about 10% of the CPU. Lower line speeds will result in decreased CPU use. In addition, using a DMF32 device on a VAX instead of the DUP11 decreases the CPU use by about 1.5.

Typically, a 9.6 Kb/s line using a modem eliminator on a PDP-11/70 also uses about 10% of the CPU. As is to be expected, CPU use will increase on processors smaller than those tested.

For example, the results for the VAX-11/750 configuration (10% CPU usage) can be extrapolated to 20% CPU use for the VAX-11/730. The results for the PDP-11/70 configuration (10% CPU use) can be extrapolated to 20% CPU use for the PDP-11/34 and 14% for the PDP-11/44.

On the other hand, CPU use will decrease on processors larger than those tested. For example, the results for the VAX-11/750 configuration (10% CPU use) can be extrapolated to 7% CPU use for the VAX-11/780.

Data Transfer Facility (DTF) V3.0

The Data Transfer Facility (DTF) V3.0 is a layered software application that allows bulk data transfer between a VAX VMS system and an IBM MVS system. The VMS DTF server and the VMS DTF client reside on the VAX VMS system and communicate with DTF for MVS on the IBM system through either a Gateway Access Server (GAS) on the DECnet SNA Gateway or through VMS SNA.

The results presented here are a summary of the maximum observed throughputs results for the minimum record size (80 bytes) and for the optimum record size (8,187 bytes).

The data below represent the maximum throughput observed for the DTF V3.0. The numbers are based on an RU Size of 8,192, Pacing Size 8, Network Block Count 16, and Record Sizes of 80 bytes and 8,187 bytes respectively. No translation was specified in the server definition.

DTF for MVS Maximum Throughput				
Direction	**Record Size**	**Throughput (Kb/s)**	**VAX CPU (%)**	**G-way CPU (%)**
Inbound	80	1,142	37.39	27.4
Outbound	80	1,329	50.32	29
Inbound	8,187	1,982	33.33	43.6
Outbound	8,187	2,258	53.75	34
DTF for VM Maximum Throughput				
Inbound	80	1,864	61.9	45.7
Outbound	80	1,971	76.0	42.9
Inbound	8,187	1,816	31.2	40.8
Outbound	8,187	2,187	37.3	33.2

In the preceding table we can see that for 80 byte records DTF for VM yields significantly higher throughput (63%) inbound and (48%) outbound over DTF for MVS, although it uses approximately 25% less of the VAX CPU than DTF for MVS does to complete the same file transfers.

When looking at the preceding table for the 8,187 byte records, DTF for MVS has approximately 8% greater throughput for inbound transfers and 3% greater throughput for outbound transfers. For the larger record size the VAX and Gateway CPU usages are approximately equal except in the outbound transfer on DTF for MVS, which uses 16% more of the VAX CPU than DTF for VM.

Average Throughput Test Results

These tables represent the average throughput observed for the DTF V3.0. The numbers are based on an RU Size of 8,192, Pacing Size 8, and Network Block Count 16.

Local, Remote, and No Translation – Character translation refers to the translation of characters from ASCII to EBCDIC or EBCDIC to ASCII. Character translation was performed to measure how the CPUs are affected by this extra operation per character.

In the follwoing tables we can see the effects of the location of translation and running without character translation.

In the first table we can compare the effects of the various translation schemes with 80 byte and 8187 byte records running against DTF for MVS. Here we can see that Local translation uses the greatest amount of VAX CPU. Using Remote translation drops the VAX CPU consumption between 4% and 12% depending on the record size. Finally, doing file transfers without data translation drops the VAX CPU usage approximately 10% compared to Remote and approximately 13% compared to Local translation.

DTF for MVS					
Direction	**Transla-tion**	**Record Size**	**Through-put (Kb/s)**	**VAX CPU (%)**	**G-way CPU (%)**
Inbound	None	80	1,088	37.52	26.8
Outbound	None	80	1,268	52.58	28.4
Inbound	Remote	80	1,096	46.58	27.3
Outbound	Remote	80	1,261	62.06	27.6
Inbound	Local	80	1,086	49.82	27.7
Outbound	Local	80	1,255	66.04	27.6
Inbound	None	132	1,051	30.52	25.7
Outbound	None	132	1,209	42.32	25.9
Inbound	Remote	132	1,038	36.65	25.2
Outbound	Remote	132	1,209	50.05	25.1
Inbound	Local	132	1,044	41.01	25
Outbound	Local	132	1,211	53.13	25.4
Inbound	None	1,000	1,069	19.37	19.8
Outbound	None	1,000	1,204	23.25	22.3
Inbound	Remote	1,000	1,065	25.50	20.2
Outbound	Remote	1,000	1,202	30.12	22.9
Inbound	Local	1,000	1,069	28.85	21.8
Outbound	Local	1,000	1,213	34.00	22.0
Inbound	None	4,000	1,352	23.62	28.6
Outbound	None	4,000	1,512	27.83	26.6
Inbound	Remote	4,000	1,349	31.17	29.2
Outbound	Remote	4,000	1,519	36.13	26.3
Inbound	Local	4,000	1,350	35.14	29.0
Outbound	Local	4,000	1,514	41.30	26.7
Inbound	None	8,000	1,902	33.70	43.8
Outbound	None	8,000	2,076	38.40	35.0
Inbound	Remote	8,000	1,911	44.00	43.7
Outbound	Remote	8,000	2,078	50.30	34.7
Inbound	Local	8,000	1,908	56.72	43.3
Outbound	Local	8,000	2,078	49.05	35.0
Inbound	None	8,187	1,886	33.10	43.9
Outbound	None	8,187	2,103	38.03	34.4
Inbound	Remote	8,187	1,874	43.56	43.1
Outbound	Remote	8,187	2,091	50.04	34.8
Inbound	Local	8,187	1,887	48.92	43.3
Outbound	Local	8,187	2,097	55.92	34.3

In the table below we can compare the effect of the various translation schemes with 80 byte and 8,187 byte records running against DTF for VM. Here we can see that Local translation uses the greatest amount of VAX CPU. Using Remote translation drops the VAX CPU consumption approximately 2% and 8% depending on the record size. Finally, doing file transfers without data translation drops the VAX CPU usage approximately 13% compared to Remote and approximately 18% compared to Local translation.

DTF for VM					
Direction	**Transla-tion**	**Record Size**	**Through-put (Kb/s)**	**VAX CPU (%)**	**G-way CPU (%)**
Inbound	None	80	1,755	62.9	44.6
Outbound	None	80	1,808	76.6	42.6
Inbound	Remote	80	1,751	78.0	45.6
Outbound	Remote	80	1,755	88.8	42.0
Inbound	Local	80	1,695	80.9	42.3
Outbound	Local	80	1,638	93.5	36.5
Inbound	None	8,187	1,729	30.7	39.2
Outbound	None	8,187	2,050	37.7	33.2
Inbound	Remote	8,187	1,679	40.2	39.2
Outbound	Remote	8,187	2,053	50.1	33.5
Inbound	Local	8,187	1,722	45.1	38.6
Outbound	Local	8,187	2,053	56.3	33.8

Description of Experiments

Parameter Values of the DTF	
Parameter	**Proposed Value**
Num. IOBUF	9
IOBUF size	1,024 bytes
(Gateway) Receive Buffers	512
Transfer mode	Block Mode
Block Buffer size	8,250 bytes
RMS Block Count	64
Network Block Count	16

The Gateway-CT must be attached to the VM VTAM or MVS VTAM. The Gateway software was V2.0 BL5.

The VM DTFGCS, DTFCMS, and DTFVTAM machines must be private for the test person. That will guarantee that the IBM CPU numbers are a measure of only the one transfer going through.

For MVS and VM VTAMs, internal VTAM tracing has been turned off on startup of VTAM.

The VTAM parameter for IOBUF was increased for 1,040 to 1,280.

The DELAY parameter on the PU definition is reduced from the default of 0.2 to 0.1.

The ESATEST system for MVS has NETVIEW and NETMASTER active, but the tracing was turned off.

The configurations for the testing are shown here.

Test Configuration

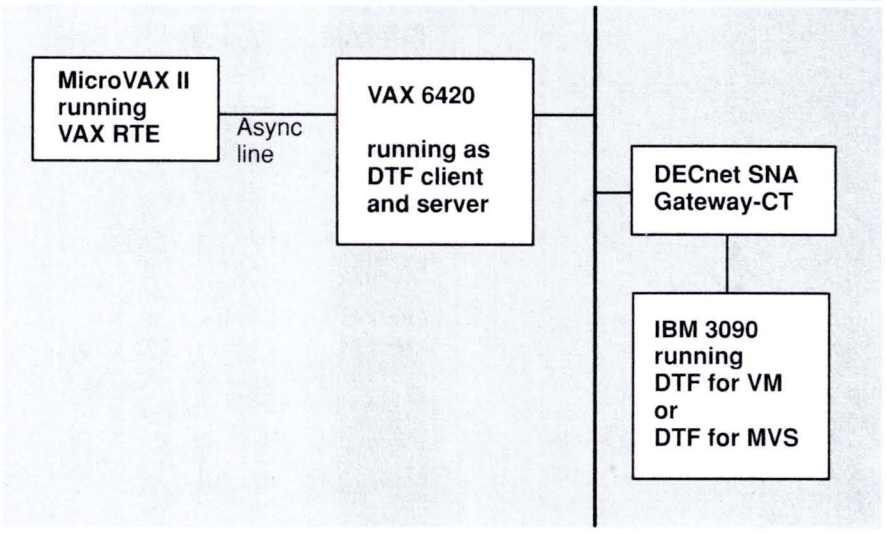

DECnet Internet Gateway

The DECnet Internet Gateway file transfer capabilities were measured by transferring files of 1 block to 1000 blocks between two VAX 8800s as hosts with a MicroVAX 3600 as a DECnet-Internet Gateway. The significant metrics are the throughput, response time, CPU utilization, and session limit. The highest observed throughput for Internet users was 1.18 Mb/s (total) for three users pulling 1,000 block files from a DECnet node. The highest observed throughput for DECnet users was 668 Kb/s (total) for three users pushing 1,000 block files to an Internet host.

Thirty-five sessions were established and sustained through the MicroVAX 3600 Gateway, but due to unacceptable throughput, no more than 18 sessions on a CPU of this type are recommended.

Configuration and Methods

The following figure shows the test configuration. Each VAX 8800 was used to simulate single and multiple DECnet or Internet users. A background process was used to measure the CPU utilization of the network processes. The MicroVAX 3600 had 16 MB of memory and used an RA82 as system disk and a DELQA Ethernet device. The DECnet-VAX node was running VMS V5.2. Output measurements were taken with an HP LAN Analyzer 4971A.

Single/Multiple DECnet or Internet Configuration

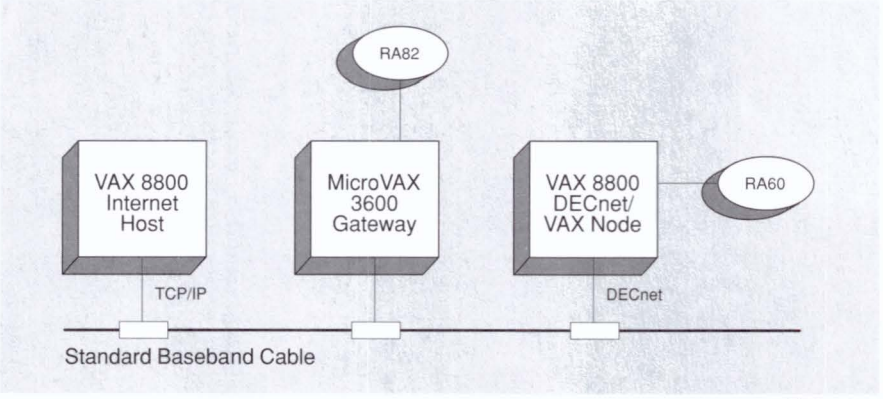

TBG-145-00

To avoid extraneous input to the data, each host/node was running only the software necessary for the experiments and the network included only the machines necessary for the work.

The following two tables list the throughput and DECnet-Internet Gateway CPU utilization for one and three users for DECnet to Internet and Internet to DECnet file transfers (pushing the file to the remote system).

Throughput and CPU Utilization: VAX 8800 Node → MicroVAX 3600 Gateway → VAX 8800 Host DECnet-to-Internet

File Size	Response Time (sec)	Throughput (bits/sec)	% Gateway CPU Utility
One User:			
1	1.4	2,925	27.2
100	2.0	204,800	46.4
500	4.4	465,454	72.7
1,000	7.4	553,513	81.7
Three Users:			
1	1.2	3,413	85.5
100	2.8	146,285	95.1
500	9.8	208.979	97.0
1,000	18.4	222,608	97.8

Throughput and CPU Utilization: VAX 8800 Host → MicroVAX 3600 Gateway → VAX 8800 Node Internet-to-DECnet

File Size	Response Time (sec)	Throughput (bits/sec)	% Gateway CPU Utility
One User:			
1	1.0	4,096	10.5
100	1.0	409,600	44.0
500	3.6	568,888	50.7
1,000	6.0	682,666	59.3
Three Users:			
1	3.6	1,137	7.9
100	3.6	128,000	40.8
500	6.4	320,000	84.7
1,000	13.2	310,303	76.4

Conclusions

- For experimental purposes, high-end systems and a MicroVAX-based Gateway were used. If the DECnet-Internet Gateway will be used heavily, the use of a small system as the Gateway should be avoided since throughput will be degraded.
- The maximum number of sessions on a Gateway is bounded by the following: the DECnet parameter EXECUTOR MAXIMUM LINKS; the CPU power of the Gateway; and the relative CPU power of the end systems that will use the Gateway. The maximum number of sessions recommended for a MicroVAX 3600 with 16 MB of memory is 18 sessions.
- For the most part the applications in use determine the record size of the files, but when possible users should use larger record sizes when transferring large files. Larger record sizes result in shorter response times per file. The difference is minimal so there will be no perceptible difference when transferring average files.

Internet Portal V1.0

The Internet Portal has two basic functions: encapsulation and decapsulation of Internet packets.

An Internet packet transmitted by an Internet host on NI1 destined for a host on NI2 is encapsulated by the Internet Portal on NI1 sent through the DECrouter pair to the Internet Portal on NI2, to be decapsulated and forwarded to the destination Internet host.

The Internet Portal V1.0 can process over 1,200 64-byte IP packets-per-second (pps) in this configuration.

Because the router was the bottleneck in the above network, a second configuration was also tested. All systems were on the same physical LAN. There were two logical Internet networks and a DECnet backbone network. The two portals composed the DECnet network.

Metrics

The metrics of importance here are the packet throughput and the packet service time. The throughput is defined as the number of packets-per-second (pps) sent by a host on one network and received by a host on the other network. The packet service time is the number of milliseconds between a portal receiving a packet from the NI and the processed packet being sent out again on the NI.

Configuration

The experiments were conducted using two DECstation 3100 Portals. A number of VAX 8800 systems and MicroVAX systems were used as Internet hosts. The routers were DECrouter 2000s connected by a 2-MB synchronous line. The Internet hosts were configured two different ways: first, they were configured to generate traffic that would be received and dropped by the receiving hosts, creating one-way SINK traffic. Second, they were configured to generate traffic that would be received and returned to the sender creating symmetric two-way ECHO traffic. High-throughput experiments were designed to boundary test the system and locate the bottleneck of the network. Low-throughput experiments were designed to track packets through the network using a LAN analyzer to determine the packet service time.

The same experiments were conducted on a network without the DECrouter 2000s.

Throughput

The throughput was measured with packets varying from 32 bytes to 1,024 bytes. The following table lists the maximum throughput under different configurations in packets-per-second.

Maximum Throughput in Packets-per-Second (pps)	
Configuration	**Throughput**
With DECrouter 2000s:	
Sink test – 64-byte packet	1,219 pps
Echo test – 64-byte packet	1,010 pps
Without DECrouter 2000s:	
Sink test – 32-byte packet	1,571 pps
Echo test – 32-byte packet	1,478 pps

Packet Service Time

The packet service time was measured for both encapsulation and decapsulation functions in both sink and echo tests, using the same packet sizes for the throughput testing. The following table lists the average packet processing time for packets under 574 bytes at the IP routing level (that is, 520 bytes user data plus 20-byte IP header plus 34-byte DECnet header). Packets larger than 574 bytes are segmented into two or more packets before encapsulation.

Average Packet Processing Time in Milliseconds		
Test	**Encapsulation**	**Decapsulation**
Sink	0.777 ms	0.980 ms
Echo	0.820 ms	1.004 ms

For packets larger than 574 bytes, the packet will be segmented by the encapsulating portal and reassembled by the destination host. The decapsulating portal does not reassemble the packet.

Recommendations

Packet segmentation is a time-consuming process; the best throughput will be seen when the packets are less than 574 bytes at the IP routing level.

Environmental Specifications



This section contains the following topics:

Environmental Specifications	**C-1**

Appendix C

Environmental Specifications

The environmental information provided in this appendix will help you plan for installation when ordering products. Detailed site preparation information is provided in the individual site preparation guide for the specific products.

Hardware products are classified and tested according to one of the classes of temperature/humidity environments shown in the following table.

Environmental Classes

Class	Temperature	Relative Humidity	Maximum Wet Bulb	Minimum Dew Point
A	15°C to 32°C (59°F to 90°F)	20% to 80%	25°C (77°F)	2°C (36°F)
B	10°C to 40°C (50°F to 104°F)	10% to 90%	28°C (82°F)	2°C (36°F)
C	5°C to 50°C (41°F to 122°F)	10% to 95%	32°C (90°F)	2°C (36°F)

Related Documentation



This section contains the following topics:

Documentation Order Codes	D-1
The Cost of Network Ownership	D-4
Network Troubleshooting Guide	D-5

The following table lists documentation related to networking.

Documentation Order Codes	
Document	**Order Code**
Telecommunications and Networks Handbooks	
Introduction to RSX-11 P.S.I.	AA-M369B-TC
Introduction to VAX-11 P.S.I.	AA-L0670C-TE
Architecture Specifications (Order through DECdirect)	
DECnet DNA Ethernet Data Link Functional Specification V1.0	AA-Y298A-TK
DECnet DNA Ethernet Node Product Architecture Specification V1.0	AA-X440A-TK
DECnet DNA Phase IV General Description	AA-N149A-TC
DECnet DNA Maintenance Operations Functional Specification V3.0	AA-X436A-TK
DECnet DNA Network Management Functional Specification V4.0	AA-X437A-TK
DECnet DNA NSP Functional Specification V4.0	AA-X439A-TK
DECnet DNA Routing Layer Functional Specification V2.0	AA-X435A-TK
DNA Phase V General Description	AA-DNAPV-GD
DECnet DNA, Ethernet Node Architecture Specification V2.0	AA-K759B-TK
OPEN DECconnect System Documentation	
DECconnect System Fiber Optic Installation	EK-DECSY-FI
DECconnect System Fiber Optic Planning and Configuration	EK-DECSY-FP
DECconnect System Illustrated Parts Breakdown	EK-DECON-IP
DECconnect System Requirement Handbook	EK-DECSY-EG
OPEN DECconnect Building Wiring Components and Applications Catalog	EC-I1834-29

Documentation Order Codes (Continued)

Document	Order Code
Unshielded Twisted-Pair Configuration Manuals	
Unshielded Twisted-Pair Ethernet Installation Guide	EK-TPEIG-IN
Unshielded Twisted-Pair Ethernet Wiring Certification Guide	EK-TPEWC-IN
FDDI Documentation	
FDDI Networking, Digital's Next Generation of High-speed LAN Solutions	EC-F0542-42
Digital's DECconcentrator 500, Dependable High-Performance Network Connectivity	EC-F1421-42
The DECbridge 500 and DECbridge 600 Series, Digital's Comprehensive Family of Network Interconnect Products	EC-F1256-42
Digital's DEC FDDIcontroller 400, 100 Megabits-per-second Network Connectivity for VAX Systems	EC-F1305-42
FDDIcontroller 700/700C Networks Controllers (Information Sheet)	EC-F1581-42
Digital Technical Journal, Fiber Distributed Data Interface, Spring 1991	EY-H876E-DP
A Primer to FDDI: Fiber Distributed Data Interface	EC-H0750-42
FDDI System Level Description	EK-DFSLD-SD
FDDI Network Configuration Guidelines	EK-DFDDI-CG
Additional Documents	
The ADVANTAGE-NETWORKS Family	EC-F1735-42
Bridge Family (Information Sheet)	EC-F0439-42
Corporate Backbone Networks Pocket Reference Guide	EE-EM030-42
DECnet Systems Services Overview	EK-DSS01-OV
DECrepeater 200 (Information Sheet)	EC-F0399-42
DEC WANrouter 100 and WANrouter 500	EC-F1307-42
DEC WANrouter 150 and WANrouter 250	EC-F1327-42
Digital Equipment Corporation Reference Service	ED-23800-18
DECbridge 90 (Information Sheet)	EC-F1178-29
DEChub 90 (Information Sheet)	EC-F1180-29

Documentation Order Codes (Continued)	
Document	**Order Code**
Additional Documents (Continued)	
Digital Industrial Networks Guidebook	EC-G0802-70
Digital's IBM Interconnect Solutions Family	EC-F1597-42
DECrepeater 90T/90C (Information Sheet)	EC-F1181-29
DECserver 300 Terminal Server (Information Sheet)	EC-F0230-42
Digital's 802.3/Ethernet Communications Server Family	EC-F1721-42
DECserver 700 Ethernet Communications Server (Information Sheet)	EC-F1659-42
DECserver 90L (Information Sheet)	EC-F1179-29
Ethernet Enhanced Security System (Data Sheet)	ED-29716-42
InfoServer 150 (Information Sheet)	EC-F1496-29
InfoServer Client for DOS (Information Sheet)	EC-F1498-29
InfoServer Client for VMS (Information Sheet)	EC-F1499-29
InfoServer Client for VXT (Information Sheet)	EC-F1544-29
PATHWORKS for DOS (InfoServer) (Information Sheet)	EC-F1497-29
The MAILbus Advantage: An Open Network Solution for All Desktops (Information Sheet)	EC-F0667-42
VAXcluster Network Configuration Brochure	EJ-31399-68
PDP-11 Systems and Options Catalog	ED-32702-41
PDP-11 20th Anniversary Systems and Options Catalog Supplement	EC-I0411-41
PDP-11 Systems Handbook	EB-29317-41
Routing and Networking Overview	AA-HS15A-TK
3270 Terminal Option Card (CXM04) (Information Sheet)	EC-F0824-42
VAX Systems/DECsystems Systems and Options Catalog	EC-I1640-46
Network Troubleshooting Guide	EK-339AB-GD
NAS Handbook: Developing Applications in a Multivendor Environment	EC-H0477-48
DECmcc Strategic Vendor Program	EC-F0683-42
Solutions for Enterprise Management	EC-F0762-42
DECmcc Director	EC-F0766-42
DECelms User Manual	AA-PAK2A-TE

Documentation Order Codes (Continued)	
Document	**Order Code**
Magazine Reprints	
Dispelling Some Common Myths About ANSI's FDDI-2	EB-Y0808-42
"Implementing and Managing FDDI Networks"	EF-A1300-50
"FDDI LAN Magazine Products 1990 Report"	EF-A1301-50
"Getting More Fiber: Healthy Considerations"	EF-A1302-50
"FDDI Gives LANs New 100 Mbps Backbone"	EF-A1303-50
"Preparing for FDDI"	EC-Y0276-42
"Networking: A Strategic Advantage in Today's Global Marketplace"	EC-Y0659-42
"Hot Products: Two Stacks are Better Than One"	EC-Y0381-42
"The Integrated IS-IS Routing Protocol"	EB-Y0809-42

All OPEN DECconnect products are described in the *OPEN DECconnect Building Wiring Components and Applications Catalog* (Order Number EB-M4506-78). This catalog provides information that includes the following:

- Descriptions of all OPEN DECconnect components and selected active networking equipment
- An explanation of the OPEN DECconnect architecture
- Tips for designing with structured horizontal wiring
- Media specifications, standards requirements, and data rates
- Integration of OPEN DECconnect and pre-EIA/TIA-568 wiring
- Cable connection tables
- Detailed wiring requirement diagrams by application
- End-to-end pin/pairing diagrams for most applications

The Cost of Network Ownership

This 70-page comprehensive report summarizes the cost of network ownership case studies conducted by an information technology management consulting firm. The research report discusses the approach taken, describes the cost model, and presents the key findings and conclusions of the study commissioned by Digital. The report presents 17 case studies of American and European networks, of which there were three types:

- Corporate
- Multiple field office
- Manufacturing site

Also, two appendices include detailed information of an IBM and Digital case analysis. The following are report excerpts:

- "On average, only one-third of the 5-year ownership costs are related to the acquisition of the networks, while nearly two-thirds of the costs are for operations and routine change."
- "Personnel costs account for 25% of the 5-year costs."

- "The average per-port cost of centralized corporate networks is more than double that of distributed networks."
- "Among the corporate networks on which the model was tested, average personnel costs were lower for Digital networks than for IBM networks."

To obtain *The Cost of Network Ownership* (EJ-32929-42), consult your local sales representative.

Network Troubleshooting Guide

The Network Troubleshooting Guide helps customers keep their networks running smoothly in two ways: first, it provides a systematic approach to solving any network problem; second, it gives specific step-by-step instructions for solving some of the most common network problems that occur with DECnet VAX, DECnet ULTRIX, Ethernet, and TCP/IP networks.

The Network Troubleshooting Guide incorporates information from various sources into a single manual — minimizing the documentation required for solving network problems. Using *The Network Troubleshooting Guide*, junior network managers can reliably solve common problems, freeing senior network managers to perform more specialized network management tasks.

The Network Troubleshooting Guide covers

- What a network environment is
- How to use a standard troubleshooting methodology to solve any network problem
- How to use network tools such as the Network Control Program (NCP), NMCC/DECnet Monitor, NMCC/VAX Ethernim, and LAN Traffic Monitor (LTM)
- How to use ULTRIX commands such as netstat, ping, and userf
- How to use log files and counters to gather information for problem solving
- How to trace a network path to isolate the source of a problem
- How and when to perform loopback tests
- In explicit step-by-step instructions, how to solve nearly 30 of the most common network problems, including:
  - Network partner exited
  - Host unknown
  - Permission denied
  - Login information invalid
  - Circuit state problems
  - LAN segment communication problems
  - Babbling devices

The Network Troubleshooting Guide (EK-339AB-GD) is available through DECdirect (1-800-DIGITAL).

802.3 An IEEE standard describing the physical and data link layers of a local area network based on bus topology and CSMA/CD.

802.5 An IEEE standard describing the physical and data link layers of a local area network based on ring topology and medium access control (MAC) protocol.

ac watts drawn ac current (watts) drawn by the option at 120 V, 60 Hz or 240 V, 50 Hz.

algorithm A set of rules for accomplishing a task. A repeated sequence of steps that a device or program executes to accomplish the task for which it was designed.

American Wire Gauge (AWG) A standard for describing the size of a wire. The gauge varies inversely with the actual wire diameter.

baseband LAN A LAN that transmits all data at the same frequency over a single channel (and still provides high-speed transfers).

bit The smallest quantity of data processing information. A bit can assume the values of 0 or 1, only.

bps Bits per second., a measure of transmission speed. *See* line speed.

b/s Bits per second.

BISYNC Binary synchronous protocol, a system that IBM developed for transmitting data over synchronous data communications facilities.

bit transfer rate The number of bits transferred in a unit of time, usually expressed in bits per second (bps).

bridge An active device used to join two Ethernet LANs, creating an extended LAN. The bridge is a specialized store-and-forward and packet filtering station that synchronizes traffic between LANs and isolates local traffic.

broadband A communication channel having a great bandwidth, and therefore capable of multiple, parallel high-speed transmissions.

broadband network A type of network that uses multiple carrier frequencies to transmit signals on a single cable.

bus A local area network topology in which all stations attach to a single transmission medium so that all stations are equal and hear all transmissions on the medium.

bus loads The number of bus loads drawn from the appropriate system bus.

byte A unit of data consisting of eight bits.

cable concentrator A device that converts several individual cables to a larger, single cable without loss of signal information.

channel The data path between two or more stations, including the communications control capability of the associated stations.

coaxial cable An electrical cable in which a piece of wire is surrounded by insulation and then surrounded by a tubular piece of metal who axis of curvature coincides with the center of the piece of wire, hence the term "coaxial." Two examples are standard Ethernet cable and ThinWire Ethernet cable.

collision The event when two nodes in a network try to transmit at the same time on the same channel, causing the transmitted data to be unusable.

collision detect
A signal provided by the Physical layer to the Data Link layer on an Ethernet/IEEE 802.3 node indicating that one or more stations are contending with the local station's transmission.

communications controller
A device within a computer that enables LAN communication.

communications servers
Special-purpose, standalone systems dedicated to managing communications activities for other computer systems.

concentrator
An intelligent multiplexer that has more storage capacity than most other types of multiplexers and performs more complex functions. A concentrator reduces the number of physical communications links between two points by logically multiplexing the links. An example is a terminal server.

crosstalk
Noise passed between elements of a communications cable or device.

CSMA/CD
Carrier Sense Multiple Access with Collision Detection, a method of having multiple stations access a transmission medium (multiple access) by listening until no signals are detected (carrier sense), then transmitting and checking to see if more than one signal is present (collision detection).

data link
A logical connection between two stations on the same circuit on which data integrity is maintained.

data link layer
The second layer in the International Organization for Standardization model for open systems interconnection (ISO/OSI). It implements a medium independent link-level communication facility on top of the Physical layer.

dc amps drawn
dc current (amps) drawn by the option at 5 V, 15 V, – 15 V, 12 V.

DDCMP
Digital Data Communications Message Protocol. In this data link layer protocol, message headers contain a character count indicating the size of the message.

DECnet
Digital networking software that runs on nodes in both local and wide area networks. An implementation of DNA (Digital Network Architecture). DECnet provides many standard applications for accessing files and databases that exist on other nodes.

device
A specific name for a disk or diskette that is currently storing data files.

distributed processing
A technology that enables the distribution of computing power and storage facilities to user work areas such as offices, labs, or desks on factory floors.

direct memory access (DMA)
A device that permits I/O transfers directly into and out of CPU memory.

Digital Network Architecture (DNA)
Digital's layered data communications protocols. A division of activities into layers, required to perform network communications. DNA is compatible with the internationally accepted OSI model.

double slot
Space in a prewired backplane that accepts a 13.2 cm (5.22 in) high module.

Ethernet
A local area network that employs coaxial cable as a passive communications medium in a Carrier Sense Multiple Access with Collision Detection (CSMA/CD) system to interconnect different types of computers, server products, and office equipment at a local site.

end node
A node that can only send and receive information for its own use. An end node cannot receive and then forward information intended for another node. Your personal computer is an end node.

extended LAN
A network composed of multiple standard Ethernet LANs joined by bridges. Up to seven bridges can separate stations.

fiber optic cable
A glass filament cable that is used to transmit digital signals in the form of light.

file server
A computer system equipped with disks or tapes and a program that permits network users to create and store files on the disks or tapes.

file specification
A complete file identification including an option drive name and path name. The file specification must include at least a file name followed by an optional file type and version number.

firmware
Programs kept in semipermanent storage such as various types of read-only memory; such programs can be altered, but with difficulty.

framing
In transmission, the process of dividing data that is to be transmitted into groups of bits and adding a header and a check sequence to form a frame.

FTAM
File, Transfer, Access, and Management software based on the OSI reference model from the ISO. FTAM provides for copying and deleting files, and displaying information about files between ISO FTAM-compliant systems in a multivendor network.

full duplex
Simultaneous two-way independent transmission in both directions. Provides more efficient use of communications lines than half duplex.

gateway
In local area networks, a computer system and its associated software that permit two networks using different protocols to communicate with each other. A gateway translates all protocol levels from physical layer up through applications layer, and can thus be used to interconnect networks that differ in every detail.

gateway servers
Communications servers that provide access from one type of network to another (networks having different access protocols).

half duplex
Two-way transmission, but one way at a time.

hertz (Hz)
A unit of frequency equal to one cycle per second.

hex slot
Space in prewired backplane that accepts a 39.63 cm (15.6 in) high module.

host
The primary or controlling computer in a multiple computer network. A node that provides service for another node.

IEEE
The Institute of Electrical and Electronic Engineers, an information exchange, publishing, and standards-making body responsible for many standards used in local area networks, notably the 802 series.

IEEE 802.3
A standard published by the Institute of Electrical and Electronic Engineers that defines the CSMA/CD media access method and the Physical layer specifications of a network.

ISO layered model
A way of thinking about communications protocols that models them as existing in seven layers, each layer performing services for the layer above it. The seven layers (from lowest to highest) are: physical, data link, network, transport, session, presentation, and application.

I/O connection panel insert

Openings for mounting I/O connection panel inserts in the I/O connection panel on the back of the CPU cabinet. These inserts provide the transition between internal cabling and external shielded cabling. There are two types of I/O connection panel inserts — one for UNIBUS systems and one for Q-bus systems.

I/O connection panel inserts for UNIBUS options vary in type and style depending on the amount and type of connectors required by the option. Each I/O connection panel accepts multiple inserts. Q-bus options have I/O connection panel insert sizes of A (2.54 × 10.1 cm or 1 × 4 in), B (6.6 × 8.1 cm or 2.6 × 3.2 in), or C (10.1 × 10.1 cm or 4 × 4 in).

Kb/s

Kilobits per second (K = 1,000).

KB/s

Kilobytes per second (K = 1,024).

LAT

An abbreviation for local area transport.

layer

In networks, layers pertain to the software protocol levels that make up the architecture. Each layer performs certain functions for the layers above it.

line speed

Maximum rate at which data can be reliably transmitted over a line. Rate varies with the modem or hardware device that does the transmitting. Generally line speed is expressed in bits per second (b/s).

load balancing

Is the ability of a system to bring a user job or request to the least loaded resource (of a group of resources providing similar services).

local area network (LAN)

A privately owned data communications system that offers high-speed communications channels optimized for connecting information processing equipment. Geographical area is usually limited to a building or group of buildings.

local network interconnect (DELNI)

A concentrator, standalone or attached to standard Ethernet cable, that supports up to eight active devices (except DEREPs) or communications controllers.

logical link

A temporary connection between source and destination nodes (or between two processes on the same node).

loopback connector

A hardware device that temporarily connects the output portion of a circuit back to the input portion of a circuit for the purpose of testing communication lines.

METROWAVE bridge

A bridge that uses microwave links to interconnect standard Ethernet LANs.

Mb/s

Megabits per second (1 Mbit = 1,000,000 bits).

MB/s

Megabytes per second (M = 1,048,578).

modified modular jack (MMJ)

A jack used for connecting data cables to a faceplate.

modular jack (MJ)

A jack used for connecting voice cables to a faceplate.

mode

The measure of central tendency that corresponds to the most frequently occurring value or measurement in a distribution.

modem

A hardware device capable of changing communications signals from digital to analog and back to digital.

multiport repeater (DEMPR)

A repeater, standalone or connected to standard Ethernet cable, that interconnects up to eight ThinWire Ethernet segments.

multiplex

To use a common physical channel to transmit two or more data streams, simultaneously or nearly simultaneously.

multiplexer A communications device that allows several users to share a single circuit. It funnels the data streams of several users into a single stream. Another multiplexer at the other end of the link splits the stream back into the original streams, forwarding them to their intended destinations (such as user terminals).

network A group of computers or systems that are connected together and can communicate with each other to share resources and information.

network management The administrative services needed to mange a network, such as configuring and tuning the network software, monitoring network performance, maintaining network operation, and diagnosing and troubleshooting network problems.

network performance The way a network performs, measured against the expectations or requirements of users, customers, designers, and/or implementors, or as claimed by sales and marketing personnel. The criteria for network performance include such parameters as throughput, response time, and resource utilization.

node Any intelligent device that communicates with other devices in the network.

Open System Interconnect (OSI) The internationally accepted framework of standards for intersystem communication. Developed by the International Standards Organization (ISO), OSI is a seven-layer model that covers all aspects of information exchange between systems. Digital's DNA is compatible with OSI. *See* DNA.

physical address A single-destination address, which identifies a single station.

Physical layer The lowest layer of the International Organization for Standardization model for open systems interconnection (ISO/OSI). It is implemented by the physical channel using a specified medium. The Physical layer insulates the Data Link layer from medium-dependent physical characteristics such as baseband, broadband, or fiber-optic technologies.

plenum grade Cable that is UL-certified for installation without conduits in environmental airspaces.

point-to-point A point-to-point link is a circuit that connects two nodes only. A point-to-point configuration requires a separate physical connection between each pair of nodes.

port The physical connector on a faceplate or active device that enables a connection to be made.

polyvinyl chloride (PVC) The standard coating used on cables. PVC is not UL-certified for installation in environmental airspace.

protocols Rules or formats that operating systems must follow to conduct effective communications with other computer in a network.

quad slot Space in prewired backplane that accepts a 26.51 cm (10.44 in) high module.

repeater A bi-directional device that amplifies or resynchronizes signals into standard voltages, currents, and timing.

ring A local area network topology in which each station is connected to two other stations, this process being repeated until a loop is formed. Data are transmitted from station to station around the loop, always in the same direction.

router A DECnet node that can receive messages and information from one node and forward them to another node.

router servers — Communications servers which offload routing functions from other nodes in a network.

segment — A length of standard Ethernet or ThinWire Ethernet coaxial cable made up of one or more cable sections.

server — A hardware and software module or device that performs a specific, well-defined service for many users, such as terminal I/O handling (terminal server) or remote file access.

SLIP — Symmetric List Processor, a high-level list processing language.

SNA — Systems Network Architecture, IBM's layered communications protocols.

spanning tree — The logical topology created by bridges through the spanning tree computation process. The spanning tree connects all the segments while ensuring that there is only one path between any two stations.

standard Ethernet cable — A 1/2-inch cable, available with PVC or plenum-grade outer jacket, supporting Ethernet communications and providing high immunity to electrical noise.

standard Ethernet LAN — An Ethernet network composed of standard Ethernet cable as opposed to ThinWire Ethernet cable.

station adapter (DESTA) — A transceiver for ThinWire Ethernet LANs.

system unit space — Space in chassis for mounting prewired backplane(s) that accepts hex- or quad-sized modules.

TCP/IP — An abbreviation of transmission control protocol/internet protocol, generally used to refer to the ARPA internet protocols associated with the UNIX operating system.

Telnet protocol — A network virtual terminal that permits all terminals on the network to provide a similar interface to processes in any host. This allows the use of any terminal supported by the network with any host system on the network even if that host could not support the particular terminal through its standard terminal controller.

terminal server — A terminal concentrator that controls communication between terminals and hosts, freeing hosts from performing this function.

terminator — A special connector, used on both ends of a standard Ethernet or ThinWire Ethernet segment. that provides the 50-ohm termination resistance needed for the cable.

ThinWire Ethernet cable — A flexible, inexpensive cable supporting Ethernet communications and consisting of a 50-ohm solid center conductor, foam dielectric, foil shield, braid, and outer covering (either PVC or plenum-grade).

throughput — The measure of how much data is sent, or can be sent, between two points in a specified unit of time.

token — A special frame that controls the right to transmit the FDDI ring. Each node has a timer that controls how long the node can hold the token.

topology — The physical shape or arrangement of nodes and connecting hardware that makes up the network.

transceiver — A device that provides a single physical connection between standard Ethernet or ThinWire Ethernet LANs and active devices or communication controllers.

transceiver cable — A cable used to attach a device either to a standard Ethernet segment or to a DESTA connected to a ThinWire Ethernet segment.

TransLAN bridge — A bridge that uses remote communications media to connect remote LANs.

twisted-pair cable — An inexpensive, multiple-conductor cable used in low-speed communications, similar to a telephone cable. Because of its narrow bandwidth, it is used only in a baseband network.

wide area network (WAN) — A public or private data communications system that spans a large geographical area, with nodes distributed in several cities or countries.

window — A rectangular section of your screen which is used for running programs or applications.

wiring concentrator — An FDDI node that provides additional attachment points for stations that are not part of the dual ring, or for other concentrators in a tree structure.

X.25 Gateway Access Protocol — In DECnet, a protocol which allows a node that is not directly connected to a public data network to access facilities of that network through an intermediary gateway node. X.25 is the protocol standard for communication in packet-switched data networks.

X.400 — A CCITT recommendation for a message handling system. Generally used by public and some private mail networks.

Numbers

4100+ Bridging Router Base Systems, 5-41
802.3/Ethernet
  advantages, 2-9
  applications, 2-10
    CAD/CAM, 2-12
    factory, 2-11
    hospital, 2-13
    laboratory, 2-15
    office, 2-10
    university, 2-16
  DEC EtherWORKS Network Interface Cards, 6-48
  products, 2-17
    baseband IEEE transceiver, 2-19
    fiber optic cable, 2-25
    fiber optic connectors, 2-25
    Local Network Interconnect, 2-20
    office transceiver cable, 2-26
    standard 802.3/Ethernet, 2-28
      802.3/Ethernet turnaround connectors, 2-29
      barrel connectors, 2-28
      terminators, 2-28
    standard baseband 802.3/Ethernet cable, 2-24
    ThinWire 802.3/Ethernet cable, 2-27
    transceiver cable, 2-25
802.3/Ethernet Communications Routers
  TransPATH 335, 2-179
  TransPATH 350, 2-179
802.3/Ethernet configuration guidelines
  802.3/Ethernet-based products, A-6
  broadband 802.3/Ethernet LAN, A-33
  connecting an 802.3/Ethernet LAN to remote networks, A-40
  connecting baseband to broadband LANs, A-36
  connecting shared resources to an 802.3/Ethernet LAN, A-38
  converting from Phase III to Phase IV, A-4
  DECnet to IBM SNA communications, A-47
  DNA Phase IV, A-1
  extended baseband 802.3/Ethernet LAN, A-26
  extended broadband 802.3/Ethernet LAN, A-35
  Phase IV network terms, A-1
  ThinWire 802.3/Ethernet LAN, A-21
  unshielded twisted-pair 802.3 LAN, A-18
802.3/Ethernet Gateways, 5-65
802.3/Ethernet LAN, planning, A-9
802.3/Ethernet system controllers, 2-82
  DEC LAN Controller 200 (DEBNI), 2-83
  DEC TRNcontroller 100, 2-88
  DELQA, 2-85
  DELUA, 2-84
  DESQA, 2-86
  DESVA, 2-87
802.3/Ethernet–based products, baseband 802.3/Ethernet LAN, A-9
802.3/Ethernet-based products, A-6
802.5/Token Ring
  Overview, 5-31
  products
    bridging routers, 5-41, 5-48
    controllers, 5-35, 5-36, 5-37, 5-38
    media filters, 5-39, 5-40
    multistation access units, 5-53
    power supplies, 5-56, 5-57, 5-58
    workgroup wire center, 5-55
  SNMP/Token Ring Proxy Agent, 8-35
  TokenVIEW Plus, 8-34
802.5/Token Ring Controller, 2-79

A

Access modules, 8-11
ADVANTAGE-NETWORKS, 1-1, 1-6
Alfalfa POSTE, X.400 MAIL User Agent, 7-91
ALL–IN–1
  Desktop Integration, 7-81
  DESKtop Server for VMS, 7-82
  MAIL. *See* DEC MAILworks
  Personal Assistant, 7-80
  STARTER, 7-85
ALL–IN–1 Integrated Office System (IOS)
  Desktop Integration, 7-81
  DESKtop Server for VMS, 7-82
  MOBILIZER, 7-85
  Personal Assistant, 7-80
  Server for VMS, 7-78
  STARTER, 7-85
ALL-IN-1 DESKtop Server for VMS, 7-84
Application Programming Interface (API), 8-5

B

Baseband 802.3/Ethernet LAN, planning
  802.3/Ethernet LAN and connected processor, A-12
  connecting servers, A-16

connectors and terminators, A-10
DELNI connected configuration, A-16
DELNI hierarchical standalone configuration, A-15
DELNI standalone configuration, A-14
fiber optic cables, A-10
IEEE 802.3/Ethernet repeaters, A-12
Local Network Interconnect (DELNI), A-14
planning the physical channel layout, A-9
standard 802.3/Ethernet cable, A-9
segment using barrel connectors, A-9
standard baseband Ethernet distance guidelines, A-16
ThinWire 802.3/Ethernet cable, A-11
tranceivers and transceiver cable, A-11
unshielded twisted-pair cable, A-11
Baseband IEEE 802.3/Ethernet Transceiver (H4005), 2-19
Binary synchronous communications protocol emulators, 5-120
RSX-11M/RSX-11M-PLUS RJE/HASP Emulator, 5-122
VAX 2780/3780 Protocol Emulator, 5-120
VAX 3271 Protocol Emulator, 5-121
Bisync Emulator performance guidelines, B-33
2780/3780 protocol emulation, B-34
3270 terminal emulation, B-33
Bridges, 2-7, 2-91
DECbridge 500, 3-26
DECbridge 600, 3-26
DECbridge 90, 2-91, 2-92
LAN Bridge 150, 2-7, 2-91, 2-94
LAN Bridge 200, 2-7, 2-91, 2-98
METROWAVE, 2-91, 2-100
METROWAVE 150, 2-100
METROWAVE 200, 2-100
TransLAN, 2-91, 2-104
TransLAN 320, 2-104
TransLAN 335, 2-104
TransLAN 350, 2-104
TransLAN III, 2-104
Broadband 802.3/Ethernet cabling, 2-4
Broadband 802.3/Ethernet LAN
distance guidelines and configurations, A-33
dual-cable network distance guidelines, A-34
planning, A-33
single-cable network distance guidelines, A-34
Business Communications
TeamRoute, 7-19
VOICEmail for VAX VMS Systems, 7-26
Business communications, 7-14
DEC Computer Integrated Telephony Applications Interface for VMS, 7-24
Server 100/500 (CITSR 100/500), 7-23
Server for VMS (CITSR), 7-22
DEC VTX, 7-16
FAX Network Gateway, 7-14
VAX Notes, 7-14
VICfax, 7-14

C

Cables
broadband, 2-4, 2-58
broadband 802.3/Ethernet cabling, 2-4
communications cables, 4-65
fiber optic, 2-25
office transceiver, 2-26
plenum-rated, 2-24
PVC-insulated coaxial, 2-24
shielded twisted-pair cabling (IBM), 2-56
standard baseband 802.3/Ethernet cable, 2-3, 2-24
standard thick wire coaxial cabling, 2-58
structured vs unstructured, 2-48
ThinWire 802.3/Ethernet cabling, 2-4, 2-56
transceiver, 2-25
unshielded twisted-pair cabling, 2-55
Carrier Sense (CS), 2-1
Carrier Sense Multiple Access with Collision Detection (CSMA/CD), 2-1
CNX 500 Bridging Router Base Systems, 5-48
Collision Detection (CD), 2-2
Communications cables, 4-65
Communications Controllers, 2-79, 4-2
802.3/Ethernet controllers, 4-2
802.5/Token Ring Controller, 2-79
asynchronous, 4-2
IEEE 802.3/Ethernet communications controllers, 2-5
MicroVAX 2000, 4-39
DHT32, 4-40
DHW41-AA, 4-45
DHW42-AA, 4-45
DSH32, 4-42
DST32, 4-41
DSW41-AA, 4-44
DSW42-AA, 4-44

Q-bus, 4-16
CX, 4-18
DEC ISDNcontroller 100, 4-31
DHF11, 4-20
DHQ11, 4-22
DLVJ1, 4-25
DMV11, 4-34
DPV11, 4-26
DSV11, 4-27
DZQ11, 4-30
KMV1A, 4-36
synchronous, 4-2
system controllers, 2-79
TURBOchannel, DEC WANcontroller 720, 4-14
VAXBI, 4-4
DEC WANcontroller 220, 4-10
DEC WANcontroller 620, 4-12
DHB32, 4-5
DMB32, 4-7
Communications Processors, 4-47
KXJ11-CA, 4-48
KXT11-AB, 4-47
KXT11-CA, 4-47
Connecting an 802.3/Ethernet LAN to remote networks, A-40
DECnet to DECnet routing, A-41
Connecting an 802.3/Ethernet LAN to remote systems
configuration using a DECrouter 2000, A-43
DEC X25router 2000, A-45
configuration, A-46
DECnet to X.25 communications, A-44
DECrouter 2000, A-41
Digital to multivendor communications over X.25 networks, A-47
host system routers, A-41
host-based system connections to X.25 networks, A-45
Connecting baseband to broadband LANs, A-36
fiber optic bridge configuration guidelines, A-37
standard bridge configuration guidelines, A-37
Connecting shared resources to an 802.3/Ethernet LAN, A-38
802.3/Ethernet LAN configuration using terminal servers, A-39
802.3/Ethernet LAN with many terminals per host, A-38
DECnet host system software, A-40
host systems, A-39, A-40
terminals, A-38
Controllers
See also Communications Controllers
802.3/Ethernet system controllers, 2-82
Converting from Phase III to Phase IV, A-4
802.3/Ethernet-based Phase IV network, A-5
typical Phase III network, A-4
Courses in networking, 9-4
CX Communications Controllers, 4-18
CXA16, 4-18
CXB16, 4-18
CXY08, 4-18

D

Data Service Unit/Channel Service (DSU/CSU), 4-62
Data Transfer Facility (DTF)
average throughput test results, B-35
description of experiments, B-37
maximum throughput for MVS, B-35
maximum throughput for VM, B-35
performance guidelines, B-34
DE201, 2-32
DEBAM, 2-98
DEBET, 2-94
DEBNA, 2-82
DEBNI, 2-83
DEC ACCESSWORKS, 2-134
DEC ACCESSWORKS performance guidelines, B-32
DEC ChannelServer II, 5-66
DEC Commserver (DSPAA/DSPAB), 2-130
DEC Computer Integrated Telephony
Applications Interface for VMS, 7-24
Server 100/500 (CITSR 100/500), 7-23
Server for VMS (CITSR), 7-22
DEC EtherWORKS Network Interface Cards, 6-48
DEC EtherWORKS Turbo/TP, 2-32
DEC FDDIcontroller 400, 3-47
DEC FDDIcontroller 700, 3-43
DEC FDDIcontroller 700-C, 3-43
DEC FDDIcontroller/EISA, 3-41
DEC ISDNcontroller 100, 4-31
DEC ISDNrouter 100, 2-178
DEC LAN Controller 200 (DEBNI), 2-83
DEC MAILworks, 7-64
for DOS, 7-73
for Macintosh, 7-75
for Video Terminals, 7-77

for VMS DECwindows, 7-77
for Windows, 7-72
Server, 7-68
DEC MicroServer, 2-163
DEC MicroServer-SP, 2-155
DEC RdbAccess for VAX RMS on VMS, 5-114
DEC Security Report Facility, 8-45
DEC SNA 3270 Application Services, 5-73
DEC SNA Domain Gateway for Channel Transport, 5-70
DEC TCP/IP Services for VMS, 5-27
DEC TRNcontroller 100, 2-88, 5-35
DEC VTX, 7-16
DEC WANcontroller 220, 4-10
DEC WANcontroller 620, 4-12
DEC WANcontroller 720, 4-14
DEC WANrouter 250, 2-159
DEC WANrouter 500, 2-163
DEC X.25 Access for ULTRIX, 5-136
DEC X25gateway 100, 2-156
DEC X25gateway 100/500, 5-131
DEC X25gateway 500, 2-166
DEC X25router, performance guidelines, B-14
DEC X25router 100, 2-158
DEC X25router 2000, 2-169, 5-131
DECagent 90, 2-74
DECathena services, 9-3
DECbridge 500, 3-26, A-55
DECbridge 600, 3-26, A-55
DECbridge 90, 2-92
DECconcentrator 500, 3-8, A-51
concentrator-to-FDDI connection requirements, A-54
DECdns, 7-7
conclusions, B-30
configuration, 7-7
peformance results, B-25
performance considerations, B-24
performance guidelines, B-24
response time and server time configuration, B-29
response time of READ and ADD operations, B-26
response time vs RMS buffer count, B-28
server CPU time of READ and ADD operations, B-27
test configuration, B-25
test environment, B-24
DECelms, 2-91, 2-98, 8-17
DEChub 90, 2-73
DECinspect, 8-41
DECinspect Compliance Manager
for SunOS, 8-42
for ULTRIX, 8-42
for VMS, 8-41
DECinspect Intrusion Detector for VMS, 8-44
DECmcc
Basic Management System, 8-6
Developer's Toolkit, 8-13
Director, 8-6
Enterprise Management Station for VMS, 8-6
Extended LAN Manager, 8-20
Management Station for ULTRIX, 8-15
option packages, 8-6
WANdesigner, 8-31
DECmessageQ Message Bus, 7-8
DECmodem V32 Modem, 4-59
DECmodem V32 Rackmount, 4-61
DECnet communications performance guidelines
DECnet RSX, B-2
PATHWORKS for DOS, B-5
PATHWORKS for OS/2, B-8
DECnet Communications Software
DECnet for OS/2, 5-22
DECnet for SCO UNIX, 5-20
DECnet OSI for ULTRIX, 5-17
DECnet OSI for VMS, 5-13
FTAM, 5-13
OSAK, 5-13
PSI access, 5-13
VOTS, 5-13
VT, 5-13
WAN device drivers, 5-13
DECnet with VAXELN, 5-15
DECnet/E, 5-24
DECnet-DOS, 5-22
DECnet-RSX, 5-21
DECnet-RT, 5-24
DECnet VAX, 5-10
Extensions, 5-11
FTAM, 5-11
OSAK, 5-11
PSI access, 5-11
VOTS, 5-11
WAN device drivers, 5-11
product capabilities, 5-8
DECnet for OS/2, 5-22

DECnet for SCO UNIX, 5-20
DECnet Internet Gateway
configuration and methods, B-39
performance guidelines, B-39
single/multiple DECnet or Internet configuration, B-39
throughput and CPU utilization, B-40
DECnet OSI for ULTRIX, 5-17
DECnet OSI for VMS, 5-13
FTAM, 5-13
OSAK, 5-13
PSI access, 5-13
VOTS, 5-13
VT, 5-13
WAN device drivers, 5-13
DECnet RSX, 5-21, B-2
effects of multibuffering on bit rate, B-2
equal-cost load splitting, B-4
file transfers, B-3
routing nodes, B-4
throughput data, B-2
throughput with equal-cost load splitting, B-5
DECnet SNA Gateway
configuration, A-47
for Channel Transport, 5-68
for Synchronous Transport, 5-74
Management Utilities, 5-77
DECnet System Services, 7-2
DECdns, 7-7, B-24
DECmessageQ Message Bus, 7-8
Distributed File Service, B-18
performance guidelines, B-18
Remote System Manager, 7-11
VAX Distributed File Service, 7-3
VAX Distributed Queueing Service, 7-5
DECnet to IBM SNA communications, A-47
DECnet SNA access routines and programming interfaces, 5-88, A-47
DECnet SNA Gateway configuration, A-47
DECnet with VAXELN, 5-15
DECnet/E, 5-24
DECnet/PCSA Client for DOS performance guidelines
conclusion, B-8
file transfer, B-6
task-to-task communications, B-7
DECnet SNA access routines and programming interfaces, 5-88, A-47
DEC RdbAccess for VAX RMS on VMS, 5-114
DECwindows DECnet SNA 3270 Terminal Emulator
for ULTRIX (DW ULTRIX 3270 TE), 5-97
for VMS (DW VMS 3270 TE), 5-95
Message Router/P Gateway (for IBM PROFS), 5-90
Message Router/S Gateway (for IBM SNADS), 5-90
SQL Access Server for Rdb/VMS, 5-115
VIDA for DB2, 5-113
DECnet SNA Data Transfer Facility (DTF), 5-101
DECnet SNA Integrated Information Access Packages, 5-104
DECnet SNA FLASH/IMS Programming Interface (FPI), 5-111, 5-112
DECnet SNA Integrated Information Access Packages, 5-104
DECnet SNA MS-DOS 3270 Terminal Emulator (MS-DOS 3270 TE), 5-93
DECnet SNA ULTRIX 3270 Data Stream Programming Interface (3270 DSPI), 5-109, 5-110
DECnet SNA ULTRIX 3270 Terminal Emulator (ULTRIX 3270 TE), 5-92
DECnet SNA ULTRIX 3270 Terminal/Print Services, 5-99
DECnet SNA VMS 3270 Terminal Emulator (VMS 3270 TE), 5-90
DECnet SNA VMS Advanced Program-to-Program Communication/LU6.2 Programming Interface (APPC), 5-108
DECnet SNA VMS Application Programming Interface (API), 5-107
DECnet SNA VMS Distributed Host Command Facility (DHCF), 5-106
DECnet SNA VMS Printer Emulator (PrE), 5-106
DECnet SNA VMS Remote Job Entry (RJE), 5-100, 5-101
DECnet-DOS, 5-22
DECnet-RT, 5-24
DECnet VAX, 5-10
Extensions, 5-11
FTAM, 5-11
OSAK, 5-11
PSI access, 5-11
VOTS, 5-11
WAN device drivers, 5-11
DECNIS 500, 2-176
DECNIS 600, 2-171
DEComni/VMS, OSI Manufacturing Network Interconnect, 5-143
DECosap/VMS, 5-144
DECrepeater 200, 2-42, 2-91
DECrepeater 350 (DETPR), 2-32

DECrepeater 90C, 2-36
DECrepeater 90T, 2-31
DECrouter 250, 2-162
  computing throughput from available routers, B-12
  computing throughput from line bandwidth, B-12
  configuration and methods, B-11
  hardware, 2-159
  line support, B-11
  performance, B-11
  performance guidelines, B-11
  test results, B-13
  test situation, B-11
DECserver 250, 2-121
DECserver 700, 2-113
DECserver 90L+, 2-119
DECserver 90TL, 2-116
DECsite, 2-71
DECwindows DECnet SNA 3270 Terminal Emulator
  for ULTRIX (DW ULTRIX 3270 TE), 5-97
  for VMS (DW VMS 3270 TE), 5-95
DELNI. *See* Baseband 802.3/Ethernet LAN, planning
DELQA, 2-85
DELUA, 2-84
DEMFA, 3-47
DEMPR, 2-38
DEMSA, 2-163
DEMSB, 2-155
DEQRA, 2-88
DEREN, 2-42
DESPR, 2-39
DESQA, 2-86
DESTA, 2-46
DESVA, 2-87
DETLB, 2-104
DETPR, 2-32
DFS. *See* VAX Distributed File Service
DHB32, 4-5
DHF11, 4-20
DHQ11, 4-22
DHT32, 4-40
DHW41-AA, 4-45
DHW42-AA, 4-45
Digital Ethernet
  Large-Scale-Integration UNIBUS Adapter (DELUA), 2-84
  Q-Bus Communications Controller (DELQA), 2-85
  Station Q-Bus Communications Controller (DESQA), 2-86
  VAXBI to NI Adapter (DEBNA), 2-82
Digital IBM Transport products
  802.3/Ethernet Gateways, 5-65
  DEC ChannelServer II, 5-66
  DEC SNA 3270 Application Services, 5-73
  DEC SNA Domain Gateway and DECnet SNA Gateway comparison, 5-64
  DEC SNA Domain Gateway for Channel Transport, 5-70
  DECnet SNA Gateway for Channel Transport, 5-68
    DEC ChannelServer II, 5-68
  DECnet SNA Gateway for Synchronous Transport, 5-74
  DECnet SNA Gateway Management utilities, 5-77
  ULTRIX SNA Server, 5-82
  VAX Business-Integrated Gateway, 5-84
  VMS SNA, 5-80
  VMS SNA and DECnet SNA Gateway comparison, 5-64
Digital Internet Communications Software, 5-25
  DEC TCP/IP Services for VMS, 5-27
  Internet Communications with VAXELN, 5-25
  ULTRIX-TCP/IP and NFS, 5-25
    LAT/Telnet Gateway, 5-26
  WIN/TCP, WIN/TCP DDN, and WIN/TCP SCI, 5-29
Digital Internet interconnect
  DECnet Internet Gateway performance guidelines, B-39
  Internet Portal, B-41
Digital Network Architecture (DNA), 1-3
Digital to IBM interconnect performance guidelines, Bisynch Emulators, B-33
Digital to IBM Transport products, 5-62
Distributed applications, 7-1
  business communications, 7-14
  DECnet System Services, 7-2
  electronic messaging, 7-31
  MAILbus, 7-34
  network personal computing, 6-1
Distributed File Service
  capacity and capacity planning, B-18
  effects of multibuffering on bit rate, B-22
  factors affecting maximum throughput, B-19
  performance, B-21

performance comparison, B-21
performance guidelines, B-18
DLVJ1, 4-25
DMB32, 4-7
DMV11, 4-34
DNA Phase IV network configuration guidelines, A-1
remote multipoint configurations and guidelines, A-2
DNS. *See* DECdns
Documentation order codes, D–1
DPV11, 4-26
DQS. *See* VAX Distributed Queueing Service
DSH32, 4-42
DSRVR, 2-159
DST32, 4-41
DSV11, 4-27
Dual Homing, A-49
DWS41-AA, 4-44
DWS42-AA, 4-44
DZQ11, 4-30

E

EASYnet, 1-7
EIA/TIA, 2-52
Commercial Building Wiring Standard, 2-48, 2-49
EIA-423 signaling, 2-58
Electronic messaging, 7-31
Enterprise Messaging Server, 7-60
MAILbus, 7-34
overview, 7-31
services, 7-48
User Agents, 7-62
X.400 model, 7-32
EMA. *See* Enterprise Management Architecture
Enterprise Integration Center (EIS), 1-3
Enterprise Management Architecture (EMA), 8-3, 8-5
Enterprise management solutions, 8-1
advanced management applications, 8-1
complete services portfolio, 8-3
DECmcc configuration, 8-4
Enterprise Management Architecture, 8-3
integrated network management, 8-1
strategic vendor relationships, 8-1
Enterprise Messaging Server, 7-60, A-63, A-65
configuration diagram, A-63
configuration table, A-66
Environmental specifications, C-1
Ethernet Enhanced Security System, 8-37
configuration requirements, 8-40
DESNC, 8-38
VAX KDC system, 8-40
EtherWORKS. *See* DEC EtherWORKS
eXcursion for Windows, 6-46
Extended baseband 802.3/Ethernet LAN
configuration and distance guidelines, A-26, A-32
fiber optic links, A-27
microwave links, A-30
mixed Spanning Tree networks, A-26
planning, A-26
Extended broadband 802.3/Ethernet LAN
planning, A-35
single cable configuration and distance guidelines, A-36
Extended Local Area Networks, 2-7

F

Faceplate, 2-59
FastPacket, 4-50
FAX Network Gateway, 7-14
FDDI, 3-1
DEC FDDIcontroller 400, 3-47
DEC FDDIcontroller 700, 3-43
DEC FDDIcontroller 700-C, 3-43
DEC FDDIcontroller/EISA, 3-41
DECconcentrator 500, 3-8
FDDI Configuration Guidelines, A-48, A-51
AUI interface, A-56
Bridge-to-802.3/Ethernet guidelines, A-56
Bridge-to-FDDI guidelines, A-55
Cabling requirements, A-59
concentrator-to-FDDI connection requirements, A-54
DECbridge 500/600, A-55
DECconcentrator 500, A-51
Dual Homing, A-49
Optical Bypass Link Loss, A-50
Optical Bypass Relay, A-49
Redundancy Capabilities, A-52
ThinWire interface, A-57
Fiber optic, 2-52
advantages, 2-52
cable, 2-25
components, 2-54
connectors, 2-25

Ethernet system products, 2-77
office transceiver cable, 2-26
OPEN DECconnect products, 2-61
structured wiring strategy, 2-53
ThinWire 802.3/Ethernet cable, 2-27
transceiver cable, 2-25
Fiber Optic IEEE 802.3/Ethernet Repeater (DEREN), 2-42
Fiber Optic Network, 2-52
File Transfer and Terminal Emulation Products, 5-146
VAX Public Access Communications (VAXPAC), 5-146
VTERM II, poly-COM 220, and poly-COM 240 for the IBM PC/XT/AT, 5-147
Frame Relay, 4-50
FTAM, 5-11, 5-13, B-15
Function modules, 8-9

H

H3350, 2-33
H4005, 2-19
HDLC framing software, 5-151
Horizontal structured wiring, 2-54
HUBwatch for DECmcc MSU, 2-74
HUBwatch for Windows, 2-74

I

IBM Interconnect, 5-116
Jnet, 5-116
Jnet BSC/370, 5-117
Jnet BSC/400, 5-117
Jnet SNA NJE, 5-119
Jnet TCP NJE, 5-118
third-party solutions, 5-116
IEEE 802.1 Spanning Tree, 2-99
IEEE 802.3/Ethernet communications controllers, 2-5
IEEE 802.3/Ethernet communications servers, 2-6
InfoServer 150, 2-139
Integrated personal computing
network, 6-2
PATHWORKS Packaged Servers, 6-24
PATHWORKS Server 3100e, 6-28
PATHWORKS Server 333, 6-26
PATHWORKS Server 433, 6-27
International Standards Organization (ISO), 1-3, 2-1
Internet Communications with VAXELN, 5-25
Internet Portal performance guidelines, B-41
average packet processing time in milliseconds, B-42
configuration, B-41
maximum throughput in packets per second, B-42
metrics, B-41
packet service time, B-42
recommendations, B-42
throughput, B-41

J

Jnet, 5-116
Jnet BSC/370, 5-117
Jnet BSC/400, 5-117
Jnet SNA NJE, 5-119
Jnet TCP NJE, 5-118

K

KMV1A, 4-36
KXJ11-CA, 4-48
KXT11-AB, 4-47
KXT11-CA, 4-47

L

LAN Bridge 150, 2-7, 2-91, 2-94
LAN Bridge 200, 2-7, 2-91, 2-98
LAN Traffic Monitor, 2-91, 8-26
LAN Traffic Monitor-Reports, 8-27
LAN-based PC applications
eXcursion for Windows, 6-46
PATHWORKS Browser for Windows, 6-43
PATHWORKS Conferencing for Windows, 6-44
PATHWORKS Desktop Backup, 6-41
PATHWORKS Links for Windows, 6-40
TeamLinks for PATHWORKS, 6-36
LAT/Telnet Gateway, 5-26
local area network (LAN), 2-1, 2-17
Local Network Interconnect (DELNI), 2-20
LTM. *See* LAN Traffic Monitor

M

MAILbus, 7-34
- Data Collector, 7-53
- DDS Rapid Replicator, 7-55
- Directory
  - Query, 7-59
  - Registrar, 7-54
  - Synchronizer, 7-57
- electronic messaging components, 7-34
- installation and configuration, 7-53
- integration services, 7-48
- Monitor, 7-55
- planning and design, 7-52
- Retix OpenServer 400, 7-45
- ULTRIX Mail Connection, 7-40
- VAX Message Router, 7-35
  - Programmer's Kit, 7-44
  - VMSmail Gateway, 7-39
  - X.400 Gateway, 7-37
- VAX Message Router/P Gateway, 7-42
- VAX Message Router/S Gateway, 7-41

MAILbus 400
- for ULTRIX, 7-87
- Message Transfer Agent (MTA), 7-89
  - Application Program Interface (API), 7-89
  - Simple Mail Transfer Protocol (SMTP), 7-89

Main Distribution Frame (MDF), 2-47, 2-50

Management products
- access modules, 8-11
- DECmcc Basic Management System, 8-6
- DECmcc Developer's Toolkit, 8-13
- DECmcc Director, 8-6
- DECmcc Enterprise Management Station for VMS, 8-6
- DECmcc Management Station for ULTRIX, 8-15
- DECmcc option packages, 8-6
- Enterprise Management Architecture (EMA), 8-5
- function modules, 8-9
- network management products, 8-15
- network security, 8-37
- presentation modules, 8-9
- SNMP/Token Ring Proxy Agent, 8-35
- TokenVIEW Plus, 8-34

Message Router/P Gateway (for IBM PROFS), 5-90

Message Router/S Gateway (for IBM SNADS), 5-90

Message Transfer Service, MAILbus, 7-34

METROWAVE 150, 2-100

METROWAVE 200, 2-100

METROWAVE Bridge, 2-91, 2-100

MicroVAX 2000, 4-39

Mixed Spanning Tree Networks, A-26

MOBILIZER for ALL–IN–1, 7-85

Modems, 4-55
- Data Service Unit/Channel Service (DSU/CSU), 4-62
- DECmodem V32, 4-59
- DECmodem V32 Rackmount, 4-61
- Multiple Modem (Rackmount) Enclosure, 4-62
- Private Leased Telecommunications Network (PLTN) Modems, 4-58
- Scholar Plus, 4-58

Multiple Access (MA), 2-2

Multiple Modem (Rackmount) Enclosure, 4-62

Multivendor network integration, 9-7

MUXserver 300/310/380/DECmux 300 Remote Terminal Server, 2-123

N

NET/MASTER, 8-33

Network
- ownership cost, D–4
- troubleshooting guide, D–5

Network configuration guidelines
- 802.3/Ethernet, A-1
- FDDI, A-48
- Messaging network topology, A-63, A-65

Network Integration Services, 2-71, 9-1
- consulting on network planning and design, 9-1
- implementing custom network solution, 9-2
- installing software, 9-8
- integrating multivendor networks, 9-7
- providing tailored network management solutions, 9-2
- training customers, 9-4

Network Management
- DECelms, 8-17
- DECmcc Extended LAN Manager, 8-20

Network personal computing
- Pacer for ULTRIX, 6-21
- PAS, 6-10
- PATHWORKS Access Solution, 6-10
- PATHWORKS Client Software, 6-4
- PATHWORKS for DOS, 6-5
- PATHWORKS for DOS (NetWare Coexistence), 6-9
- PATHWORKS for DOS (TCP/IP), 6-8
- PATHWORKS for Macintosh, 6-15
- PATHWORKS for OS/2, 6-12, 6-22
- PATHWORKS for OS/2 (TCP/IP), 6-14

PATHWORKS for ULTRIX, 6-20
PATHWORKS for VMS, 6-18
PATHWORKS for VMS (Macintosh), 6-19
PATHWORKS for Windows, 6-5
PATHWORKS Server Software, 6-17
Network Security, 2-9
DEC Security Report Facility, 8-45
DECinspect, 8-41
DECinspect Compliance Manager for SunOS, 8-42
DECinspect Compliance Manager for ULTRIX, 8-42
DECinspect Compliance Manager for VMS, 8-41
DECinspect Intrusion Detector for VMS, 8-44
Ethernet Enhanced Security System (DESNC), 8-37
NIS, 2-71
NMCC/DECnet Monitor, 8-30
NMCC/VAX ETHERnim, 8-29

O

Office Communications Cabinet (OCC), 2-51
Office transceiver cable, 2-26
Open Advantage, 1-1
OPEN DECconnect, 2-2, 2-47
communication outlets, 2-59
faceplate, 2-59
modular office wallbox, 2-59
components and features, 2-57
fiber optic network, 2-52
fiber optic structured wiring strategy, 2-53
horizontal structured wiring, 2-54
optional connectors, 2-67
daisy-chain connector tap, 2-67
video connector, 2-67
overview, 2-47
product overview, 2-50
structured wiring architecture, 2-50
administration subsystem, 2-50
building backbone subsystem, 2-50
campus backbone subsystem, 2-50
horizontal wiring subsystem, 2-50
work area wiring subsystem, 2-50
terminal connections, 2-58
terminal-connection components, 2-68
BC16E, 2-68
H3105, 2-68
H8572, 2-68
H8575-A, 2-68
H8575-B, 2-68
unshielded twisted-pair cabling, 2-55
OPEN DECconnect products, 2-61
Open Systems Interconnection (OSI), 1-3, 1-12
Open Systems Interconnection (OSI) Products, 5-139
DEComni/VMS, OSI Manufacturing Network Interconnect, 5-143
DECosap/VMS, 5-144
OSI and Government Open System Interconnection Profile (GOSIP), 5-139
OSI Application Developer's Toolkit, 5-141
VAX DEC/MAP, 5-142
Optical Bypass Relay, A-49
Optical Bypass Link Loss, A-50
OSAK, 5-11, 5-13
OSI and Government Open System Interconnection Profile (GOSIP), 5-139
OSI Application Developer's Toolkit, 5-141
OSI applications performance guidelines, FTAM, B-15
Other network management products
DECmcc WANdesigner, 8-31
LAN Traffic Monitor, 8-26
LAN Traffic Monitor-Reports, 8-27
NET/MASTER, 8-33
NMCC/DECnet Monitor, 8-30
NMCC/VAX ETHERnim, 8-29
Remote System Manager, 8-36
Terminal Server Manager, 8-17

P

Pacer for ULTRIX, 6-21
Packetnet Communications Software, 5-124
DEC X25gateway 100/500, 5-131
DEC X25router 2000, 5-131
VAX P.S.I., 5-131
VAX P.S.I. Access, 5-132
X.25 Packet Switching Support for ULTRIX, 5-135
PAS, 6-10
PATHWORKS
Access Solution, 6-10
Browser for Windows, 6-43
Client Software, 6-4
Conferencing for Windows, 6-44
Desktop Backup, 6-41

for DOS, 6-5
for DOS (NetWare Coexistence), 6-9
for DOS (TCP/IP), 6-8
for DOS performance guidelines, B-5
test configurations, B-6
for Macintosh, 6-15
for OS/2, 6-12, 6-22
for OS/2 (TCP/IP), 6-14
for OS/2 performance guidelines, B-8
conclusion, B-10
test configurations, B-8
for ULTRIX, 6-20
for VMS, 6-18
for VMS (Macintosh), 6-19
for Windows, 6-5
Links for Windows, 6-40
Packaged Servers, 6-24
Server 3100e, 6-28
Server 333, 6-26
Server 433, 6-27
Server Software, 6-17
software, 6-1
PC networking hardware, DEC EtherWORKS Network Interface Cards, 6-48
PCSA for OS/2 performance guidelines
configuration and methods, B-8
task-to-task communications, B-9
Performance guidelines, B-1
Data Transfer Facility, B-34
DECnet communications software, B-2
DECnet System Services, B-18
Digital Internet interconnect, B-39
Digital to IBM interconnect product, B-33
OSI applications, B-15
router, B-11
Phase IV network terms, A-1
Presentation modules, 8-9
PrintServer 40 *plus*, 2-144
PrintServer family, 2-141
Private Leased Telecommunications Network (PLTN) Modems, 4-58
ProNET-4/16
AT Network Interface Card, 5-36
EISA Network Interface Card, 5-38
MicroChannel Network Interface Card, 5-37
UTP Media Filter, 5-39, 5-40
PSI access, 5-11, 5-13

Q

Q-bus, 4-16

R

Remote System Manager, 7-11
configuration, 7-11
Repeaters
DECrepeater 200, 2-42, 2-91
DECrepeater 350 (DETPR), 2-32
DECrepeater 90C, 2-36
DECrepeater 90T, 2-31
Fiber Optic IEEE 802.3/Ethernet Repeater (DEREN), 2-42
ThinWire Ethernet Multiport Repeater (DEMPR), 2-38
ThinWire Ethernet Singleport Repeater (DESPR), 2-39
ThinWire Ethernet Station Adapter DECextender 204 (DESTA), 2-46
Retix OpenServer 400, 7-45
Router performance guidelines
DEC X25router 2000, B-14
DECrouter 250, B-11
Routers
DEC ISDNrouter 100, 2-178
DEC MicroServer, 2-163
DEC MicroServer-SP, 2-155
DEC WANrouter 250, 2-159
DEC WANrouter 500, 2-163
DEC X.25 Access for ULTRIX, 5-136
DEC X25gateway 100, 2-156
DEC X25gateway 500, 2-166
DEC X25router 100, 2-158
DEC X25router 2000, 2-169
DECNIS 500, 2-176
DECNIS 600, 2-171
DECrouter 2000, 2-91
DECrouter 250, 2-162
Summary Chart, 2-150
X25router 2000, DEC MicroServer (DEMSA), 2-169
RSM. *See* Remote System Manage
RSX-11M/RSX-11M-PLUS RJE/HASP Emulator, 5-122

S

Scholar Plus Modem, 4-58
Series 70
  External Power Supplies, 5-58
  Group Power Supply, 5-57
  STP and UTP MAU, 5-53
  Unit Power Supplies, 5-56
  WWC, 5-55
Servers, 2-5, 2-108
  DEC ACCESSWORKS, 2-134
  DEC Commserver (DSPAA/DSPAB), 2-130
  DECserver 250, 2-121
  DECserver 700, 2-113
  DECserver 90L+, 2-119
  DECserver 90TL, 2-116
  IEEE 802.3/Ethernet communications servers, 2-6
  InfoServer 150, 2-139
  MUXserver 300/310/380/DECmux 300 Remote Terminal Server, 2-123
  PrintServer 40 *plus*, 2-144
  PrintServer family, 2-141
  Summary chart, 2-109
  Terminal Server Manager (TSM), 2-128
  turbo PrintServer 20, 2-144
Shielded twisted-pair cabling (IBM), 2-56
Simple Mail, 7-63
SNMP/Token Ring Proxy Agent, 8-35
Software
  development tools, 5-150
  installation services, 9-8
  order code template, 5-2
  ordering information, 5-1
Special purpose servers, 2-134
  DEC ACCESSWORKS, 2-134
  InfoServer 150, 2-139
  PrintServer family, 2-141
    PrintServer 40 *plus*, 2-144
    turbo PrintServer 20, 2-144
Special server performance guidelines, DEC ACCESSWORKS, B-32
SQL Access Server for Rdb/VMS, 5-115
Standard baseband 802.3/Ethernet cabling, 2-3, 2-24
Standard thick wire coaxial cabling, 2-58
StrataCom IPX Transmission Resource Manager, 4-50
Structured Wiring Architecture, 2-50
System controllers, 2-79

T

TeamLinks for PATHWORKS, 6-36
TeamRoute, 7-19
Terminal connections, 2-58
Terminal Server Manager (TSM), 2-128, 8-17
  terminal server overview, 2-110
Terminal-connection components, 2-68
ThinWire 802.3/Ethernet cabling, 2-4, 2-27, 2-56
ThinWire 802.3/Ethernet LAN
  configuration guidelines, A-23
  connected departmental configuration, A-22
  connectivity reference table, A-24
  OPEN DECconnect ThinWire configuration, A-24
  planning, A-21
  small workgroup configuration, A-21
  standalone departmental configuration, A-22
ThinWire Ethernet Multiport Repeater (DEMPR), 2-38
ThinWire Ethernet Singleport Repeater (DESPR), 2-39
ThinWire Ethernet Station Adapter DECextender 204 (DESTA), 2-46
Token Ring Products. *See* 802.5/Token Ring
TokenVIEW Plus, 8-34
Training courses, 9-4
Transceiver, 2-19
Transceiver cable, 2-25
TransLAN 320, 2-104
TransLAN 335, 2-104
TransLAN 350, 2-104
TransLAN Extended LANs, 2-91
TransLAN III, 2-104
Transmission Resource Management Systems, 4-50
  StrataCom IPX Transmission Resource Manager, 4-50
TransPATH 335, 2-179
TransPATH 350, 2-179
Troubleshooting networks, D–5
turbo PrintServer 20, 2-144

U

ULTRIX FTAM
  measurement metrics, B-15
  performance guidelines, B-15
  performance on DECstation 3100, B-15
  performance on VAXserver 3600, B-17
ULTRIX Mail Connection, 7-40

ULTRIX SNA Server, 5-82
ULTRIX-TCP/IP and NFS, 5-25
Unshielded twisted-pair 802.3 LAN
    planning, A-18
    small workgroup configuration, A-19
    unshielded twisted-pair 10BaseT connected departmental configuration, A-20
    unshielded twisted-pair/10BaseT configuration guidelines, A-20
    workgroup/departmental configurations, A-19
Unshielded twisted-pair cabling, 2-55
Unshielded Twisted-Pair Media Access Unit (H3350), 2-33
User Agents, 7-62
    ALL–IN–1 DESKtop Server for VMS, 7-84
    ALL–IN–1 Integrated Office System (IOS), 7-78
    DEC MAILworks, 7-64
    electronic messaging topology, 7-63
    Simple Mail, 7-63

V

VAX 2780/3780 Protocol Emulator, 5-120
VAX 3271 Protocol Emulator, 5-121
VAX Business-Integration Gateway, 5-84
VAX DEC/MAP, 5-142
VAX Distributed File Service, 7-3
    configuration, 7-4
    prerequisite software, 7-5
VAX Distributed Queueing Service, 7-5
    configuration, 7-6
VAX ISDN Access Software, 5-154
VAX ISDN Software, 5-152
VAX Message Router, 7-35
    Programmer's Kit, 7-44
    VMSmail Gateway, 7-39
    X.400 Gateway, 7-37
VAX Message Router/P Gateway, 7-42
VAX Message Router/S Gateway, 7-41
VAX Notes, 7-14
VAX P.S.I., 5-131
VAX P.S.I. Access, 5-132
VAX Public Access Communications (VAXPAC), 5-146
VAX VMS Computer Integrated Telephony Applications Interface, computer integrated telephony configuration, 7-26
VAXBI, 4-4
VAXft Communications Controllers, 4-12
    DEC WANcontroller 620, 4-12
VICfax, 7-14
VIDA for DB2, 5-113
VMS SNA, 5-80
VOICEmail for VAX VMS Systems, 7-26
VOTS, 5-11, 5-13
VT, 5-13
VTERM II, poly-COM 220, and poly-COM 240 for the IBM PC/XT/AT, 5-147

W

WAN device drivers, 5-11, 5-13
WANDD, 5-11, 5-13
WIN/TCP, WIN/TCP DDN, and WIN/TCP SCI, 5-29
Wiring Hubs
    DECagent 90, 2-74
    DEChub 90, 2-73
    HUBwatch for DECmcc MSU, 2-74
    HUBwatch for Windows, 2-74
WPS-PLUS/PC, 5-149

X

X.25 Link Level Software, 5-152
X.25 Packet Switching Support for ULTRIX, 5-135
X.400, MAIL User Agent on UNIX, Alfalfa POSTE, 7-91
X.400 model, Digital's implementation, 7-33, 7-50

Digital Reference Service

The Digital Reference Service (DRS) is a corporate information service that delivers current information about all Digital systems, Digital and third-party software, networking products, customer support services, sales channels, prices, and corporate directions. The full DRS literature set is sent directly to subscribers and includes seven binders for convenient bookshelf access. Updated material is sent every six weeks. This convenient desktop library includes:

- Systems and Options Catalogs
  - *VAX Systems/DECsystems Systems and Options Catalog*
  - *PDP Systems and Options Catalog*
  - *Realtime Systems and Options Catalog*
  - *Networks and Communications (NaC) Buyer's Guide*
- Complete set of updated Software Product Descriptions in book form or on CD-ROM (CD-ROM is available only for VMS operating systems)
- Special DRS books
  - *Doing Business with Digital*
  - *Systems*
  - *Services*
  - *Applications/Solutions*
- *VAX VMS & ULTRIX Software Source Books*
- Plus:
  - Annual Report
  - *DECdirect Catalog*
  - *U.S. Systems Price List*
  - *DECdirect Desktop Edition Catalog*
  - *DECdirect Software Edition Catalog*
  - *Educational Services Course Descriptions and Training Schedule*
  - *Product INSIGHT Magazine*
  - *Software Documentation Products Catalog*
  - Subscriber Memo with highlights on new products
  - New major Product Information Sheets, brochures, and handbooks
  - Quick phone index
- Easy-to-use directory of indexes
- A free set of executive-style binders when you subscribe

To learn more about the DRS, call Digital Reference Service Customer Service in the U.S. at (508) 467-4566. Be sure to ask about multiyear discount subscription rates.

Ordering Information

To order the Digital Reference Service, call the DECdirect telephone ordering and information service in the U.S. at **1-800-DIGITAL** *or* complete this form and send it with your payment to DECdirect Catalog, Digital Equipment Corporation, P.O. Box CS2008, Nashua, NH 03061.

☐ Please enter my annual **subscription(s)** to the *Digital Reference Service*, part #ED-23800-18/JY, (with SPDs on hard copy), at the annual cost of $450/year each.

☐ Please enter my annual **subscription(s)** to the *Digital Reference Service*, part #ED-00896-18/JY, (with SPDs on CD-ROM for VMS operating system), at the annual cost of $485/year each.

Method of Payment

☐ Check enclosed ☐ Purchase order enclosed ☐ Visa/MasterCard No.:_____ Exp. Date: _____

Allow up to 6 weeks for delivery. The stated subscription rates are valid in the U.S. only and subject to change without notice.

Mr./Mrs./Ms _____

Title _____

Firm _____

Address _____

City _____

State _____ Zip _____ Telephone _____

Your comments and suggestions will assist us in our continous effort to improve the quality and usefulness of this catalog. Please take a few moments to answer the questions below. Thank you.

1. Of the following areas, please check the one(s) you found most useful:

☐ Organization of Information	☐ Configuration Information	☐ Description of Hardware Options
☐ Technical/Information	☐ Layout and Format	☐ Description of Software Options
☐ Diagrams and Charts	☐ Description of Services	

2. What can we do to improve upon any of the items above?

_____

_____

3. Did you find any errors? Please be specific and note section, page numbers, paragraph(s).

_____

_____

_____

4. Was there any information you thought should have been included but was not found? Please describe.

_____

_____

_____

5. Does this document satisfy your particular needs (i.e., configurations, recent and available options, etc.)?

_____

_____

_____

6. Would you like to see this catalog on CD-ROM? _____

Do not send requests to be added to mailing lists, or to receive copies of current or future catalogs. This card is for comments and suggestions only. Contact your local sales office to receive catalogs.

Name _____ Title _____

Company _____

Department _____

Address _____

City _____ State _____ Zip _____

Note: If you are a Digital Sales Representative, please give your DTN number. _____

DO NOT CUT – FOLD HERE AND TAPE

digital™

NO POSTAGE
NECESSARY
IF MAILED IN THE
UNITED STATES

BUSINESS REPLY MAIL
FIRST–CLASS MAIL PERMIT NO. 33 MAYNARD, MA

POSTAGE WILL BE PAID BY ADDRESSEE

Telecommunications and Networks Publications
DIGITAL EQUIPMENT CORPORATION
550 King Street
Littleton, MA 01460-1289

DO NOT CUT – FOLD HERE

CUT ON THIS LINE

Digital: The Performance Leader in Open Networks

digital

Ordering From the Networks Buyer's Guide

To place an order in the U.S., call 800 DIGITAL (800 344-4825) between 8:30 a.m. to 6:00 p.m. Eastern Standard Time.

International customers should contact their local sales office or DECdirect office.

Refer to "Ordering Information" in the preface for additional ordering information and a list of European DECdirect offices.

Buyer's Guide Networks Buyer's Guide Networks Buyer
Networks Buyer's Guide Networks Buyer's Guide Netwo
Buyer's Guide Networks Buyer's Guide Networks Buyer